Touch I/O Flash MCU

BS83B04A-4
BS83B08A-3/BS83B08A-4
BS83B12A-3/BS83B12A-4
BS83B16A-3/BS83B16A-4

Revision: V2.00 Date: May 06, 2026

www.holtek.com

Table of Contents

Features **5**
CPU Features 5
Peripheral Features 5
General Description **6**
Selection Table **6**
Block Diagram **7**
Pin Assignment **7**
Pin Descriptions **8**
Absolute Maximum Ratings **12**
D.C. Characteristics **12**
A.C. Characteristics **14**
Power-on Reset Characteristics **15**
System Architecture **16**
Clocking and Pipelining 16
Program Counter 17
Stack 18
Arithmetic and Logic Unit – ALU 18
Flash Program Memory **19**
Structure 19
Special Vectors 19
Look-up Table 19
Table Program Example 20
In Circuit Programming 21
On-Chip Debug Support – OCDS 22
RAM Data Memory **23**
Structure 23
Special Function Register Description **23**
Indirect Addressing Registers – IAR0, IAR1 23
Memory Pointers – MP0, MP1 28
Bank Pointer – BP 28
Accumulator – ACC 29
Program Counter Low Register – PCL 29
Look-up Table Registers – TBLP, TBHP, TBLH 29
Status Register – STATUS 30
EEPROM Data Memory **32**
EEPROM Data Memory Structure 32
EEPROM Registers 32
Reading Data from the EEPROM 34
Writing Data to the EEPROM 34

Write Protection 34
EEPROM Interrupt 34
Programming Considerations 35

Oscillators 36
Oscillator Overview 36
System Clock Configurations 36
Internal RC Oscillator – HIRC 37
Internal 32kHz Oscillator – LIRC 37

Operating Modes and System Clocks 38
System Clocks 38
System Operation Modes 38
Control Register 40
Operating Mode Switching 43
Standby Current Considerations 46
Wake-up 47
Programming Considerations 47

Watchdog Timer 48
Watchdog Timer Clock Source 48
Watchdog Timer Control Register 48
Watchdog Timer Operation 50

Reset and Initialisation 51
Reset Functions 51
Reset Initial Conditions 54

Input/Output Ports 61
Pull-high Resistors 62
Port A Wake-up 63
I/O Port Control Registers 64
Pin-shared Functions 65
I/O Pin Structures 66
Programming Considerations 66

Timer/Event Counter 67
Configuring the Timer/Event Counter Input Clock Source 67
Timer Register – TMR 67
Timer Control Register – TMRC 68
Timer Operation 68
Prescaler 69
Programming Considerations 69

Touch Key Function 69
Touch Key Structure 69
Touch Key Register Definition 70
Touch Key Operation 77
Touch Key Interrupt 79
Programming Considerations 79

Serial Interface Module – SIM 80
SPI Interface 80
I²C Interface 86
Interrupts 97
Interrupt Registers 97
Interrupt Operation 100
External Interrupt 102
Time Base Interrupt 102
Timer/Event Counter Interrupt 103
EEPROM Interrupt 103
Touch Key Interrupt 103
SIM Interrupt (except BS83B04A-4) 103
I²C Interrupt (BS83B04A-4) 104
Interrupt Wake-up Function 104
Programming Considerations 104
Application Circuits 105
Instruction Set 106
Introduction 106
Instruction Timing 106
Moving and Transferring Data 106
Arithmetic Operations 106
Logical and Rotate Operation 107
Branches and Control Transfer 107
Bit Operations 107
Table Read Operations 107
Other Operations 107
Instruction Set Summary 108
Table Conventions 108
Instruction Definition 110
Package Information 119
8-pin SOP (150mil) Outline Dimensions 120
10-pin MSOP Outline Dimensions 121
16-pin NSOP (150mil) Outline Dimensions 122
16-pin SSOP (150mil) Outline Dimensions 123
20-pin SOP (300mil) Outline Dimensions 124
20-pin SSOP (150mil) Outline Dimensions 125
24-pin SOP (300mil) Outline Dimensions 126
24-pin SSOP (150mil) Outline Dimensions 127

Note that the BS83B12A-4/BS83B16A-4 devices, although mentioned in this datasheet, have already been phased out and are presently no longer available.

Features

CPU Features

- Operating Voltage
  - For BS83B04A-4
    - f_{SYS}=8MHz: 2.2V~5.5V
  - For BS83B08A-3/BS83B12A-3/BS83B16A-3
    - f_{SYS}=8MHz: 2.7V~5.5V
    - f_{SYS}=12MHz: 2.7V~5.5V
    - f_{SYS}=16MHz: 4.5V~5.5V
  - For BS83B08A-4/BS83B12A-4/BS83B16A-4
    - f_{SYS}=8MHz: 2.2V~5.5V
    - f_{SYS}=12MHz: 2.7V~5.5V
    - f_{SYS}=16MHz: 4.5V~5.5V
- Up to 0.25μs instruction cycle with 16MHz system clock at V_{DD}=5V
- Fully integrated 4/8/12/16 touch key functions -- require no external components
- Power down and wake-up functions to reduce power consumption
- Fully integrated low and high speed internal oscillators
- Low Speed -- 32kHz
- High speed -- 8MHz, 12MHz, 16MHz
- Multi-mode operation: NORMAL, SLOW, IDLE and SLEEP
- All instructions executed in one or two instruction cycles
- Table read instructions
- 61 powerful instructions
- Up to 4-level subroutine nesting
- Bit manipulation instruction

Peripheral Features

- Flash Program Memory: 2K×16
- RAM Data Memory: 128×8~288×8
- True EEPROM Memory: 32×8~64×8
- Watchdog Timer function
- Up to 22 bidirectional I/O lines
- External interrupt line shared with I/O pin
- Single 8-bit Timer/Event Counter
- Single Time-Base function for generation of fixed time interrupt signals
- I^2C for all devices and SPI interface for the devices except BS83B04A-4
- Low voltage reset function
- 4/8/12/16 touch key functions
- High current LED driver

General Description

These devices are a series of Flash Memory type 8-bit high performance RISC architecture microcontrollers with fully integrated touch key functions. With all touch key functions provided internally and with the convenience of Flash Memory multi-programming features, this device range has all the features to offer designers a reliable and easy means of implementing Touch Keys within their products applications.

The touch key functions are fully integrated completely eliminating the need for external components. In addition to the flash program memory, other memory includes an area of RAM Data Memory as well as an area of true EEPROM memory for storage of non-volatile data such as serial numbers, calibration data etc. Protective features such as an internal Watchdog Timer and Low Voltage Reset functions coupled with excellent noise immunity and ESD protection ensure that reliable operation is maintained in hostile electrical environments.

All devices include fully integrated low and high speed oscillators which require no external components for their implementation. The ability to operate and switch dynamically between a range of operating modes using different clock sources gives users the ability to optimise microcontroller operation and minimise power consumption. Easy communication with the outside world is provided using the internal I^2C and SPI interfaces, while the inclusion of flexible I/O programming features, Timer/Event Counters and many other features further enhance device functionality and flexibility.

These touch key devices will find excellent use in a huge range of modern Touch Key product applications such as instrumentation, household appliances, electronically controlled tools to name but a few.

Selection Table

Most features are common to all devices, the main distinguishing feature is the number of I/Os and Touch Keys. The following table summarises the main features of each device.

Part No.	Internal Clock	V_{DD}	System Clock	Program Memory	Data Memory	Data EEPROM	I/O	High Current LED Output	8-bit Timer	Time Base	Touch Key	SPI/ I^2C	LVR	Stack	Package	Marking
BS83B04A-4	8MHz	2.2V~ 5.5V	8MHz	2K×16	128×8	32×8	8	—	1	1	4	1	2.10V	4	8SOP 10MSOP	BS83B04A-4 (for 8SOP) 83B04A4 (for 10MSOP)
BS83B08A-3	8MHz 12MHz 16MHz	2.7V~ 5.5V	8MHz~ 16MHz	2K×16	160×8	64×8	14	—	1	1	8	1	2.55V	4	16NSOP 16SSOP	—
BS83B08A-4	8MHz 12MHz 16MHz	2.2V~ 5.5V	8MHz~ 16MHz	2K×16	160×8	64×8	14	—	1	1	8	1	2.10V	4	16NSOP 16SSOP	—
BS83B12A-3	8MHz 12MHz 16MHz	2.7V~ 5.5V	8MHz~ 16MHz	2K×16	288×8	64×8	18	18	1	1	12	1	2.55V	4	20SOP 20SSOP	—
BS83B12A-4	8MHz 12MHz 16MHz	2.2V~ 5.5V	8MHz~ 16MHz	2K×16	288×8	64×8	18	18	1	1	12	1	2.10V	4	20SOP 20SSOP	—
BS83B16A-3	8MHz 12MHz 16MHz	2.7V~ 5.5V	8MHz~ 16MHz	2K×16	288×8	64×8	22	22	1	1	16	1	2.55V	4	24SOP 24SSOP	—
BS83B16A-4	8MHz 12MHz 16MHz	2.2V~ 5.5V	8MHz~ 16MHz	2K×16	288×8	64×8	22	22	1	1	16	1	2.10V	4	24SOP 24SSOP	—

Block Diagram

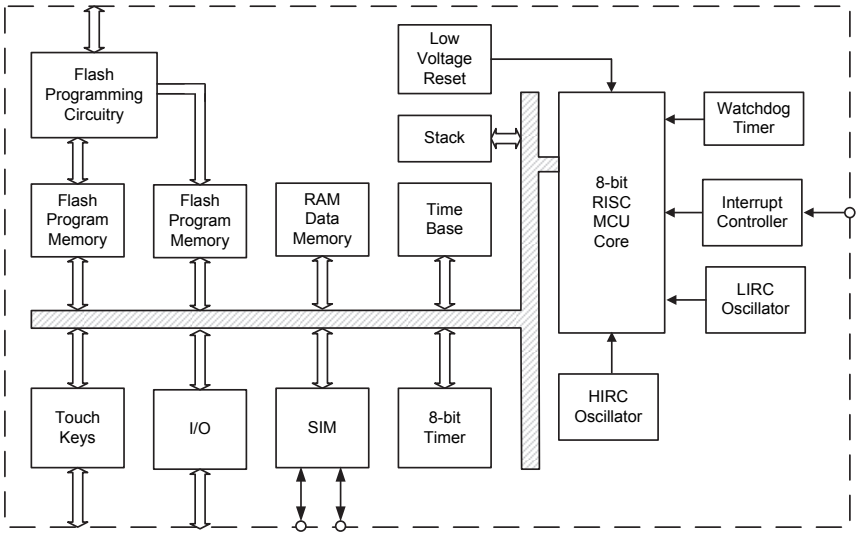

Note: SPI for all devices except BS83B04A-4.

Pin Assignment

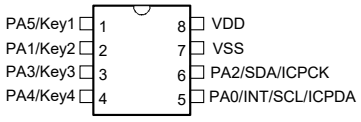

BS83B04A-4
8 SOP-A

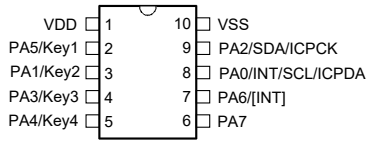

BS83B04A-4
10 MSOP-A

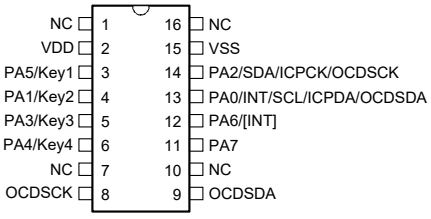

BS83BV04A
16 NSOP-A

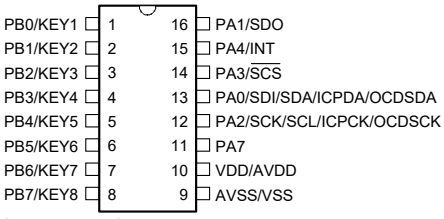

BS83B08A-3/BS83B08A-4/83V08AV15
16 NSOP-A/SSOP-A

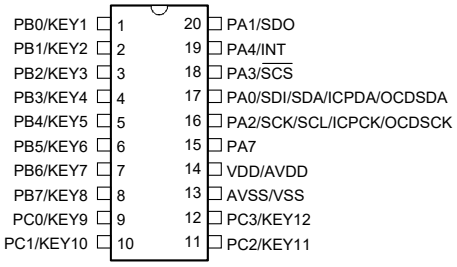

BS83B12A-3/BS83B12A-4/BS83V12A
20 SOP-A/SSOP-A

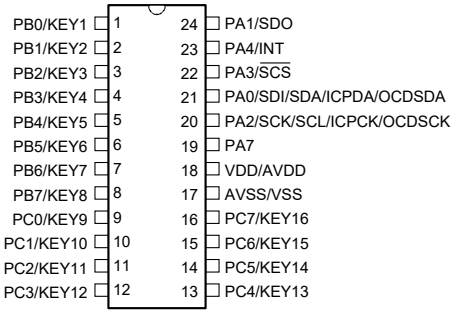

BS83B16A-3/BS83B16A-4/BS83V16A
24 SOP-A/SSOP-A

Note: The OCDSDA and OCDSCK pins are used for OCDS function while the ICPDA and ICPCK pins are used for ICP function.

Pin Descriptions

The function of each pin is listed in the following tables, however the details behind how each pin is configured is contained in other sections of the datasheet.

BS83B04A-4

Pin Name	Function	OPT	I/T	O/T	Description
PA0/INT/SCL/ ICPDA/OCDSDA	PA0	PAWU PAPU	ST	CMOS	General purpose I/O. Register enabled pull-up and wake-up
	INT	SFS	ST	—	External interrupt
	SCL	IICC0	ST	NMOS	I²C clock
	ICPDA	—	ST	CMOS	In-circuit programming address/data pin
	OCDSDA	—	ST	CMOS	On-chip debug support data/address pin, for EV chip only.
PA1/KEY2	PA1	PAWU PAPU	ST	CMOS	General purpose I/O. Register enabled pull-up and wake-up
	KEY2	TKM0C1	NSI	—	Touch key inputs
PA2/SDA/ ICPCK/OCDSCK	PA2	PAWU PAPU	ST	CMOS	General purpose I/O. Register enabled pull-up and wake-up
	SDA	—	ST	NMOS	I²C data
	ICPCK	—	ST	—	In-circuit programming clock pin
	OCDSCK	—	ST	—	On-chip debug support clock pin, for EV chip only.
PA3/KEY3	PA3	PAWU PAPU	ST	CMOS	General purpose I/O. Register enabled pull-up and wake-up
	KEY3	TKM0C1	NSI	—	Touch key inputs
PA4/KEY4	PA4	PAWU PAPU	ST	CMOS	General purpose I/O. Register enabled pull-up and wake-up
	KEY4	TKM0C1	NSI	—	Touch key inputs
PA5/KEY1	PA5	PAWU PAPU	ST	CMOS	General purpose I/O. Register enabled pull-up and wake-up
	KEY1	TKM0C1	NSI	—	Touch key inputs
PA6/[INT]	PA6	PAWU PAPU	ST	CMOS	General purpose I/O. Register enabled pull-up and wake-up
	INT	SFS	ST	—	External interrupt
PA7	PA7	PAWU PAPU	ST	CMOS	General purpose I/O. Register enabled pull-up and wake-up
VDD	VDD	—	PWR	—	Power supply *
VSS	VSS	—	PWR	—	Ground **

Note: I/T: Input type; O/T: Output type
OP: Optional by register selection; PWR: Power
ST: Schmitt Trigger input; CMOS: CMOS output
NMOS: NMOS output; NSI: Non-standard input

*: VDD is the device power supply while AVDD is the touch key circuit power supply. The AVDD pin is bonded together internally with VDD.

**: VSS is the device ground pin while AVSS is the touch key circuit ground pin. The AVSS pin is bonded together internally with VSS.

BS83B08A-3/BS83B08A-4

Pin Name	Function	OPT	I/T	O/T	Description
PA0/SDI/ SDA/ICPDA/ OCDSDA	PA0	PAWU PAPU	ST	CMOS	General purpose I/O. Register enabled pull-up and wake-up
	SDI	—	ST	—	SPI data input
	SDA	—	ST	NMOS	I²C data
	ICPDA	—	ST	CMOS	In-circuit programming address/data pin
	OCDSDA	—	ST	CMOS	On-chip debug support data/address pin, for EV chip only.
PA1/SDO	PA1	PAWU PAPU	ST	CMOS	General purpose I/O. Register enabled pull-up and wake-up
	SDO	SIMC0	—	CMOS	SPI data output
PA2/SCK/ SCL/ICPCK/ OCDSCK	PA2	PAWU PAPU	ST	CMOS	General purpose I/O. Register enabled pull-up and wake-up
	SCK	SIMC0	ST	CMOS	SPI serial clock
	SCL	SIMC0	ST	NMOS	I²C clock
	ICPCK	—	ST	—	In-circuit programming clock pin
	OCDSCK	—	ST	—	On-chip debug support clock pin, for EV chip only.
PA3/$\overline{SCS}$	PA3	PAWU PAPU	ST	CMOS	General purpose I/O. Register enabled pull-up and wake-up
	$\overline{SCS}$	SIMC0	ST	CMOS	SPI slave select
PA4/INT	PA4	PAWU PAPU	ST	CMOS	General purpose I/O. Register enabled pull-up and wake-up
	INT	INTEG	ST	—	External interrupt
PA7	PA7	PAWU PAPU	ST	CMOS	General purpose I/O. Register enabled pull-up and wake-up
PB0/KEY1~ PB3/KEY4	PB0~PB3	PBPU	ST	CMOS	General purpose I/O. Register enabled pull-up
	KEY1~KEY4	TKM0C1	NSI	—	Touch key inputs
PB4/KEY5~ PB7/KEY8	PB4~PB7	PBPU	ST	CMOS	General purpose I/O. Register enabled pull-up
	KEY5~ KEY8	TKM1C1	NSI	—	Touch key inputs
VDD	VDD	—	PWR	—	Power supply *
AVDD	AVDD	—	PWR	—	Touch Key Circuit PWR and it should be double bonded to VDD*
VSS	VSS	—	PWR	—	Ground **
AVSS	AVSS	—	PWR	—	Touch Key Circuit PWR and it should be double bonded to VSS**

Note: I/T: Input type; O/T: Output type
OP: Optional by register selection; PWR: Power
ST: Schmitt Trigger input; CMOS: CMOS output
NMOS: NMOS output; NSI: Non-standard input

*: VDD is the device power supply while AVDD is the touch key circuit power supply. The AVDD pin is bonded together internally with VDD.

**: VSS is the device ground pin while AVSS is the touch key circuit ground pin. The AVSS pin is bonded together internally with VSS.

BS83B12A-3/BS83B12A-4

Pin Name	Function	OPT	I/T	O/T	Description
PA0/SDI/SDA/ICPDA/OCDSDA	PA0	PAWU PAPU	ST	CMOS	General purpose I/O. Register enabled pull-up and wake-up
	SDI	—	ST	—	SPI data input
	SDA	—	ST	NMOS	I²C data
	ICPDA	—	ST	CMOS	In-circuit programming address/data pin
	OCDSDA	—	ST	CMOS	On-chip debug support data/address pin, for EV chip only.
PA1/SDO	PA1	PAWU PAPU	ST	CMOS	General purpose I/O. Register enabled pull-up and wake-up
	SDO	SIMC0	—	CMOS	SPI data output
PA2/SCK/SCL/ICPCK/OCDSCK	PA2	PAWU PAPU	ST	CMOS	General purpose I/O. Register enabled pull-up and wake-up
	SCK	SIMC0	ST	CMOS	SPI serial clock
	SCL	SIMC0	ST	NMOS	I²C clock
	ICPCK	—	ST	—	In-circuit programming clock pin
	OCDSCK	—	ST	—	On-chip debug support clock pin, for EV chip only.
PA3/$\overline{SCS}$	PA3	PAWU PAPU	ST	CMOS	General purpose I/O. Register enabled pull-up and wake-up
	$\overline{SCS}$	SIMC0	ST	CMOS	SPI slave select
PA4/INT	PA4	PAWU PAPU	ST	CMOS	General purpose I/O. Register enabled pull-up and wake-up
	INT	INTEG	ST	—	External interrupt
PA7	PA7	PAWU PAPU	ST	CMOS	General purpose I/O. Register enabled pull-up and wake-up
PB0/KEY1~PB3/KEY4	PB0~PB3	PBPU	ST	CMOS	General purpose I/O. Register enabled pull-up
	KEY1~KEY4	TKM0C1	NSI	—	Touch key inputs
PB4/KEY5~PB7/KEY8	PB4~PB7	PBPU	ST	CMOS	General purpose I/O. Register enabled pull-up
	KEY5~KEY8	TKM1C1	NSI	—	Touch key inputs
PC0/KEY9~PC3/KEY12	PC0~PC3	PCPU	ST	CMOS	General purpose I/O. Register enabled pull-up
	KEY9~KEY12	TKM2C1	NSI	—	Touch key inputs
VDD	VDD	—	PWR	—	Power supply *
AVDD	AVDD	—	PWR	—	Touch Key Circuit PWR and it should be double bonded to VDD*
VSS	VSS	—	PWR	—	Ground **
AVSS	AVSS	—	PWR	—	Touch Key Circuit PWR and it should be double bonded to VSS**

Note: I/T: Input type; O/T: Output type
OP: Optional by register selection; PWR: Power
ST: Schmitt Trigger input; CMOS: CMOS output
NMOS: NMOS output; NSI: Non-standard input

*: VDD is the device power supply while AVDD is the touch key circuit power supply. The AVDD pin is bonded together internally with VDD.

**: VSS is the device ground pin while AVSS is the touch key circuit ground pin. The AVSS pin is bonded together internally with VSS.

BS83B16A-3/BS83B16A-4

Pin Name	Function	OPT	I/T	O/T	Description
PA0/SDI/SDA/ICPDA/OCDSDA	PA0	PAWU PAPU	ST	CMOS	General purpose I/O. Register enabled pull-up and wake-up
	SDI	—	ST	—	SPI data input
	SDA	—	ST	NMOS	I²C data
	ICPDA	—	ST	CMOS	In-circuit programming address/data pin
	OCDSDA	—	ST	CMOS	On-chip debug support data/address pin, for EV chip only.
PA1/SDO	PA1	PAWU PAPU	ST	CMOS	General purpose I/O. Register enabled pull-up and wake-up
	SDO	SIMC0	—	CMOS	SPI data output
PA2/SCK/SCL/ICPCK/OCDSCK	PA2	PAWU PAPU	ST	CMOS	General purpose I/O. Register enabled pull-up and wake-up
	SCK	SIMC0	ST	CMOS	SPI serial clock
	SCL	SIMC0	ST	NMOS	I²C clock
	ICPCK	—	ST	—	In-circuit programming clock pin
	OCDSCK	—	ST	—	On-chip debug support clock pin, for EV chip only.
PA3/$\overline{SCS}$	PA3	PAWU PAPU	ST	CMOS	General purpose I/O. Register enabled pull-up and wake-up
	$\overline{SCS}$	SIMC0	ST	CMOS	SPI slave select
PA4/INT	PA4	PAWU PAPU	ST	CMOS	General purpose I/O. Register enabled pull-up and wake-up
	INT	INTEG	ST	—	External interrupt
PA7	PA7	PAWU PAPU	ST	CMOS	General purpose I/O. Register enabled pull-up and wake-up
PB0/KEY1~PB3/KEY4	PB0~PB3	PBPU	ST	CMOS	General purpose I/O. Register enabled pull-up
	KEY1~KEY4	TKM0C1	NSI	—	Touch key inputs
PB4/KEY5~PB7/KEY8	PB4~PB7	PBPU	ST	CMOS	General purpose I/O. Register enabled pull-up
	KEY5~KEY8	TKM1C1	NSI	—	Touch key inputs
PC0/KEY9~PC3/KEY12	PC0~PC3	PCPU	ST	CMOS	General purpose I/O. Register enabled pull-up
	KEY9~KEY12	TKM2C1	NSI	—	Touch key inputs
PC4/KEY13~PC7/KEY16	PC4~PC7	PCPU	ST	CMOS	General purpose I/O. Register enabled pull-up
	KEY13~KEY16	TKM3C1	NSI	—	Touch key inputs
VDD	VDD	—	PWR	—	Power supply *
AVDD	AVDD	—	PWR	—	Touch Key Circuit PWR and it should be double bonded to VDD*
VSS	VSS	—	PWR	—	Ground **
AVSS	AVSS	—	PWR	—	Touch Key Circuit PWR and it should be double bonded to VSS**

Note: I/T: Input type; O/T: Output type
OP: Optional by register selection; PWR: Power
ST: Schmitt Trigger input; CMOS: CMOS output
NMOS: NMOS output; NSI: Non-standard input

*: VDD is the device power supply while AVDD is the touch key circuit power supply. The AVDD pin is bonded together internally with VDD.

**: VSS is the device ground pin while AVSS is the touch key circuit ground pin. The AVSS pin is bonded together internally with VSS.

Absolute Maximum Ratings

Supply Voltage ..... V_{SS}−0.3V to V_{SS}+6.0V
Input Voltage ..... V_{SS}−0.3V to V_{DD}+0.3V
Storage Temperature..... -60°C to 150°C
Operating Temperature..... -40°C to 85°C
I_{OH} Total ..... -80mA
I_{OL} Total 80mA
Total Power Dissipation 500mW

Note: These are stress ratings only. Stresses exceeding the range specified under "Absolute Maximum Ratings" may cause substantial damage to the device. Functional operation of this device at other conditions beyond those listed in the specification is not implied and prolonged exposure to extreme conditions may affect device reliability.

D.C. Characteristics

Ta=25°C

Symbol	Parameter	Test Conditions		Min.	Typ.	Max.	Unit
		V_{DD}	Conditions				
V_{DD}	Operating Voltage (HIRC) (BS83B08A-3/BS83B12A-3/ BS83B16A-3)	—	f_{SYS}=8MHz	2.7	—	5.5	V
			f_{SYS}=12MHz	2.7	—	5.5	V
			f_{SYS}=16MHz	4.5	—	5.5	V
	Operating Voltage (HIRC) (BS83B08A-4/BS83B12A-4/ BS83B16A-4)	—	f_{SYS}=8MHz	2.2	—	5.5	V
			f_{SYS}=12MHz	2.7	—	5.5	V
			f_{SYS}=16MHz	4.5	—	5.5	V
	Operating Voltage (HIRC) (BS83B04A-4)	—	f_{SYS}=8MHz	2.2	—	5.5	V
I_{DD1}	Operating Current (HIRC, $f_{SYS}=f_H$, $f_S=f_{SUB}=f_{LIRC}$) (BS83B08A-3/BS83B12A-3/ BS83B16A-3/BS83B08A-4/ BS83B12A-4/BS83B16A-4)	3V	No load, f_H=8MHz, WDT enable	—	1.2	1.8	mA
		5V		—	2.2	3.3	mA
		3V	No load, f_H=12MHz, WDT enable	—	1.6	2.4	mA
		5V		—	3.3	5.0	mA
		5V	No load, f_H=16MHz, WDT enable	—	4.0	6.0	mA
	Operating Current (HIRC, $f_{SYS}=f_H$, $f_S=f_{SUB}=f_{LIRC}$) (BS83B04A-4)	3V	No load, f_H=8MHz, WDT enable	—	0.8	1.2	mA
		5V		—	1.6	2.4	mA
I_{DD2}	Operating Current (HIRC, $f_{SYS}=f_L$, $f_S=f_{SUB}=f_{LIRC}$)	3V	No load, f_H=12MHz, $f_L=f_H/2$, WDT enable	—	1.2	2.0	mA
		5V		—	2.2	3.3	mA
		3V	No load, f_H=12MHz, $f_L=f_H/4$, WDT enable	—	1.0	1.5	mA
		5V		—	1.8	2.7	mA
		5V	No load, f_H=12MHz, $f_L=f_H/8$, WDT enable	—	0.9	1.4	mA
		3V		—	1.6	2.4	mA
		3V	No load, f_H =12MHz, $f_L=f_H/16$, WDT enable	—	0.8	1.2	mA
		5V		—	1.5	2.3	mA
		3V	No load, f_H=12MHz, $f_L=f_H/32$, WDT enable	—	0.8	1.2	mA
		5V		—	1.5	2.3	mA
		5V	No load, f_H=12MHz, $f_L=f_H/64$, WDT enable	—	0.8	1.2	mA
		3V		—	1.5	2.3	mA

Symbol	Parameter	Test Conditions		Min.	Typ.	Max.	Unit
		V_{DD}	Conditions				
I_{DD3}	Operating Current (LIRC, $f_{SYS}=f_L=f_{LIRC}$, $f_S=f_{SUB}=f_{LIRC}$) (BS83B08A-3/BS83B12A-3/ BS83B16A-3/BS83B08A-4/ BS83B12A-4/BS83B16A-4)	3V	No load, WDT enable, LVR enable	—	50	100	μA
		5V		—	70	150	μA
	Operating Current (LIRC, $f_{SYS}=f_L=f_{LIRC}$, $f_S=f_{SUB}=f_{LIRC}$) (BS83B04A-4)	3V	No load, WDT enable, LVR enable	—	10	20	μA
		5V		—	30	50	μA
I_{STB1}	IDLE Mode Standby Current (HIRC, $f_{SYS}=f_H$, $f_S=f_{SUB}=f_{LIRC}$)	3V	No load, system HALT, WDT enable, f_{SYS}=12MHz	—	0.9	1.4	mA
		5V		—	1.4	2.1	mA
I_{STB2}	IDLE Mode Standby Current (HIRC, f_{SYS}=off, $f_S=f_{SUB}=f_{LIRC}$)	3V	No load, system HALT, WDT enable, f_{SYS}=12MHz, LVR enable	—	40	80	μA
		5V		—	50	100	μA
I_{STB3}	IDLE Mode Standby Current (HIRC, $f_{SYS}=f_L$, $f_S=f_{SUB}=f_{LIRC}$)	3V	No load, system HALT, WDT enable, f_{SYS}=12MHz/64	—	0.7	1.1	mA
		5V		—	1.4	2.1	mA
I_{STB4}	IDLE Mode Standby Current (HIRC, f_{SYS}=off, $f_S=f_{SUB}=f_{LIRC}$)	3V	No load, system HALT, WDT enable, f_{SYS}=12MHz/64, LVR enable	—	40	80	μA
		5V		—	50	100	μA
I_{STB5}	IDLE Mode Standby Current (LIRC, $f_{SYS}=f_L=f_{LIRC}$, $f_S=f_{SUB}=f_{LIRC}$)	3V	No load, system HALT, WDT enable, f_{SYS}=32kHz	—	1.9	4.0	μA
		5V		—	3.3	7.0	μA
I_{STB6}	IDLE Mode Standby Current (LIRC, f_{SYS}=off, $f_S=f_{SUB}=f_{LIRC}$)	3V	No load, system HALT, WDT enable, f_{SYS}=32kHz, LVR enable	—	40	80	μA
		5V		—	50	100	μA
I_{STB7}	SLEEP Mode Standby Current (LIRC, f_{SYS}=off, $f_S=f_{SUB}=f_{LIRC}$)	3V	No load, system HALT, WDT enable, f_{SYS}=32kHz	—	1.3	3.0	μA
		5V		—	2.4	5.0	μA
I_{STB8}	SLEEP Mode Standby Current (BS83B04A-4 only)	3V	No load, WDT enable	—	1.5	3.0	μA
		5V		—	3.0	5.0	μA
I_{STB9}	IDLE0 Mode Standby Current (BS83B04A-4 only)	3V	No load, f_{SUB} on	—	3.0	5.0	μA
		5V		—	5.0	10.0	μA
I_{STB10}	IDLE1 Mode Standby Current (BS83B04A-4 only)	3V	No load, f_{SUB} on, $f_{SYS}=f_{HIRC}$=8MHz	—	360	500	μA
		5V		—	600	800	μA
V_{IL}	Input Low Voltage for I/O Ports or Input Pins	5V	—	0	—	1.5	V
		—		0	—	$0.2V_{DD}$	V
V_{IH}	Input High Voltage for I/O Ports or Input Pins	5V	—	3.5	—	5.0	V
		—		$0.8V_{DD}$	—	V_{DD}	V
V_{LVR}	Low Voltage Reset Voltage (BS83B08A-3/BS83B12A-3/ BS83B16A-3)	—	LVR enable, 2.55V	-5%	2.55	+5%	V
	Low Voltage Reset Voltage (BS83B04A-4/BS83B08A-4/ BS83B12A-4/BS83B16A-4)	—	LVR enable, 2.10V	-5%	2.10	+5%	V

Symbol	Parameter	Test Conditions		Min.	Typ.	Max.	Unit
		V_{DD}	Conditions				
I_{LVR}	Low Voltage Reset Current	—	LVR enable	—	62	90	μA
I_{OL}	Sink Current for I/O Port (BS83B08A-3/BS83B08A-4)	3V	V_{OL}=0.1V_{DD}	4	8	—	mA
		5V		10	20	—	mA
	Sink Current for I/O Port (BS83B04A-4/BS83B12A-3/ BS83B12A-4/BS83B16A-3/ BS83B16A-4)	3V	V_{OL}=0.1V_{DD}	8	16	—	mA
		5V		16	32	—	mA
I_{OH}	Source Current for I/O Port (BS83B08A-3/BS83B08A-4)	3V	V_{OH}=0.9V_{DD}	-2	-4	—	mA
		5V		-5	-10	—	mA
	Source Current for I/O Port (BS83B12A-3/BS83B12A-4/ BS83B16A-3/BS83B16A-4)	3V	V_{OH}=0.9V_{DD}	-3.75	-7.5	—	mA
		5V		-7.5	-15	—	mA
R_{PH}	Pull-high Resistance for I/O Ports	3V	—	20	60	100	kΩ
		5V	—	10	30	50	kΩ

A.C. Characteristics

Ta=25°C

Symbol	Parameter	Test Conditions		Min.	Typ.	Max.	Unit
		V_{DD}	Conditions				
f_{SYS}	System Clock (HIRC)	3V/5V	Ta=25°C	-2%	8	+2%	MHz
				-2%	12	+2%	MHz
		5V	Ta=25°C	-2%	16	+2%	MHz
f_{TIMER}	Timer Input Pin Frequency	2.7V~5.5V	—	—	—	8	MHz
		2.7V~5.5V		—	—	12	MHz
		4.5V~5.5V		—	—	16	MHz
f_{LIRC}	System Clock (32kHz)	5V	Ta=25°C	-10%	32	+10%	kHz
t_{INT}	Interrupt Pulse Width	—	—	1	—	—	μs
t_{LVR}	Low Voltage Width to Reset	—	—	60	120	240	μs
t_{EERD}	EEPROM Read Time	—	—	1	2	4	t_{SYS}
t_{EEWR}	EEPROM Write Time	—	—	1	2	4	ms
t_{RSTD}	System reset delay time (POR reset, LVR hardware reset, LVR software reset, WDT software reset, reset control register software reset)	—	—	25	50	100	ms
	System reset delay time (WDT time-out hardware cold reset)	—	—	8.3	16.7	33.3	ms

Symbol	Parameter	Test Conditions		Min.	Typ.	Max.	Unit
		V_{DD}	Conditions				
t_{SST}	System start-up timer period (wake-up from halt, f_{SYS} off at halt)	—	$f_{SYS}=f_{HIRC}$~$f_{HIRC}/64$	16	—	—	t_{HIRC}
		—	$f_{SYS}=f_{LIRC}$	2	—	—	t_{LIRC}
	System start-up timer period (slow mode ↔ normal mode)	—	f_{HIRC} off→on (HTO=1)	16	—	—	t_{HIRC}
	System start-up timer period (wake-up from halt, f_{SYS} on at halt state)	—	$f_{SYS}=f_{HIRC}$~$f_{HIRC}/64$	2	—	—	t_{HIRC}
		—	$f_{SYS}=f_{LIRC}$	2	—	—	t_{LIRC}
	System start-up timer period (WDT time-out hardware cold reset)	—	—	0	—	—	t_H
f_{I2C}	I^2C standard mode (100kHz) f_{SYS} frequency	—	No clock debounce	2	—	—	MHz
		—	2 system clock debounce	4	—	—	MHz
		—	4 system clock debounce	8	—	—	MHz
	I^2C fast mode (400kHz) f_{SYS} frequency	—	No clock debounce	5	—	—	MHz
		—	2 system clock debounce	10	—	—	MHz
		—	4 system clock debounce	20	—	—	MHz

Note: 1. $t_{SYS}=1/f_{SYS}$
2. To maintain the accuracy of the internal HIRC oscillator frequency, a 0.1μF decoupling capacitor should be connected between VDD and VSS and located as close to the device as possible.
3. 16MHz can not be used when the supply voltage is below 3.3V.

Power-on Reset Characteristics

Symbol	Parameter	Test Conditions		Min.	Typ.	Max.	Unit
		V_{DD}	Conditions				
V_{POR}	V_{DD} Start Voltage to Ensure Power-on Reset	—	—	—	—	100	mV
RR_{POR}	V_{DD} Raising Rate to Ensure Power-on Reset	—	—	0.035	—	—	V/ms
t_{POR}	Minimum Time for V_{DD} Stays at V_{POR} to Ensure Power-on Reset	—	—	1	—	—	ms

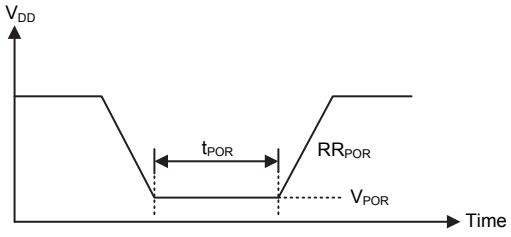

System Architecture

A key factor in the high-performance features of the Holtek range of microcontrollers is attributed to their internal system architecture. The range of devices take advantage of the usual features found within RISC microcontrollers providing increased speed of operation and Periodic performance. The pipelining scheme is implemented in such a way that instruction fetching and instruction execution are overlapped, hence instructions are effectively executed in one cycle, with the exception of branch or call instructions. An 8-bit wide ALU is used in practically all instruction set operations, which carries out arithmetic operations, logic operations, rotation, increment, decrement, branch decisions, etc. The internal data path is simplified by moving data through the Accumulator and the ALU. Certain internal registers are implemented in the Data Memory and can be directly or indirectly addressed. The simple addressing methods of these registers along with additional architectural features ensure that a minimum of external components is required to provide a functional I/O control system with maximum reliability and flexibility. This makes these devices suitable for affordable, high-volume production for controller applications.

Clocking and Pipelining

The main system clock, derived from either a high or low speed oscillator is subdivided into four internally generated non-overlapping clocks, T1~T4. The Program Counter is incremented at the beginning of the T1 clock during which time a new instruction is fetched. The remaining T2~T4 clocks carry out the decoding and execution functions. In this way, one T1~T4 clock cycle forms one instruction cycle. Although the fetching and execution of instructions takes place in consecutive instruction cycles, the pipelining structure of the microcontroller ensures that instructions are effectively executed in one instruction cycle. The exception to this are instructions where the contents of the Program Counter are changed, such as subroutine calls or jumps, in which case the instruction will take one more instruction cycle to execute.

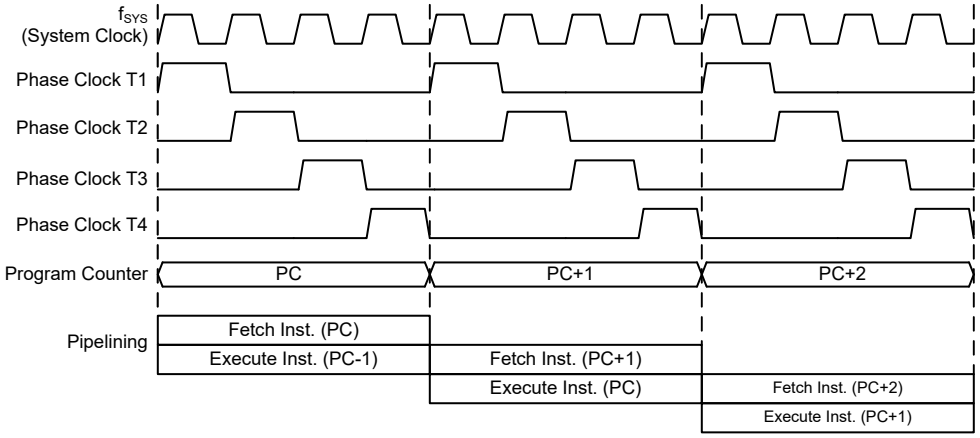

System Clock and Pipelining

For instructions involving branches, such as jump or call instructions, two machine cycles are required to complete instruction execution. An extra cycle is required as the program takes one cycle to first obtain the actual jump or call address and then another cycle to actually execute the branch. The requirement for this extra cycle should be taken into account by programmers in timing sensitive applications.

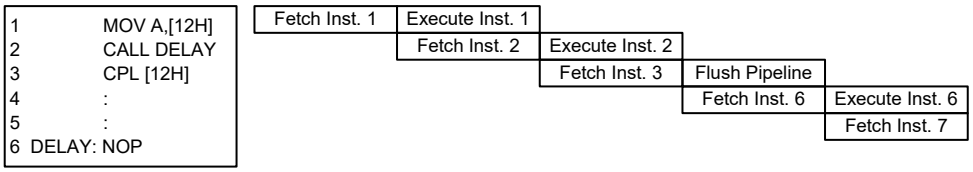

Instruction Fetching

Program Counter

During program execution, the Program Counter is used to keep track of the address of the next instruction to be executed. It is automatically incremented by one each time an instruction is executed except for instructions, such as "JMP" or "CALL" that demand a jump to a non-consecutive Program Memory address. Only the lower 8 bits, known as the Program Counter Low Register, are directly addressable by the application program.

When executing instructions requiring jumps to non-consecutive addresses such as a jump instruction, a subroutine call, interrupt or reset, etc., the microcontroller manages program control by loading the required address into the Program Counter. For conditional skip instructions, once the condition has been met, the next instruction, which has already been fetched during the present instruction execution, is discarded and a dummy cycle takes its place while the correct instruction is obtained.

Device	Program Counter	
	Program CounterHigh Byte	PCL Register
BS83B04A-4	PC10~PC8	PCL7~PCL0
BS83B08A-3/BS83B08A-4	PC10~PC8	
BS83B12A-3/BS83B12A-4	PC10~PC8	
BS83B16A-3/BS83B16A-4	PC10~PC8	

The lower byte of the Program Counter, known as the Program Counter Low register or PCL, is available for program control and is a readable and writeable register. By transferring data directly into this register, a short program jump can be executed directly, however, as only this low byte is available for manipulation, the jumps are limited to the present page of memory, that is 256 locations. When such program jumps are executed it should also be noted that a dummy cycle will be inserted. Manipulating the PCL register may cause program branching, so an extra cycle is needed to pre-fetch.

Stack

This is a special part of the memory which is used to save the contents of the Program Counter only. The stack is neither part of the data nor part of the program space, and is neither readable nor writeable. The activated level is indexed by the Stack Pointer, and is neither readable nor writeable. At a subroutine call or interrupt acknowledge signal, the contents of the Program Counter are pushed onto the stack. At the end of a subroutine or an interrupt routine, signaled by a return instruction, RET or RETI, the Program Counter is restored to its previous value from the stack. After a device reset, the Stack Pointer will point to the top of the stack.

If the stack is full and an enabled interrupt takes place, the interrupt request flag will be recorded but the acknowledge signal will be inhibited. When the Stack Pointer is decremented, by RET or RETI, the interrupt will be serviced. This feature prevents stack overflow allowing the programmer to use the structure more easily. However, when the stack is full, a CALL subroutine instruction can still be executed which will result in a stack overflow. Precautions should be taken to avoid such cases which might cause unpredictable program branching. If the stack is overflow, the first Program Counter save in the stack will be lost.

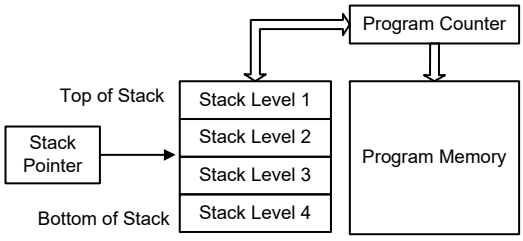

Arithmetic and Logic Unit – ALU

The arithmetic-logic unit or ALU is a critical area of the microcontroller that carries out arithmetic and logic operations of the instruction set. Connected to the main microcontroller data bus, the ALU receives related instruction codes and performs the required arithmetic or logical operations after which the result will be placed in the specified register. As these ALU calculation or operations may result in carry, borrow or other status changes, the status register will be correspondingly updated to reflect these changes. The ALU supports the following functions:

- Arithmetic operations: ADD, ADDM, ADC, ADCM, SUB, SUBM, SBC, SBCM, DAA
- Logic operations: AND, OR, XOR, ANDM, ORM, XORM, CPL, CPLA
- Rotation RRA, RR, RRCA, RRC, RLA, RL, RLCA, RLC
- Increment and Decrement INCA, INC, DECA, DEC
- Branch decision, JMP, SZ, SZA, SNZ, SIZ, SDZ, SIZA, SDZA, CALL, RET, RETI

Flash Program Memory

The Program Memory is the location where the user code or program is stored. For this device series the Program Memory is Flash type, which means it can be programmed and re-programmed a large number of times, allowing the user the convenience of code modification on the same device. By using the appropriate programming tools, these Flash devices offer users the flexibility to conveniently debug and develop their applications while also offering a means of field programming and updating.

Structure

The Program Memory has a capacity of 2K×16 bits. The Program Memory is addressed by the Program Counter and also contains data, table information and interrupt entries. Table data, which can be setup in any location within the Program Memory, is addressed by a separate table pointer register.

Special Vectors

Within the Program Memory, certain locations are reserved for the reset and interrupts. The location 000H is reserved for use by the device reset for program initialisation. After a device reset is initiated, the program will jump to this location and begin execution.

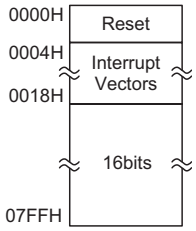

Program Memory Structure

Look-up Table

Any location within the Program Memory can be defined as a look-up table where programmers can store fixed data. To use the look-up table, the table pointer must first be setup by placing the address of the look up data to be retrieved in the table pointer register, TBLP and TBHP. These registers define the total address of the look-up table.

After setting up the table pointer, the table data can be retrieved from the Program Memory using the “TABRDC [m]” or “TABRDL [m]” instructions, respectively. When the instruction is executed, the lower order table byte from the Program Memory will be transferred to the user defined Data Memory register [m] as specified in the instruction. The higher order table data byte from the Program Memory will be transferred to the TBLH special register. Any unused bits in this transferred higher order byte will be read as “0”.

The accompanying diagram illustrates the addressing data flow of the look-up table.

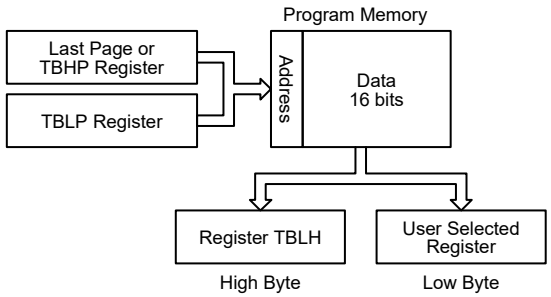

Instruction	Table Location Bits										
	b10	b9	b8	b7	b6	b5	b4	b3	b2	b1	b0
TABRDC [m]	@10	@9	@8	@7	@6	@5	@4	@3	@2	@1	@0
TABRDL [m]	1	1	1	@7	@6	@5	@4	@3	@2	@1	@0

Table Location

Note: b10~b0: Table location bits

@7~@0: Table pointer (TBLP) bits

@10~@8: Table pointer (TBHP) bits

Table Program Example

The following example shows how the table pointer and table data is defined and retrieved from the microcontroller. This example uses raw table data located in the Program Memory which is stored there using the ORG statement. The value at this ORG statement is “700H” which refers to the start address of the last page within the 2K words Program Memory of the device. The table pointer is setup here to have an initial value of “06H”. This will ensure that the first data read from the data table will be at the Program Memory address “706H” or 6 locations after the start of the last page. Note that the value for the table pointer is referenced to the first address of the present page if the “TABRDC [m]” instruction is being used. The high byte of the table data which in this case is equal to zero will be transferred to the TBLH register automatically when the “TABRDC [m]” instruction is executed.

Because the TBLH register is a read-only register and cannot be restored, care should be taken to ensure its protection if both the main routine and Interrupt Service Routine use table read instructions. If using the table read instructions, the Interrupt Service Routines may change the value of the TBLH and subsequently cause errors if used again by the main routine. As a rule it is recommended that simultaneous use of the table read instructions should be avoided. However, in situations where simultaneous use cannot be avoided, the interrupts should be disabled prior to the execution of any main routine table-read instructions. Note that all table related instructions require two instruction cycles to complete their operation.

Table Read Program Example

```
tempreg1 db ?      ; temporary register #1
tempreg2 db ?      ; temporary register #2
:
:
mov a,06h          ; initialise low table pointer - note that this address is referenced
mov tblp,a
mov a,07h          ; initialise high table pointer
mov tbhp,a
:
:
tabrdc tempreg1    ; transfers value in table referenced by table pointer data at program
                   ; memory address "706H" transferred to tempreg1 and TBLH
dec tblp           ; reduce value of table pointer by one
tabrdc tempreg2    ; transfers value in table referenced by table pointer data at program
                   ; memory address "705H" transferred to tempreg2 and TBLH in this
                   ; example the data "1AH" is transferred to tempreg1 and data "0FH" to
                   ; register tempreg2
:
:
org 700h           ; sets initial address of program memory
dc 00Ah, 00Bh, 00Ch, 00Dh, 00Eh, 00Fh, 01Ah, 01Bh
:
:
```

In Circuit Programming

The provision of Flash type Program Memory provides the user with a means of convenient and easy upgrades and modifications to their programs on the same device. As an additional convenience, Holtek has provided a means of programming the microcontroller in-circuit using a 4-pin interface. This provides manufacturers with the possibility of manufacturing their circuit boards complete with a programmed or un-programmed microcontroller, and then programming or upgrading the program at a later stage. This enables product manufacturers to easily keep their manufactured products supplied with the latest program releases without removal and re-insertion of the device.

The Holtek Flash MCU to Writer Programming Pin correspondence table is as follows:

Holtek Write Pins	MCU Programming Pins	Function
ICPDA	PA0	Serial Address and data -- read/write
ICPCK	PA2	Programming Serial Clock
VDD	VDD	Power Supply (5.0V)
VSS	VSS	Ground

During the programming process, the user must there take care to ensure that no other outputs are connected to these two pins.

The Program Memory and EEPROM data memory can both be programmed serially in-circuit using this 4-wire interface. Data is downloaded and uploaded serially on a single pin with an additional line for the clock. Two additional lines are required for the power supply. The technical details regarding the in-circuit programming of the device are beyond the scope of this document and will be supplied in supplementary literature.

During the programming process the PA0 and PA2 I/O pins for data and clock programming purposes. The user must there take care to ensure that no other outputs are connected to these two pins.

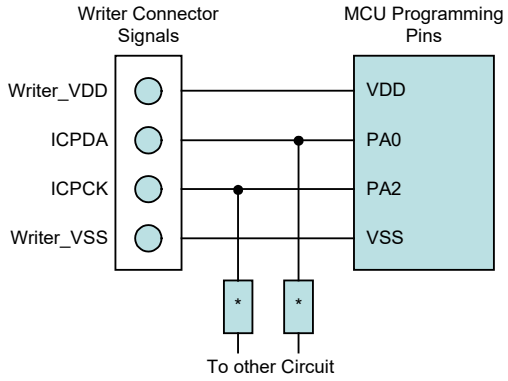

Note: * may be resistor or capacitor. The resistance of * must be greater than 1k or the capacitance of * must be less than 1nF.

On-Chip Debug Support – OCDS

There is an EV chip which is used to emulate the device. Each EV chip device also provides an "On-Chip Debug" function to debug the corresponding MCU device during the development process. The EV chip and the actual MCU device are almost functionally compatible except for the "On-Chip Debug" function. Users can use the EV chip device to emulate the real chip device behavior by connecting the OCDSDA and OCDSCK pins to the Holtek HT-IDE development tools. The OCDSDA pin is the OCDS Data/Address input/output pin while the OCDSCK pin is the OCDS clock input pin. When users use the EV chip for debugging, other functions which are shared with the OCDSDA and OCDSCK pins in the actual MCU device will have no effect in the EV chip. However, the two OCDS pins which are pin-shared with the ICP programming pins are still used as the Flash Memory programming pins for ICP. For a more detailed OCDS description, refer to the corresponding document named "Holtek e-Link for 8-bit MCU OCDS User's Guide".

Holtek e-Link Pins	EV Chip Pins	Pin Description
OCDSDA	OCDSDA	On-chip Debug Support Data/Address input/output
OCDSCK	OCDSCK	On-chip Debug Support Clock input
VDD	VDD	Power Supply
GND	VSS	Ground

RAM Data Memory

The Data Memory is a volatile area of 8-bit wide RAM internal memory and is the location where temporary information is stored.

Structure

Divided into two sections, the first of these is an area of RAM, known as the Special Function Data Memory. Here are located registers which are necessary for correct operation of the device. Many of these registers can be read from and written to directly under program control, however, some remain protected from user manipulation.

The second area of Data Memory is known as the General Purpose Data Memory, which is reserved for general purpose use. All locations within this area are read and write accessible under program control.

The overall Data Memory is subdivided into two banks for the devices. The Special Purpose Data Memory registers are accessible in all banks, with the exception of the EEC register at address 40H, which is only accessible in Bank 1. Switching between the different Data Memory banks is achieved by setting the Bank Pointer to the correct value. The start address of the Data Memory for all devices is the address 00H.

Device	Capacity	Bank 0	Bank 1
BS83B04A-4	128×8	60H~FFH	E0H~FFH
BS83B08A-3/BS83B08A-4	160×8	60H~FFH	—
BS83B12A-3/BS83B12A-4	288×8	60H~FFH	80H~FFH
BS83B16A-3/BS83B16A-4	288×8	60H~FFH	80H~FFH

General Purpose Data Memory

Special Function Register Description

Most of the Special Function Register details will be described in the relevant functional section, however several registers require a separate description in this section.

Indirect Addressing Registers – IAR0, IAR1

The Indirect Addressing Registers, IAR0 and IAR1, although having their locations in normal RAM register space, do not actually physically exist as normal registers. The method of indirect addressing for RAM data manipulation uses these Indirect Addressing Registers and Memory Pointers, in contrast to direct memory addressing, where the actual memory address is specified. Actions on the IAR0 and IAR1 registers will result in no actual read or write operation to these registers but rather to the memory location specified by their corresponding Memory Pointers, MP0 or MP1. Acting as a pair, IAR0 and MP0 can together access data from Bank 0 while the IAR1 and MP1 register pair can access data from any bank. As the Indirect Addressing Registers are not physically implemented, reading the Indirect Addressing Registers indirectly will return a result of “00H” and writing to the registers indirectly will result in no operation.

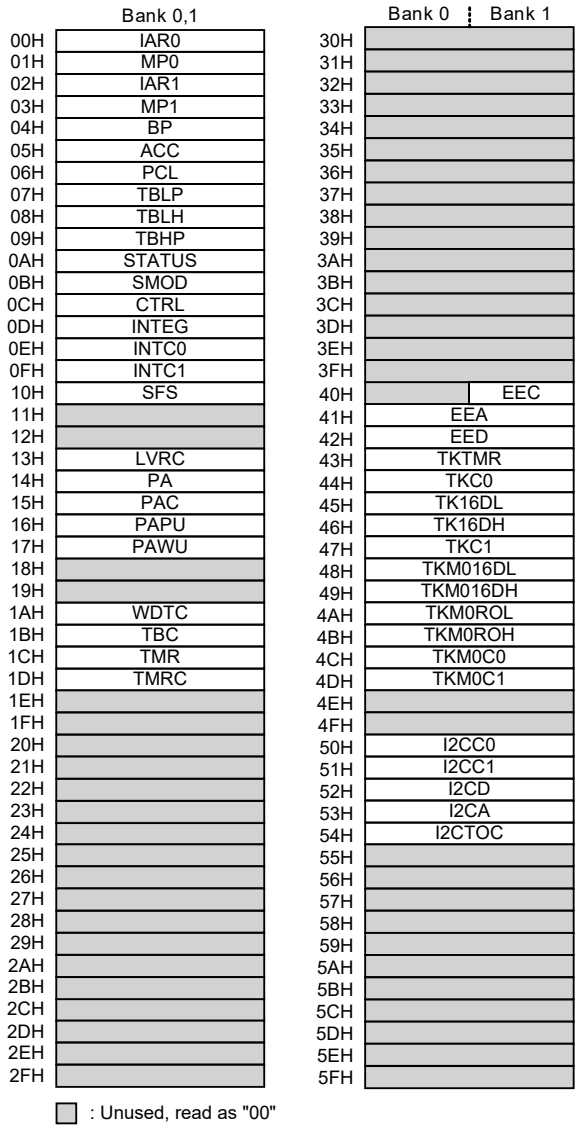

Special Purpose Data Memory – BS83B04A-4

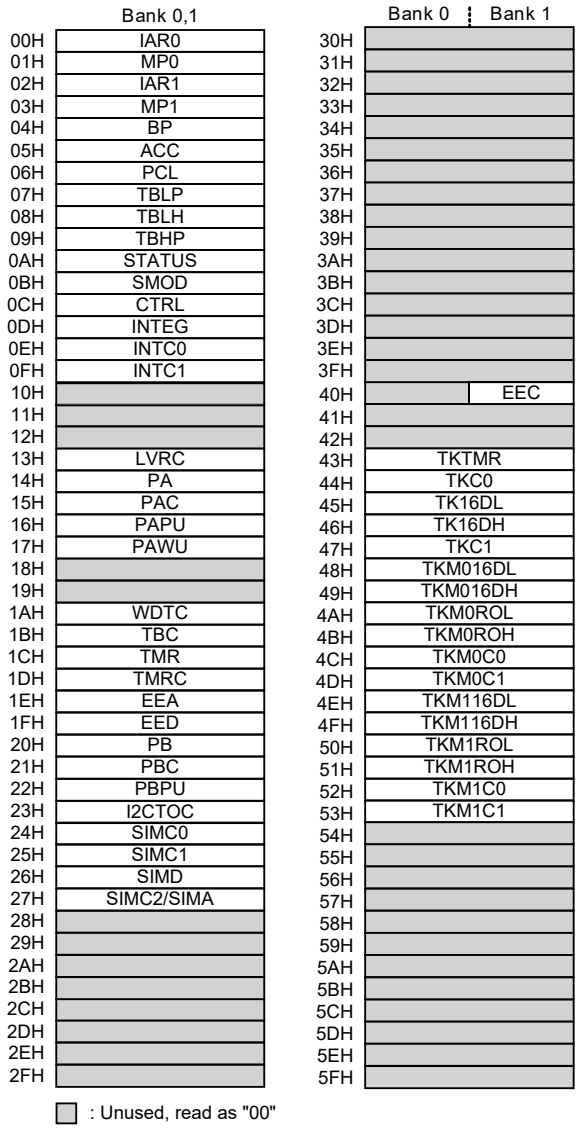

Special Purpose Data Memory – BS83B08A-3/BS83B08A-4

	Bank 0,1
00H	IAR0
01H	MP0
02H	IAR1
03H	MP1
04H	BP
05H	ACC
06H	PCL
07H	TBLP
08H	TBLH
09H	TBHP
0AH	STATUS
0BH	SMOD
0CH	CTRL
0DH	INTEG
0EH	INTC0
0FH	INTC1
10H	
11H	
12H	
13H	LVRC
14H	PA
15H	PAC
16H	PAPU
17H	PAWU
18H	
19H	
1AH	WDTC
1BH	TBC
1CH	TMR
1DH	TMRC
1EH	EEA
1FH	EED
20H	PB
21H	PBC
22H	PBPU
23H	I2CTOC
24H	SIMC0
25H	SIMC1
26H	SIMD
27H	SIMC2/SIMA
28H	
29H	
2AH	
2BH	
2CH	
2DH	
2EH	
2FH	

	Bank 0 ⋮ Bank 1
30H	
31H	
32H	
33H	
34H	
35H	
36H	
37H	
38H	PC
39H	PCC
3AH	PCPU
3BH	
3CH	
3DH	
3EH	
3FH	
40H	EEC
41H	
42H	
43H	TKTMR
44H	TKC0
45H	TK16DL
46H	TK16DH
47H	TKC1
48H	TKM016DL
49H	TKM016DH
4AH	TKM0ROL
4BH	TKM0ROH
4CH	TKM0C0
4DH	TKM0C1
4EH	TKM116DL
4FH	TKM116DH
50H	TKM1ROL
51H	TKM1ROH
52H	TKM1C0
53H	TKM1C1
54H	TKM216DL
55H	TKM216DH
56H	TKM2ROL
57H	TKM2ROH
58H	TKM2C0
59H	TKM2C1
5AH	
5BH	
5CH	
5DH	
5EH	
5FH	

: Unused, read as "00"

Special Purpose Data Memory – BS83B12A-3/BS83B12A-4

	Bank 0,1		Bank 0	Bank 1
00H	IAR0	30H		
01H	MP0	31H		
02H	IAR1	32H		
03H	MP1	33H		
04H	BP	34H		
05H	ACC	35H		
06H	PCL	36H		
07H	TBLP	37H		
08H	TBLH	38H	PC	
09H	TBHP	39H	PCC	
0AH	STATUS	3AH	PCPU	
0BH	SMOD	3BH		
0CH	CTRL	3CH		
0DH	INTEG	3DH		
0EH	INTC0	3EH		
0FH	INTC1	3FH		
10H		40H		EEC
11H		41H		
12H		42H		
13H	LVRC	43H	TKTMR	
14H	PA	44H	TKC0	
15H	PAC	45H	TK16DL	
16H	PAPU	46H	TK16DH	
17H	PAWU	47H	TKC1	
18H		48H	TKM016DL	
19H		49H	TKM016DH	
1AH	WDTC	4AH	TKM0ROL	
1BH	TBC	4BH	TKM0ROH	
1CH	TMR	4CH	TKM0C0	
1DH	TMRC	4DH	TKM0C1	
1EH	EEA	4EH	TKM116DL	
1FH	EED	4FH	TKM116DH	
20H	PB	50H	TKM1ROL	
21H	PBC	51H	TKM1ROH	
22H	PBPU	52H	TKM1C0	
23H	I2CTOC	53H	TKM1C1	
24H	SIMC0	54H	TKM216DL	
25H	SIMC1	55H	TKM216DH	
26H	SIMD	56H	TKM2ROL	
27H	SIMC2/SIMA	57H	TKM2ROH	
28H		58H	TKM2C0	
29H		59H	TKM2C1	
2AH		5AH	TKM316DL	
2BH		5BH	TKM316DH	
2CH		5CH	TKM3ROL	
2DH		5DH	TKM3ROH	
2EH		5EH	TKM3C0	
2FH		5FH	TKM3C1	

: Unused, read as "00"

Special Purpose Data Memory – BS83B16A-3/BS83B16A-4

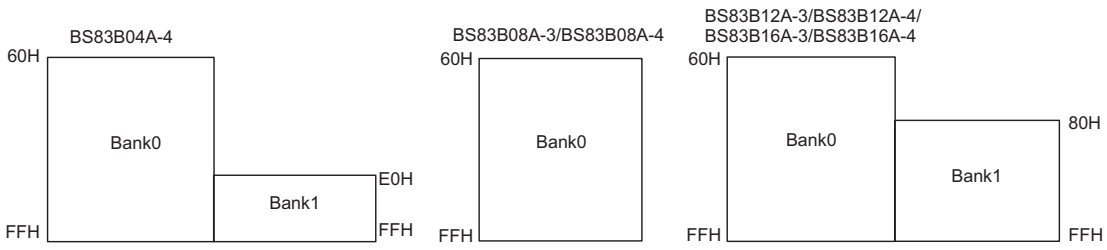

General Purpose Data Memory

Memory Pointers – MP0, MP1

Two Memory Pointers, known as MP0 and MP1 are provided. These Memory Pointers are physically implemented in the Data Memory and can be manipulated in the same way as normal registers providing a convenient way with which to address and track data. When any operation to the relevant Indirect Addressing Registers is carried out, the actual address that the microcontroller is directed to is the address specified by the related Memory Pointer. MP0, together with Indirect Addressing Register, IAR0, are used to access data from Bank 0, while MP1 and IAR1 are used to access data from all banks according to BP register. Direct Addressing can only be used with Bank 0, all other Banks must be addressed indirectly using MP1 and IAR1.

The following example shows how to clear a section of four Data Memory locations already defined as locations adres1 to adres4.

Indirect Addressing Program Example

```
data .section ´data´
adres1   db ?
adres2   db ?
adres3   db ?
adres4   db ?
block    db ?
code .section at 0 ´code´
org00h
start:
     mov a,04h              ; setup size of block
     mov block,a
     mov a,offset adres1    ; Accumulator loaded with first RAM address
     mov mp0,a              ; setup memory pointer with first RAM address
loop:
     clr IAR0               ; clear the data at address defined by mp0
     inc mp0                ; increment memory pointer
     sdz block              ; check if last memory location has been cleared
     jmp loop
continue:
```

The important point to note here is that in the example shown above, no reference is made to specific Data Memory addresses.

Bank Pointer – BP

For this device, the Data Memory is divided into two banks, Bank0 and Bank1. Selecting the required Data Memory area is achieved using the Bank Pointer. Bit 0 of the Bank Pointer is used to select Data Memory Banks 0~1.

The Data Memory is initialised to Bank 0 after a reset, except for a WDT time-out reset in the Power Down Mode, in which case, the Data Memory bank remains unaffected. It should be noted that the Special Function Data Memory is not affected by the bank selection, which means that the Special Function Registers can be accessed from within any bank. Directly addressing the Data Memory will always result in Bank 0 being accessed irrespective of the value of the Bank Pointer. Accessing data from Bank1 must be implemented using Indirect Addressing.

BP Register

Bit	7	6	5	4	3	2	1	0
Name	—	—	—	—	—	—	—	DMBP0
R/W	—	—	—	—	—	—	—	R/W
POR	—	—	—	—	—	—	—	0

Bit 7~1 Unimplemented, read as "0"

Bit 0 **DMBP0:** Select Data Memory Banks
0: Bank 0
1: Bank 1

Accumulator – ACC

The Accumulator is central to the operation of any microcontroller and is closely related with operations carried out by the ALU. The Accumulator is the place where all intermediate results from the ALU are stored. Without the Accumulator it would be necessary to write the result of each calculation or logical operation such as addition, subtraction, shift, etc., to the Data Memory resulting in higher programming and timing overheads. Data transfer operations usually involve the temporary storage function of the Accumulator; for example, when transferring data between one user-defined register and another, it is necessary to do this by passing the data through the Accumulator as no direct transfer between two registers is permitted.

Program Counter Low Register – PCL

To provide additional program control functions, the low byte of the Program Counter is made accessible to programmers by locating it within the Special Purpose area of the Data Memory. By manipulating this register, direct jumps to other program locations are easily implemented. Loading a value directly into this PCL register will cause a jump to the specified Program Memory location, however, as the register is only 8-bit wide, only jumps within the current Program Memory page are permitted. When such operations are used, note that a dummy cycle will be inserted.

Look-up Table Registers – TBLP, TBHP, TBLH

These three special function registers are used to control operation of the look-up table which is stored in the Program Memory. TBLP and TBHP are the table pointers and indicate the location where the table data is located. Their value must be setup before any table read commands are executed. Their value can be changed, for example using the “INC” or “DEC” instructions, allowing for easy table data pointing and reading. TBLH is the location where the high order byte of the table data is stored after a table read data instruction has been executed. Note that the lower order table data byte is transferred to a user defined location.

Status Register – STATUS

This 8-bit register contains the zero flag (Z), carry flag (C), auxiliary carry flag (AC), overflow flag (OV), power down flag (PDF), and watchdog time-out flag (TO). These arithmetic/logical operation and system management flags are used to record the status and operation of the microcontroller.

With the exception of the TO and PDF flags, bits in the status register can be altered by instructions like most other registers. Any data written into the status register will not change the TO or PDF flag. In addition, operations related to the status register may give different results due to the different instruction operations. The TO flag can be affected only by a system power-up, a WDT time-out or by executing the "CLR WDT" or "HALT" instruction. The PDF flag is affected only by executing the "HALT" or "CLR WDT" instruction or during a system power-up.

The Z, OV, AC and C flags generally reflect the status of the latest operations.

- C is set if an operation results in a carry during an addition operation or if a borrow does not take place during a subtraction operation; otherwise C is cleared. C is also affected by a rotate through carry instruction.
- AC is set if an operation results in a carry out of the low nibbles in addition, or no borrow from the high nibble into the low nibble in subtraction; otherwise AC is cleared.
- Z is set if the result of an arithmetic or logical operation is zero; otherwise Z is cleared.
- OV is set if an operation results in a carry into the highest-order bit but not a carry out of the highest-order bit, or vice versa; otherwise OV is cleared.
- PDF is cleared by a system power-up or executing the "CLR WDT" instruction. PDF is set by executing the "HALT" instruction.
- TO is cleared by a system power-up or executing the "CLR WDT" or "HALT" instruction. TO is set by a WDT time-out.

In addition, on entering an interrupt sequence or executing a subroutine call, the status register will not be pushed onto the stack automatically. If the contents of the status registers are important and if the subroutine can corrupt the status register, precautions must be taken to correctly save it.

STATUS Register

Bit	7	6	5	4	3	2	1	0
Name	—	—	TO	PDF	OV	Z	AC	C
R/W	—	—	R	R	R/W	R/W	R/W	R/W
POR	—	—	0	0	×	×	×	×

"x" unknown

Bit 7~6 Unimplemented, read as "0"

Bit 5 **TO:** Watchdog Time-Out flag
0: After power up or executing the "CLR WDT" or "HALT" instruction
1: A watchdog time-out occurred.

Bit 4 **PDF:** Power down flag
0: After power up or executing the "CLR WDT" instruction
1: By executing the "HALT" instruction

Bit 3 **OV:** Overflow flag
0: No overflow
1: An operation results in a carry into the highest-order bit but not a carry out of the highest-order bit or vice versa.

Bit 2 **Z:** Zero flag
0: The result of an arithmetic or logical operation is not zero
1: The result of an arithmetic or logical operation is zero

Bit 1 **AC:** Auxiliary flag
0: No auxiliary carry
1: An operation results in a carry out of the low nibbles in addition, or no borrow from the high nibble into the low nibble in subtraction

Bit 0 **C:** Carry flag
0: No carry-out
1: An operation results in a carry during an addition operation or if a borrow does not take place during a subtraction operation

C is also affected by a rotate through carry instruction.

EEPROM Data Memory

One of the special features in the device is its internal EEPROM Data Memory. EEPROM, which stands for Electrically Erasable Programmable Read Only Memory, is by its nature a non-volatile form of memory, with data retention even when its power supply is removed. By incorporating this kind of data memory, a whole new host of application possibilities are made available to the designer. The availability of EEPROM storage allows information such as product identification numbers, calibration values, specific user data, system setup data or other product information to be stored directly within the product microcontroller. The process of reading and writing data to the EEPROM memory has been reduced to a very trivial affair.

EEPROM Data Memory Structure

The EEPROM Data Memory capacity is up to 64×8 bits. Unlike the Program Memory and RAM Data Memory, the EEPROM Data Memory is not directly mapped and is therefore not directly accessible in the same way as the other types of memory. Read and Write operations to the EEPROM are carried out in single byte operations using an address and data register in Bank 0 and a single control register in Bank 1.

Device	Capacity	Address
BS83B04A-4	32×8	00H~1FH
BS83B08A-3/BS83B08A-4	64×8	00H~3FH
BS83B12A-3/BS83B12A-4	64×8	00H~3FH
BS83B16A-3/BS83B16A-4	64×8	00H~3FH

EEPROM Registers

Three registers control the overall operation of the internal EEPROM Data Memory. These are the address register, EEA, the data register, EED and a single control register, EEC. As both the EEA and EED registers are located in Bank 0, they can be directly accessed in the same way as any other Special Function Register. The EEC register however, being located in Bank1, cannot be directly addressed directly and can only be read from or written to indirectly using the MP1 Memory Pointer and Indirect Addressing Register, IAR1. Because the EEC control register is located at address 40H in Bank 1, the MP1 Memory Pointer must first be set to the value 40H and the Bank Pointer register, BP, set to the value, 01H, before any operations on the EEC register are executed.

Device	Register Name	Bit							
		7	6	5	4	3	2	1	0
BS83B04A-4	EEA	—	—	—	D4	D3	D2	D1	D0
Others	EEA	—	—	D5	D4	D3	D2	D1	D0
All devices	EED	D7	D6	D5	D4	D3	D2	D1	D0
	EEC	—	—	—	—	WREN	WR	RDEN	RD

EEPROM Control Registers List

EEA Register – BS83B04A-4

Bit	7	6	5	4	3	2	1	0
Name	—	—	—	D4	D3	D2	D1	D0
R/W	—	—	—	R/W	R/W	R/W	R/W	R/W
POR	—	—	—	0	0	0	0	0

Bit 7~5 Unimplemented, read as "0"

Bit 4~0 Data EEPROM address
Data EEPROM address bit 4~bit 0

EEA Register – except BS83B04A-4

Bit	7	6	5	4	3	2	1	0
Name	—	—	D5	D4	D3	D2	D1	D0
R/W	—	—	R/W	R/W	R/W	R/W	R/W	R/W
POR	—	—	×	×	×	×	×	×

"×" unknown

Bit 7~6 Unimplemented, read as "0"

Bit 5~0 Data EEPROM address
Data EEPROM address bit 5~bit 0

EED Register

Bit	7	6	5	4	3	2	1	0
Name	D7	D6	D5	D4	D3	D2	D1	D0
R/W	R/W	R/W	R/W	R/W	R/W	R/W	R/W	R/W
POR	0	0	0	0	0	0	0	0

Bit 7~0 Data EEPROM data
Data EEPROM data bit 7~bit 0

EEC Register

Bit	7	6	5	4	3	2	1	0
Name	—	—	—	—	WREN	WR	RDEN	RD
R/W	—	—	—	—	R/W	R/W	R/W	R/W
POR	—	—	—	—	0	0	0	0

Bit 7~4 Unimplemented, read as "0"

Bit 3 **WREN:** Data EEPROM Write Enable
0: Disable
1: Enable
This is the Data EEPROM Write Enable Bit which must be set high before Data EEPROM write operations are carried out. Clearing this bit to zero will inhibit Data EEPROM write operations.

Bit 2 **WR:** EEPROM Write Control
0: Write cycle has finished
1: Activate a write cycle
This is the Data EEPROM Write Control Bit and when set high by the application program will activate a write cycle. This bit will be automatically reset to zero by the hardware after the write cycle has finished. Setting this bit high will have no effect if the WREN has not first been set high.

Bit 1 **RDEN:** Data EEPROM Read Enable
0: Disable
1: Enable
This is the Data EEPROM Read Enable Bit which must be set high before Data EEPROM read operations are carried out. Clearing this bit to zero will inhibit Data EEPROM read operations.

Bit 0 **RD:** EEPROM Read Control
0: Read cycle has finished
1: Activate a read cycle
This is the Data EEPROM Read Control Bit and when set high by the application program will activate a read cycle. This bit will be automatically reset to zero by the hardware after the read cycle has finished. Setting this bit high will have no effect if the RDEN has not first been set high.

Note: The WREN, WR, RDEN and RD can not be set to "1" at the same time in one instruction. The WR and RD can not be set to "1" at the same time.

Reading Data from the EEPROM

To read data from the EEPROM, the read enable bit, RDEN, in the EEC register must first be set high to enable the read function. The EEPROM address of the data to be read must then be placed in the EEA register. If the RD bit in the EEC register is now set high, a read cycle will be initiated. Setting the RD bit high will not initiate a read operation if the RDEN bit has not been set. When the read cycle terminates, the RD bit will be automatically cleared to zero, after which the data can be read from the EED register. The data will remain in the EED register until another read or write operation is executed. The application program can poll the RD bit to determine when the data is valid for reading.

Writing Data to the EEPROM

To write data to the EEPROM, the write enable bit, WREN, in the EEC register must first be set high to enable the write function. The EEPROM address of the data to be written must then be placed in the EEA register and the data placed in the EED register. If the WR bit in the EEC register is now set high, an internal write cycle will then be initiated. Setting the WR bit high will not initiate a write cycle if the WREN bit has not been set. As the EEPROM write cycle is controlled using an internal timer whose operation is asynchronous to microcontroller system clock, a certain time will elapse before the data will have been written into the EEPROM. Detecting when the write cycle has finished can be implemented either by polling the WR bit in the EEC register or by using the EEPROM interrupt. When the write cycle terminates, the WR bit will be automatically cleared to zero by the microcontroller, informing the user that the data has been written to the EEPROM. The application program can therefore poll the WR bit to determine when the write cycle has ended.

Write Protection

Protection against inadvertent write operation is provided in several ways. After the device is powered-on the Write Enable bit in the control register will be cleared preventing any write operations. Also at power-on the Bank Pointer, BP, will be reset to zero, which means that Data Memory Bank 0 will be selected. As the EEPROM control register is located in Bank 1, this adds a further measure of protection against spurious write operations. During normal program operation, ensuring that the Write Enable bit in the control register is cleared will safeguard against incorrect write operations.

EEPROM Interrupt

The EEPROM write interrupt is generated when an EEPROM write cycle has ended. The EEPROM interrupt must first be enabled by setting the DEE bit in the relevant interrupt register. When an EEPROM write cycle ends, the DEF request flag will be set. If the global, EEPROM is enabled and the stack is not full, a jump to the associated Interrupt vector will take place. When the interrupt is serviced, the EEPROM interrupt flag will automatically reset. More details can be obtained in the Interrupt section.

Programming Considerations

Care must be taken that data is not inadvertently written to the EEPROM. Protection can be Periodic by ensuring that the Write Enable bit is normally cleared to zero when not writing. Also the Bank Pointer could be normally cleared to zero as this would inhibit access to Bank 1 where the EEPROM control register exist. Although certainly not necessary, consideration might be given in the application program to the checking of the validity of new write data by a simple read back process. When writing data the WR bit must be set high immediately after the WREN bit has been set high, to ensure the write cycle executes correctly. The global interrupt bit EMI should also be cleared before a write cycle is executed and then re-enabled after the write cycle starts.

Programming Examples

Reading Data from the EEPROM – Polling Method

```
MOV A, EEPROM_ADRES          ; user defined address
MOV EEA, A
MOV A, 040H                  ; setup memory pointer MP1
MOV MP1, A                   ; MP1 points to EEC register
MOV A, 01H                   ; setup Bank Pointer
MOV BP, A
SET IAR1.1                   ; set RDEN bit, enable read operations
SET IAR1.0                   ; start Read Cycle - set RD bit
BACK:
SZ IAR1.0                    ; check for read cycle end
JMP BACK
CLR IAR1                     ; disable EEPROM write
CLR BP
MOV A, EED                   ; move read data to register
MOV READ_DATA, A
```

Writing Data to the EEPROM – Polling Method

```
CLR EMI
MOV A, EEPROM_ADRES          ; user defined address
MOV EEA, A
MOV A, EEPROM_DATA           ; user defined data
MOV EED, A
MOV A, 040H                  ; setup memory pointer MP1
MOV MP1, A                   ; MP1 points to EEC register
MOV A, 01H                   ; setup Bank Pointer
MOV BP, A
SET IAR1.3                   ; set WREN bit, enable write operations
SET IAR1.2                   ; start Write Cycle - set WR bit
SET EMI
BACK:
SZ IAR1.2                    ; check for write cycle end
JMP BACK
CLR IAR1                     ; disable EEPROM write
CLR BP
```

Oscillators

Various oscillator options offer the user a wide range of functions according to their various application requirements. The flexible features of the oscillator functions ensure that the best optimisation can be achieved in terms of speed and power saving. Oscillator selections and operation are selected through registers.

Oscillator Overview

In addition to being the source of the main system clock the oscillators also provide clock sources for the Watchdog Timer and Time Base Interrupts. Fully integrated internal oscillators, requiring no external components, are provided to form a wide range of both fast and slow system oscillators. The higher frequency oscillators provide higher performance but carry with it the disadvantage of higher power requirements, while the opposite is of course true for the lower frequency oscillators. With the capability of dynamically switching between fast and slow system clock, the device has the flexibility to optimize the performance/power ratio, a feature especially important in power sensitive portable applications.

Device	Type	Name	Freq.
BS83B04A-4	Internal High Speed RC	HIRC	8MHz
Others	Internal High Speed RC	HIRC	8/12/16MHz
All devices	Internal Low Speed RC	LIRC	32kHz

Oscillator Types

System Clock Configurations

There are two methods of generating the system clock, a high speed oscillator and a low speed oscillator. The high speed oscillator is the internal 8MHz RC oscillator for the BS83B04A-4 and 8MHz, 12MHz, 16MHz RC oscillator for the others. The low speed oscillator is the internal 32kHz (LIRC) oscillator. Selecting whether the low or high speed oscillator is used as the system oscillator is implemented using the HLCLK bit and CKS2~CKS0 bits in the SMOD register and as the system clock can be dynamically selected.

The actual source clock used for the high speed and the low speed oscillators is chosen via registers. The frequency of the slow speed or high speed system clock is also determined using the HLCLK bit and CKS2~CKS0 bits in the SMOD register. Note that two oscillator selections must be made namely one high speed and one low speed system oscillators. It is not possible to choose a no-oscillator selection for either the high or low speed oscillator.

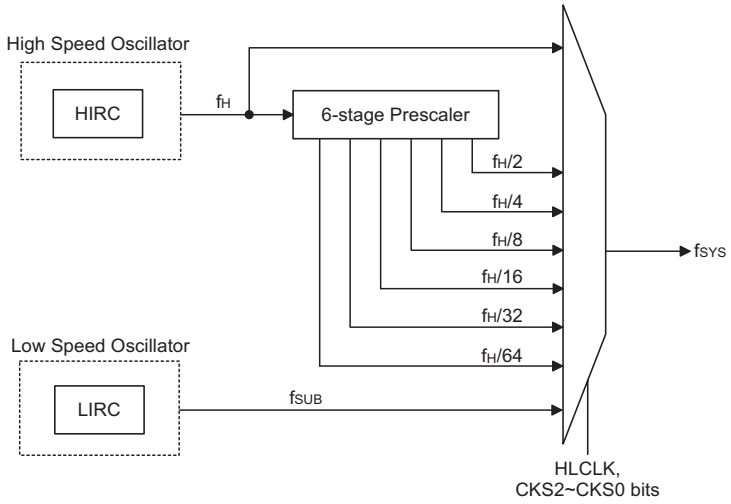

System Clock Configurations

Internal RC Oscillator – HIRC

The internal RC oscillator is a fully integrated system oscillator requiring no external components. The internal RC oscillator has a power on default frequency of 8MHz but can be selected to be either 8MHz, 12MHz or 16MHz using the HIRCS1 and HIRCS0 bits in the CTRL register for the devices except BS83B04A-4. Device trimming during the manufacturing process and the inclusion of internal frequency compensation circuits are used to ensure that the influence of the power supply voltage, temperature and process variations on the oscillation frequency are minimised.

Internal 32kHz Oscillator – LIRC

The Internal 32kHz System Oscillator is the low frequency oscillator. It is a fully integrated RC oscillator with a typical frequency of 32kHz at 5V, requiring no external components for its implementation. Device trimming during the manufacturing process and the inclusion of internal frequency compensation circuits are used to ensure that the influence of the power supply voltage, temperature and process variations on the oscillation frequency are minimised. After power on this

LIRC oscillator will be permanently enabled; there is no provision to disable the oscillator using.

Operating Modes and System Clocks

Present day applications require that their microcontrollers have high performance but often still demand that they consume as little power as possible, conflicting requirements that are especially true in battery powered portable applications. The fast clocks required for high performance will by their nature increase current consumption and of course vice-versa, lower speed clocks reduce current consumption. As Holtek has provided this device with both high and low speed clock sources and the means to switch between them dynamically, the user can optimise the operation of their microcontroller to achieve the best performance/power ratio.

System Clocks

The main system clock, can come from either a high frequency, f_H, or low frequency, f_{SUB}, source, and is selected using the HLCLK bit and CKS2~CKS0 bits in the SMOD register. Both the high and low speed system clocks are sourced from internal RC oscillators.

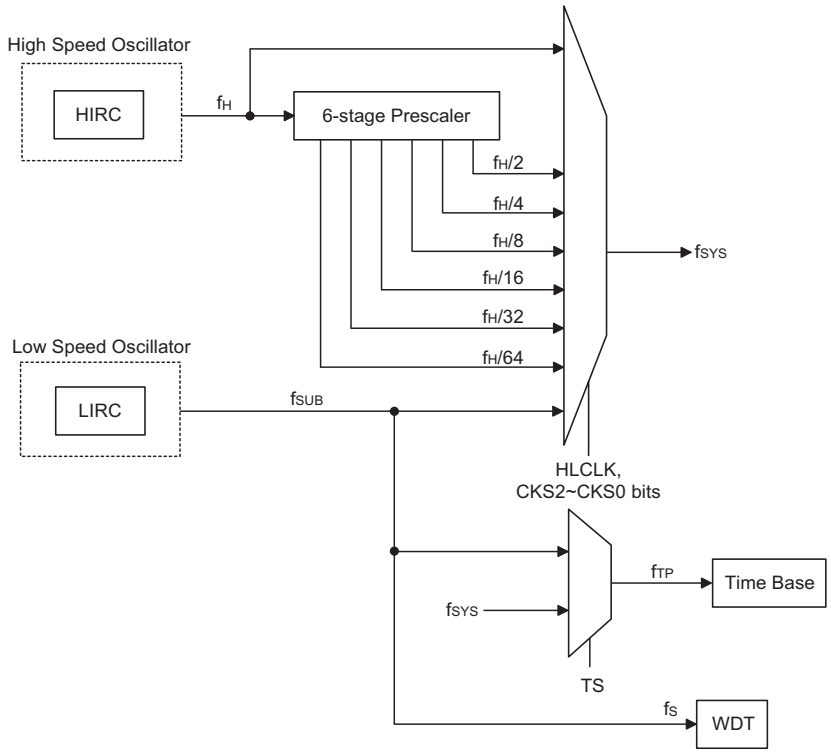

System Clock Configurations

Note: When the system clock source f_{SYS} is switched to f_{SUB} from f_H, the high speed oscillation will stop to conserve the power. Thus there is no f_H~f_H/64 for peripheral circuit to use.

System Operation Modes

There are five different modes of operation for the microcontroller, each one with its own special characteristics and which can be chosen according to the specific performance and power requirements of the application. There are two modes allowing normal operation of the microcontroller, the NORMAL Mode and SLOW Mode. The remaining three modes, the SLEEP, IDLE0 and IDLE1 Mode are used when the microcontroller CPU is switched off to conserve power.

Operating Mode	Description			
	CPU	f_{SYS}	f_{SUB}	f_S
NORMAL mode	On	f_H~f_H/64	On	On
SLOW mode	On	f_{SUB}	On	On
ILDE0 mode	Off	Off	On	On
IDLE1 mode	Off	On	On	On
SLEEP mode	Off	Off	On	On

NORMAL Mode

As the name suggests this is one of the main operating modes where the microcontroller has all of its functions operational and where the system clock is provided by the high speed oscillator. This mode operates allowing the microcontroller to operate normally with a clock source will come from the high speed oscillator, HIRC. The high speed oscillator will however first be divided by a ratio ranging from 1 to 64, the actual ratio being selected by the CKS2~CKS0 and HLCLK bits in the SMOD register. Although a high speed oscillator is used, running the microcontroller at a divided clock ratio reduces the operating current.

SLOW Mode

This is also a mode where the microcontroller operates normally although now with a slower speed clock source. The clock source used will be from f_{SUB}. Running the microcontroller in this mode allows it to run with much lower operating currents. In the SLOW Mode, the f_H is off.

SLEEP Mode

The SLEEP Mode is entered when an HALT instruction is executed and when the IDLEN bit in the SMOD register is low. In the SLEEP mode the CPU will be stopped. However the f_{SUB} clocks will continue to run the Watchdog Timer will continue to operate.

IDLE0 Mode

The IDLE0 Mode is entered when a HALT instruction is executed and when the IDLEN bit in the SMOD register is high and the FSYSON bit in the CTRL register is low. In the IDLE0 Mode the system oscillator will be stop and will therefore be inhibited from driving the CPU.

IDLE1 Mode

The IDLE1 Mode is entered when a HALT instruction is executed and when the IDLEN bit in the SMOD register is high and the FSYSON bit in the CTRL register is high. In the IDLE1 Mode the system oscillator will be inhibited from driving the CPU but may continue to provide a clock source to keep some peripheral functions operational. In the IDLE1 Mode, the system oscillator will continue to run, and this system oscillator may be the high speed or low speed system oscillator.

Control Register

The SMOD register is used to control the internal clocks within the device.

SMOD Register

Bit	7	6	5	4	3	2	1	0
Name	CKS2	CKS1	CKS0	—	LTO	HTO	IDLEN	HLCLK
R/W	R/W	R/W	R/W	—	R	R	R/W	R/W
POR	0	0	0	—	0	0	1	1

Bit 7~5 **CKS2~CKS0:** The system clock selection when HLCLK is "0"
000: f_{SUB} (f_{LIRC})
001: f_{SUB} (f_{LIRC})
010: $f_H/64$
011: $f_H/32$
100: $f_H/16$
101: $f_H/8$
110: $f_H/4$
111: $f_H/2$
These three bits are used to select which clock is used as the system clock source. In addition to the system clock source, which can be LIRC, a divided version of the high speed system oscillator can also be chosen as the system clock source.

Bit 4 Unimplemented, read as "0"

Bit 3 **LTO:** LIRC System OSC SST ready flag
0: Not ready
1: Ready
This is the low speed system oscillator SST ready flag which indicates when the low speed system oscillator is stable after power on reset or a wake-up has occurred. The flag will change to a high level after 1~2 cycles.

Bit 2 **HTO:** HIRC System OSC SST ready flag
0: Not ready
1: Ready
This is the high speed system oscillator SST ready flag which indicates when the high speed system oscillator is stable after a wake-up has occurred. This flag is cleared to "0" by hardware when the device is powered on and then changes to a high level after the high speed system oscillator is stable. Therefore this flag will always be read as "1" by the application program after device power-on. The flag will be low when in the SLEEP or IDLE0 Mode but after power on reset or a wake-up has occurred, the flag will change to a high level after 15~16 clock cycles if the HIRC oscillator is used.

Bit 1 **IDLEN:** IDLE Mode Control
0: Disable
1: Enable
This is the IDLE Mode Control bit and determines what happens when the HALT instruction is executed. If this bit is high, when a HALT instruction is executed the device will enter the IDLE Mode. In the IDLE1 Mode the CPU will stop running but the system clock will continue to keep the peripheral functions operational, if FSYSON bit is high. If FSYSON bit is low, the CPU and the system clock will all stop in IDLE0 mode. If the bit is low the device will enter the SLEEP Mode when a HALT instruction is executed.

Bit 0 **HLCLK:** System Clock Selection
0: $f_H/2$~$f_H/64$ or f_{SUB}
1: f_H
This bit is used to select if the f_H clock or the $f_H/2$~$f_H/64$ or f_{SUB} clock is used as the system clock. When the bit is high the f_H clock will be selected and if low the $f_H/2$~$f_H/64$ or f_{SUB} clock will be selected. When system clock switches from the f_H clock to the f_{SUB} clock and the f_H clock will be automatically switched off to conserve power.

CTRL Register – BS83B04A-4

Bit	7	6	5	4	3	2	1	0
Name	FSYSON	—	—	—	—	LVRF	LRF	WRF
R/W	R/W	—	—	—	—	R/W	R/W	R/W
POR	0	—	—	—	—	×	0	0

"×" unknown

Bit 7 **FSYSON:** f_{SYS} Control in IDLE Mode
0: Disable
1: Enable

Bit 6~3 Unimplemented, read as "0"

Bit 2 **LVRF:** LVR function reset flag
0: Not occur
1: Occurred
This bit is set to 1 when a specific Low Voltage Reset situation condition occurs. This bit can only be cleared to 0 by the application program.

Bit 1 **LRF:** LVRC Control register software reset flag
0: Not occur
1: Occurred
This bit is set to 1 if the LVRC register contains any non defined LVR voltage register values. This in effect acts like a software reset function. This bit can only be cleared to 0 by the application program.

Bit 0 **WRF:** WDT Control register software reset flag
0: Not occur
1: Occurred
This bit is set to 1 by the WDT Control register software reset and cleared by the application program. Note that this bit can only be cleared to 0 by the application program.

CTRL Register – except BS83B04A-4

Bit	7	6	5	4	3	2	1	0
Name	FSYSON	—	HIRCS1	HIRCS0	—	LVRF	LRF	WRF
R/W	R/W	—	R/W	R/W	—	R/W	R/W	R/W
POR	0	—	0	0	—	×	0	0

"×" unknown

Bit 7 **FSYSON:** f_{SYS} Control in IDLE Mode
0: Disable
1: Enable

Bit 6 Unimplemented, read as "0"

Bit 5~4 **HIRCS1~HIRCS0:** High frequency clock select
00: 8MHz
01: 16MHz
10: 12MHz
11: 8MHz

Bit 3 Unimplemented, read as "0"

Bit 2 **LVRF:** LVR function reset flag
0: Not occur
1: Occurred
This bit is set to 1 when a specific Low Voltage Reset situation condition occurs. This bit can only be cleared to 0 by the application program.

Bit 1 **LRF:** LVRC Control register software reset flag
0: Not occur
1: Occurred
This bit is set to 1 if the LVRC register contains any non defined LVR voltage register values. This in effect acts like a software reset function. This bit can only be cleared to 0 by the application program.

Bit 0 **WRF:** WDT Control register software reset flag
0: Not occur
1: Occurred
This bit is set to 1 by the WDT Control register software reset and cleared by the application program. Note that this bit can only be cleared to 0 by the application program.

Operating Mode Switching

The device can switch between operating modes dynamically allowing the user to select the best performance/power ratio for the present task in hand. In this way microcontroller operations that do not require high performance can be executed using slower clocks thus requiring less operating current and prolonging battery life in portable applications.

In simple terms, Mode Switching between the NORMAL Mode and SLOW Mode is executed using the HLCLK bit and CKS2~CKS0 bits in the SMOD register while Mode Switching from the NORMAL/SLOW Modes to the SLEEP/IDLE Modes is executed via the HALT instruction. When a HALT instruction is executed, whether the device enters the IDLE Mode or the SLEEP Mode is determined by the condition of the IDLEN bit in the SMOD register and FSYSON in the CTRL register.

When the HLCLK bit switches to a low level, which implies that clock source is switched from the high speed clock source, f_H, to the clock source, $f_H/2$~$f_H/64$ or f_{SUB}. If the clock is from the f_{SUB}, the high speed clock source will stop running to conserve power. When this happens it must be noted that the $f_H/16$ and $f_H/64$ internal clock sources will also stop running. The accompanying flowchart shows what happens when the device moves between the various operating modes.

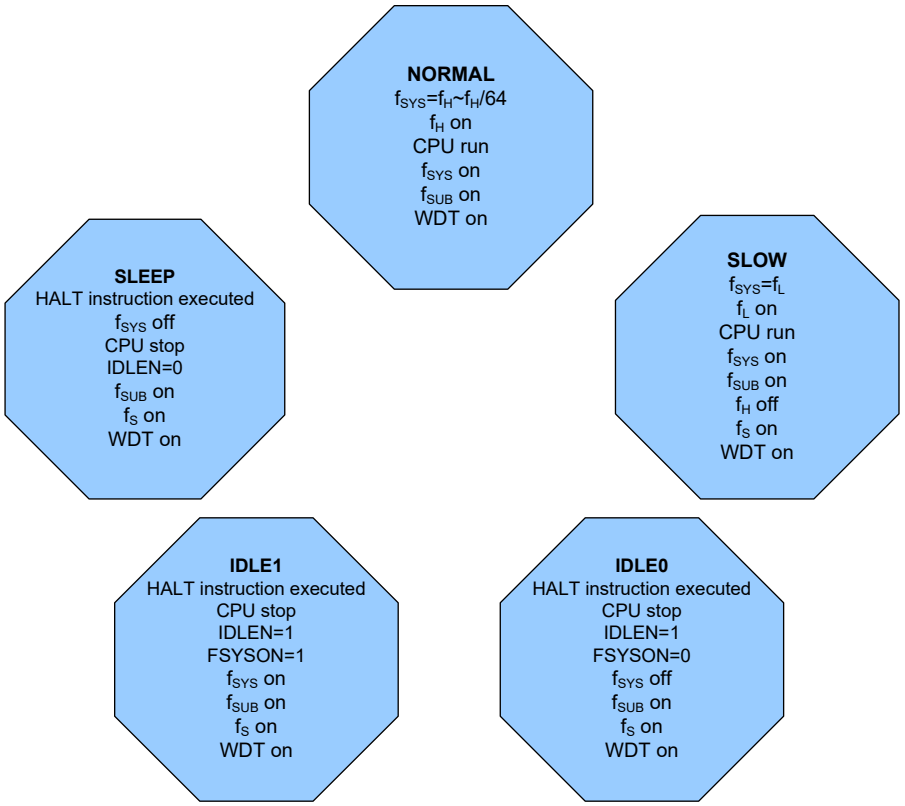

NORMAL Mode to SLOW Mode Switching

When running in the NORMAL Mode, which uses the high speed system oscillator, and therefore consumes more power, the system clock can switch to run in the SLOW Mode by setting the HLCLK bit to “0” and setting the CKS2~CKS0 bits to “000” or “001” in the SMOD register.This will then use the low speed system oscillator which will consume less power. Users may decide to do this for certain operations which do not require high performance and can subsequently reduce power consumption.

The SLOW Mode is sourced from the LIRC oscillator and therefore requires this oscillator to be stable before full mode switching occurs. This is monitored using the LTO bit in the SMOD register.

SLOW Mode to NORMAL Mode Switching

In SLOW Mode the system uses LIRC low speed system oscillator. To switch back to the NORMAL Mode, where the high speed system oscillator is used, the HLCLK bit should be set to “1” or HLCLK bit is “0”, but CKS2~CKS0 is set to “010”, “011”, “100”, “101”, “110” or “111”. As a certain amount of time will be required for the high frequency clock to stabilise, the status of the HTO bit is checked. The amount of time required for high speed system oscillator stabilization depends upon which high speed system oscillator type is used.

Entering the SLEEP Mode

There is only one way for the device to enter the SLEEP Mode and that is to execute the “HALT” instruction in the application program with the IDLEN bit in SMOD register equal to “0”. When this instruction is executed under the conditions described above, the following will occur:

- The system clock and Time Base clock will be stopped and the application program will stop at the “HALT” instruction, but the f_{SUB} clock will be on.
- The Data Memory contents and registers will maintain their present condition.
- The WDT will be cleared and resume counting.
- The I/O ports will maintain their present conditions.
- In the status register, the Power Down flag, PDF, will be set and the Watchdog time-out flag, TO, will be cleared.

Entering the IDLE0 Mode

There is only one way for the device to enter the IDLE0 Mode and that is to execute the “HALT” instruction in the application program with the IDLEN bit in SMOD register equal to “1” and the FSYSON bit in CTRL register equal to “0”. When this instruction is executed under the conditions described above, the following will occur:

- The system clock will be stopped and the application program will stop at the “HALT” instruction, but the Time Base and the low frequency f_{SUB} clock will be on.
- The Data Memory contents and registers will maintain their present condition.
- The WDT will be cleared and resume counting.
- The I/O ports will maintain their present conditions.
- In the status register, the Power Down flag, PDF, will be set and the Watchdog time-out flag, TO, will be cleared.

Entering the IDLE1 Mode

There is only one way for the device to enter the IDLE1 Mode and that is to execute the "HALT" instruction in the application program with the IDLEN bit in SMOD register equal to "1" and the FSYSON bit in CTRL register equal to "1". When this instruction is executed under the conditions described above, the following will occur:

- The system clock and the low frequency f_{SUB} will be on and the application program will stop at the "HALT" instruction.
- The Data Memory contents and registers will maintain their present condition.
- The WDT will be cleared and resume counting.
- The I/O ports will maintain their present conditions.
- In the status register, the Power Down flag, PDF, will be set and the Watchdog time-out flag, TO, will be cleared.

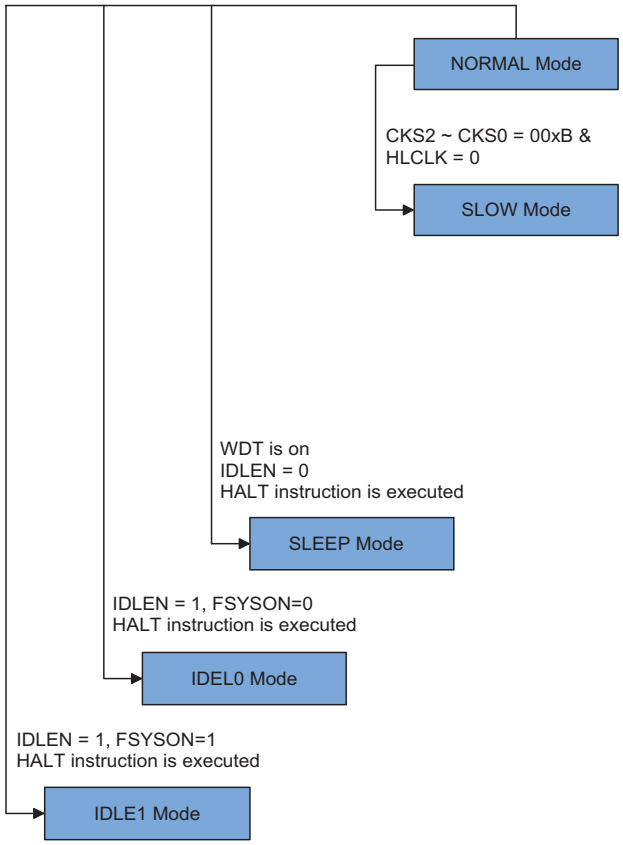

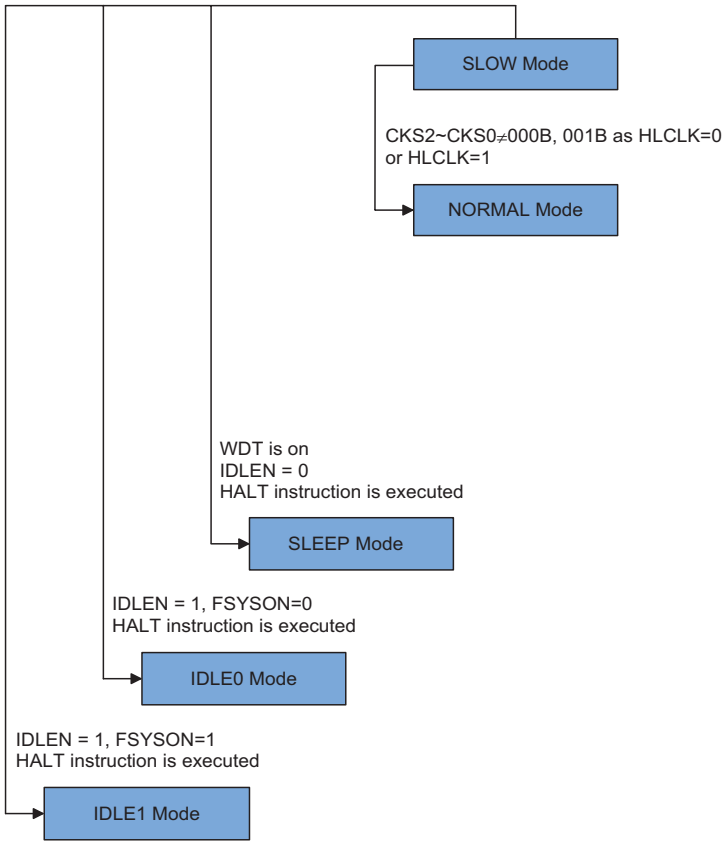

Standby Current Considerations

As the main reason for entering the SLEEP or IDLE Mode is to keep the current consumption of the device to as low a value as possible, perhaps only in the order of several micro-amps except in the IDLE1 Mode, there are other considerations which must also be taken into account by the circuit designer if the power consumption is to be minimised. Special attention must be made to the I/O pins on the device. All high-impedance input pins must be connected to either a fixed high or low level as any floating input pins could create internal oscillations and result in increased current consumption. This also applies to devices which have different package types, as there may be unbonbed pins. These must either be setup as outputs or if setup as inputs must have pull-high resistors connected.

Care must also be taken with the loads, which are connected to I/O pins, which are setup as outputs. These should be placed in a condition in which minimum current is drawn or connected only to external circuits that do not draw current, such as other CMOS inputs. In the IDLE1 Mode the system oscillator is on, if the system oscillator is from the high speed system oscillator, the additional standby current will also be perhaps in the order of several hundred micro-amps.

Wake-up

After the system enters the SLEEP or IDLE Mode, it can be woken up from one of various sources listed as follows:

- An external falling edge on Port A
- A system interrupt
- A WDT overflow

If the device is woken up by a WDT overflow, a Watchdog Timer reset will be initiated. Although both of these wake-up methods will initiate a reset operation, the actual source of the wake-up can be determined by examining the TO and PDF flags. The PDF flag is cleared by a system power-up or executing the clear Watchdog Timer instructions and is set when executing the "HALT" instruction. The TO flag is set if a WDT time-out occurs, and causes a wake-up that only resets the Program Counter and Stack Pointer, the other flags remain in their original status.

Each pin on Port A can be setup using the PAWU register to permit a negative transition on the pin to wake-up the system. When a Port A pin wake-up occurs, the program will resume execution at the instruction following the "HALT" instruction. If the system is woken up by an interrupt, then two possible situations may occur. The first is where the related interrupt is disabled or the interrupt is enabled but the stack is full, in which case the program will resume execution at the instruction following the "HALT" instruction. In this situation, the interrupt which woke-up the device will not be immediately serviced, but will rather be serviced later when the related interrupt is finally enabled or when a stack level becomes free. The other situation is where the related interrupt is enabled and the stack is not full, in which case the regular interrupt response takes place. If an interrupt request flag is set high before entering the SLEEP or IDLE Mode, the wake-up function of the related interrupt will be disabled.

System Oscillator	Wake-up Time (SLEEP Mode)	Wake-up Time (IDLE0 Mode)	Wake-up Time (IDLE1 Mode)
HIRC	15~16 HIRC cycles		1~2 HIRC cycles
LIRC	1~2 LIRC cycles		1~2 LIRC cycles

Wake-Up Time

Programming Considerations

The high speed and low speed oscillators both use the same SST counter. For example, if the system is woken up from the SLEEP Mode the HIRC oscillator needs to start-up from an off state.

If the device is woken up from the SLEEP Mode to the NORMAL Mode, the high speed system oscillator needs an SST period. The device will execute the first instruction after HTO is high.

Watchdog Timer

The Watchdog Timer is provided to prevent program malfunctions or sequences from jumping to unknown locations, due to certain uncontrollable external events such as electrical noise.

Watchdog Timer Clock Source

The Watchdog Timer clock source is provided by the internal f_{SUB} clock which is in turn supplied by the LIRC oscillator. The Watchdog Timer source clock is then subdivided by a ratio of 2^8 to 2^{18} to give longer timeouts, the actual value being chosen using the WS2~WS0 bits in the WDTC register. The LIRC internal oscillator has an approximate period of 32kHz at a supply voltage of 5V. However, it should be noted that this specified internal clock period can vary with V_{DD}, temperature and process variations.

Watchdog Timer Control Register

A single register, WDTC, controls the required timeout period as well as the enable operation. The WDTC register is initiated to 01010011B at any reset but keeps unchanged at the WDT time-out occurrence in a power down state.

WDTC Register

Bit	7	6	5	4	3	2	1	0
Name	WE4	WE3	WE2	WE1	WE0	WS2	WS1	WS0
R/W	R/W	R/W	R/W	R/W	R/W	R/W	R/W	R/W
POR	0	1	0	1	0	0	1	1

Bit 7~3 **WE4 ~ WE0:** WDT function software control
10101B: Enabled
01010B: Enabled (Default)
Other values: Reset MCU (Reset will be active after 2~3 LIRC clock for debounce time.)
If the MCU reset caused by the WE [4:0] in WDTC software reset, the WRF flag of CTRL register will be set.

Bit 2~0 **WS2~WS0:** WDT Time-out period selection
000: $2^8/f_{SUB}$
001: $2^{10}/f_{SUB}$
010: $2^{12}/f_{SUB}$
011: $2^{14}/f_{SUB}$
100: $2^{15}/f_{SUB}$
101: $2^{16}/f_{SUB}$
110: $2^{17}/f_{SUB}$
111: $2^{18}/f_{SUB}$
These three bits determine the division ratio of the Watchdog Timer source clock, which in turn determines the timeout period.

CTRL Register – BS83B04A-4

Bit	7	6	5	4	3	2	1	0
Name	FSYSON	—	—	—	—	LVRF	LRF	WRF
R/W	R/W	—	—	—	—	R/W	R/W	R/W
POR	0	—	—	—	—	×	0	0

"×" unknown

Bit 7 **FSYSON:** f_{SYS} Control IDLE Mode
Describe elsewhere

Bit 6~3 Unimplemented, read as "0"

Bit 2 **LVRF:** LVR function reset flag
Describe elsewhere

Bit 1 **LRF:** LVR Control register software reset flag
Describe elsewhere

Bit 0 **WRF:** WDT Control register software reset flag
0: Not occur
1: Occurred
This bit is set to 1 by the WDT Control register software reset and cleared by the application program. Note that this bit can only be cleared to 0 by the application program.

CTRL Register – except BS83B04A-4

Bit	7	6	5	4	3	2	1	0
Name	FSYSON	—	HIRCS1	HIRCS0	—	LVRF	LRF	WRF
R/W	R/W	—	R/W	R/W	—	R/W	R/W	R/W
POR	0	—	0	0	—	×	0	0

"×" unknown

Bit 7 **FSYSON:** f_{SYS} Control IDLE Mode
Describe elsewhere

Bit 6 Unimplemented, read as "0"

Bit 5~4 **HIRCS1~HIRCS0:** High frequency clock select
Describe elsewhere

Bit 3 Unimplemented, read as "0"

Bit 2 **LVRF:** LVR function reset flag
Describe elsewhere

Bit 1 **LRF:** LVR Control register software reset flag
Describe elsewhere

Bit 0 **WRF:** WDT Control register software reset flag
0: Not occur
1: Occurred
This bit is set to 1 by the WDT Control register software reset and cleared by the application program. Note that this bit can only be cleared to 0 by the application program.

Watchdog Timer Operation

In these devices the Watchdog Timer supplied by the f_{SUB} oscillator and is therefore always on. The Watchdog Timer operates by providing a device reset when its timer overflows. This means that in the application program and during normal operation the user has to strategically clear the Watchdog Timer before it overflows to prevent the Watchdog Timer from executing a reset. This is done using the clear watchdog instructions. If the program malfunctions for whatever reason, jumps to an unknown location, or enters an endless loop, the clear WDT instruction will not be executed in the correct manner, in which case the Watchdog Timer will overflow and reset the device. There are five bits, WE4~WE0, in the WDTC register to enable the WDT function. When the WE4~WE0 bits value is equal to 01010B or 10101B, the WDT function is enabled. However, if the WE4~WE0 bits are changed to any other values except 01010B and 10101B, which is caused by the environmental noise, it will reset the microcontroller after 2~3 LIRC clock cycles.

Under normal program operation, a Watchdog Timer time-out will initialise a device reset and set the status bit TO. However, if the system is in the SLEEP or IDLE Mode, when a Watchdog Timer time-out occurs, the TO bit in the status register will be set and only the Program Counter and Stack Pointer will be reset. Three methods can be adopted to clear the contents of the Watchdog Timer. The first is a WDT reset, which means a certain value is written into the WE4~WE0 bit filed except 01010B and 10101B, the second is using the Watchdog Timer software clear instructions and the third is via a HALT instruction.

There is only one method of using software instruction to clear the Watchdog Timer. That is to use the single “CLR WDT” instruction to clear the WDT.

The maximum time-out period is when the 2^{18} division ratio is selected. As an example, with a 32kHz LIRC oscillator as its source clock, this will give a maximum watchdog period of around 8 seconds for the 2^{18} division ratio, and a minimum timeout of 7.8ms for the 2^8 division ration.

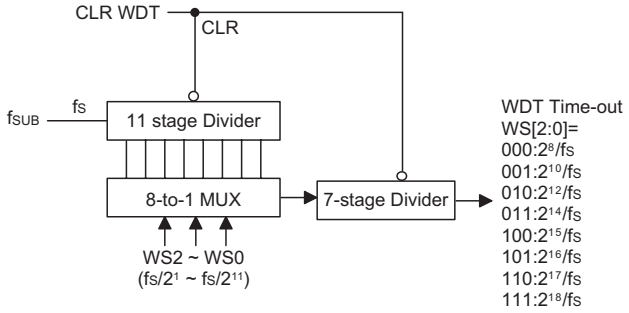

Watchdog Timer

Reset and Initialisation

A reset function is a fundamental part of any microcontroller ensuring that the device can be set to some predetermined condition irrespective of outside parameters. The most important reset condition is after power is first applied to the microcontroller. In this case, internal circuitry will ensure that the microcontroller, after a short delay, will be in a well defined state and ready to execute the first program instruction. After this power-on reset, certain important internal registers will be set to defined states before the program commences. One of these registers is the Program Counter, which will be reset to zero forcing the microcontroller to begin program execution from the lowest Program Memory address.

Another type of reset is when the Watchdog Timer overflows and resets the microcontroller. All typesof reset operations result in different register conditions being setup. Another reset exists in the form of a Low Voltage Reset, LVR, where a full reset is implemented in situations where the power supply voltage falls below a certain threshold.

Reset Functions

There are five ways in which a microcontroller reset can occur, through events occurring internally.

Power-on Reset

The most fundamental and unavoidable reset is the one that occurs after power is first applied to the microcontroller. As well as ensuring that the Program Memory begins execution from the first memory address, a power-on reset also ensures that certain other registers are preset to known conditions. All the I/O port and port control registers will power up in a high condition ensuring that all pins will be first set to inputs.

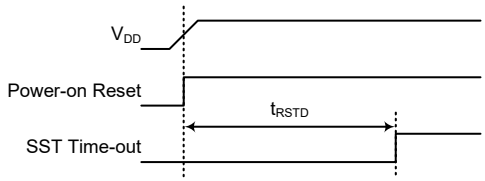

Power-On Reset Timing Chart

Low Voltage Reset – LVR

The microcontroller contains a low voltage reset circuit in order to monitor the supply voltage of the device. The LVR function is always enabled with a specific LVR voltage, V_{LVR}. If the supply voltage of the device drops to within a range of 0.9V~V_{LVR} such as might occur when changing the battery, the LVR will automatically reset the device internally and the LVRF bit in the CTRL register will also be set to1. For a valid LVR signal, a low voltage, i.e., a voltage in the range between 0.9V~V_{LVR} must exist for greater than the value t_{LVR} specified in the A.C. characteristics. If the low voltage state does not exceed this value, the LVR will ignore the low supply voltage and will not perform a reset function. The actual V_{LVR} is set by the LVRC register. When this happens, the LRF bit in the CTRL register will be set to 1.

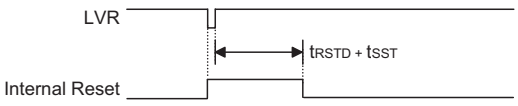

Low Voltage Reset Timing Chart

• **LVRC Register – BS83B08A-3/BS83B12A-3/BS83B16A-3**

Bit	7	6	5	4	3	2	1	0
Name	LVS7	LVS6	LVS5	LVS4	LVS3	LVS2	LVS1	LVS0
R/W	R/W	R/W	R/W	R/W	R/W	R/W	R/W	R/W
POR	0	1	0	1	0	1	0	1

Bit 7 **LVS7 ~ LVS0:** LVR Voltage Select control
01010101: 2.55V(default)
00110011: 2.55V
10011001: 2.55V
10101010: 2.55V
Other values: MCU reset (reset will be active after 2~3 LIRC clock for debounce time)
Note: S/W can write 00H~FFH to control LVR voltage, even to S/W reset MCU. If the MCU reset caused LVRC software reset, the LRF flag of CTRL register will be set.

• **LVRC Register – BS83B04A-4/BS83B08A-4/BS83B12A-4/BS83B16A-4**

Bit	7	6	5	4	3	2	1	0
Name	LVS7	LVS6	LVS5	LVS4	LVS3	LVS2	LVS1	LVS0
R/W	R/W	R/W	R/W	R/W	R/W	R/W	R/W	R/W
POR	0	1	0	1	0	1	0	1

Bit 7 **LVS7 ~ LVS0:** LVR Voltage Select control
01010101: 2.10V(default)
00110011: 2.10V
10011001: 2.10V
10101010: 2.10V
Other values: MCU reset (reset will be active after 2~3 LIRC clock for debounce time)
Note: S/W can write 00H~FFH to control LVR voltage, even to S/W reset MCU. If the MCU reset caused LVRC software reset, the LRF flag of CTRL register will be set.

• **CTRL Register – BS83B04A-4**

Bit	7	6	5	4	3	2	1	0
Name	FSYSON	—	—	—	—	LVRF	LRF	WRF
R/W	R/W	—	—	—	—	R/W	R/W	R/W
POR	0	—	—	—	—	×	0	0

"×" unknown

Bit 7 **FSYSON:** f_{SYS} Control IDLE Mode
Describe elsewhere

Bit 6~3 Unimplemented, read as "0"

Bit 2 **LVRF:** LVR function reset flag
0: Not occur
1: Occurred
This bit is set to 1 when a specific Low Voltage Reset situation condition occurs. This bit can only be cleared to 0 by the application program.

Bit 1 **LRF:** LVR Control register software reset flag
0: Not occur
1: Occurred
This bit is set to 1 if the LVRC register contains any non defined LVR voltage register values. This in effect acts like a software reset function. This bit can only be cleared to 0 by the application program.

Bit 0 **WRF:** WDT Control register software reset flag
Describe elsewhere

- **CTRL Register – except BS83B04A-4**

Bit	7	6	5	4	3	2	1	0
Name	FSYSON	—	HIRCS1	HIRCS0	—	LVRF	LRF	WRF
R/W	R/W	—	R/W	R/W	—	R/W	R/W	R/W
POR	0	—	0	0	—	×	0	0

"×" unknown

Bit 7 **FSYSON:** f_{SYS} Control IDLE Mode
Describe elsewhere

Bit 6 Unimplemented, read as "0"

Bit 5~4 **HIRCS1~HIRCS0:** High frequency clock select
Describe elsewhere

Bit 3 Unimplemented, read as "0"

Bit 2 **LVRF:** LVR function reset flag
0: Not occur
1: Occurred
This bit is set to 1 when a specific Low Voltage Reset situation condition occurs. This bit can only be cleared to 0 by the application program.

Bit 1 **LRF:** LVR Control register software reset flag
0: Not occur
1: Occurred
This bit is set to 1 if the LVRC register contains any non defined LVR voltage register values. This in effect acts like a software reset function. This bit can only be cleared to 0 by the application program.

Bit 0 **WRF:** WDT Control register software reset flag
Describe elsewhere

Watchdog Time-out Reset during Normal Operation

The Watchdog time-out Reset during normal operation is the same as a LVR reset except that the Watchdog time-out flag TO will be set to "1".

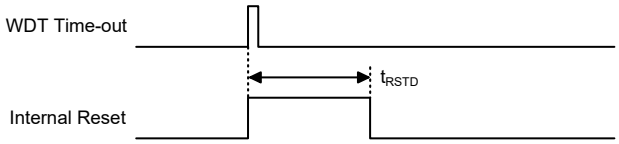

Note: t_{RSTD} is power-on delay, typical time=16.7ms

WDT Time-out Reset during Normal Operation Timing Chart

Watchdog Time-out Reset during SLEEP or IDLE Mode

The Watchdog time-out Reset during SLEEP or IDLE Mode is a little different from other kinds of reset. Most of the conditions remain unchanged except that the Program Counter and the Stack Pointer will be cleared to "0" and the TO flag will be set to "1". Refer to the A.C. Characteristics for t_{SST} details.

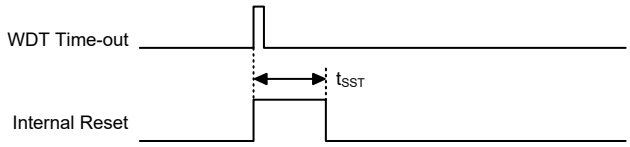

Note: The t_{SST} is 15~16 clock cycles if the system clock source is provided by the HIRC. The t_{SST} is 1~2 clock for the LIRC.

WDT Time-out Reset during SLEEP or IDLE Timing Chart

Reset Initial Conditions

The different types of reset described affect the reset flags in different ways. These flags, known as PDF and TO are located in the status register and are controlled by various microcontroller operations, such as the SLEEP or IDLE Mode function or Watchdog Timer. The reset flags are shown in the table:

TO	PDF	RESET Conditions
0	0	Power-on reset
u	u	LVR reset during NORMAL or SLOW Mode operation
1	u	WDT time-out reset during NORMAL or SLOW Mode operation
1	1	WDT time-out reset during IDLE or SLEEP Mode operation

"u" stands for unchanged

The following table indicates the way in which the various components of the microcontroller are affected after a power-on reset occurs.

Item	Condition After RESET
Program Counter	Reset to zero
Interrupts	All interrupts will be disabled
WDT	Clear after reset, WDT begins counting
Timer/Eventer Counter	Timer/Eventer Counter will be turned off
Input/Output Ports	I/O ports will be setup as inputs
Stack Pointer	Stack Pointer will point to the top of the stack

The different kinds of resets all affect the internal registers of the microcontroller in different ways. To ensure reliable continuation of normal program execution after a reset occurs, it is important to know what condition the microcontroller is in after a particular reset occurs. The following table describes how each type of reset affects each of the microcontroller internal registers.

BS83B04A-4 Register

Register	LVR&power on	WDT Overflow (Normal Mode)	WDT Overflow (HALT Mode)
IAR0	- - - - - - - -	- - - - - - - -	- - - - - - - -
MP0	x x x x x x x x	x x x x x x x x	u u u u u u u u
IAR1	- - - - - - - -	- - - - - - - -	- - - - - - - -
MP1	x x x x x x x x	x x x x x x x x	u u u u u u u u
BP	- - - - - - - 0	- - - - - - - 0	- - - - - - - u
ACC	x x x x x x x x	u u u u u u u u	u u u u u u u u

Register	LVR&power on	WDT Overflow (Normal Mode)	WDT Overflow (HALT Mode)
PCL	0000 0000	0000 0000	0000 0000
TBLP	xxxx xxxx	uuuu uuuu	uuuu uuuu
TBLH	xxxx xxxx	uuuu uuuu	uuuu uuuu
TBHP	---- -xxx	---- -uuu	---- -uuu
STATUS	--00 xxxx	--1u uuuu	--11 uuuu
SMOD	000- 0011	000- 0011	uuu- uuuu
CTRL	0--- 0x00	0--- 0x00	u--- uuuu
INTEG	---- --00	---- --00	---- --uu
INTC0	-000 0000	-000 0000	-uuu uuuu
INTC1	-000 -000	-000 -000	-uuu -uuu
SFS	---- ---0	---- ---0	---- ---u
LVRC	0101 0101	0101 0101	uuuu uuuu
PA	1111 1111	1111 1111	uuuu uuuu
PAC	1111 1111	1111 1111	uuuu uuuu
PAPU	0000 0000	0000 0000	uuuu uuuu
PAWU	0000 0000	0000 0000	uuuu uuuu
WDTC	0101 0011	0101 0011	uuuu uuuu
TBC	--00 ----	--00 ----	--uu ----
TMR	0000 0000	0000 0000	uuuu uuuu
TMRC	--00 -000	--00 -000	--uu -uuu
EEA	---0 0000	---0 0000	---u uuu
EED	0000 0000	0000 0000	0000 0000
TKTMR	0000 0000	0000 0000	uuuu uuuu
TKC0	-000 0000	-000 0000	-uuu uuuu
TK16DL	0000 0000	0000 0000	uuuu uuuu
TK16DH	0000 0000	0000 0000	uuuu uuuu
TKC1	---- --11	---- --11	---- --uu
TKM016DL	0000 0000	0000 0000	uuuu uuuu
TKM016DH	0000 0000	0000 0000	uuuu uuuu
TKM0ROL	0000 0000	0000 0000	uuuu uuuu
TKM0ROH	---- --00	---- --00	---- --uu
TKM0C0	0000 0000	0000 0000	uuuu uuuu
TKM0C1	0-00 0000	0-00 0000	u-uu uuuu
IICC0	---- 000-	---- 000-	---- uuu-
IICC1	1000 0001	1000 0001	uuuu uuuu
IICD	0000 0000	0000 0000	uuuu uuuu
IICA	0000 0000	0000 0000	uuuu uuuu
I2CTOC	0000 0000	0000 0000	uuuu uuuu
EEC	---- 1111	---- 1111	---- uuuu

Note: “-” not implement

“u” stands for “unchanged”

“x” stands for “unknown”

BS83B08A-3/BS83B08A-4 Register

Register	LVR&power on	WDT Overflow (Normal Mode)	WDT Overflow (HALT Mode)
IAR0	---- ----	---- ----	---- ----
MP0	xxxx xxxx	xxxx xxxx	uuuu uuuu
IAR1	---- ----	---- ----	---- ----
MP1	xxxx xxxx	xxxx xxxx	uuuu uuuu
BP	---- ---0	---- ---0	---- ---u
ACC	xxxx xxxx	uuuu uuuu	uuuu uuuu
PCL	0000 0000	0000 0000	0000 0000
TBLP	xxxx xxxx	uuuu uuuu	uuuu uuuu
TBLH	xxxx xxxx	uuuu uuuu	uuuu uuuu
TBHP	---- xxxx	---- uuuu	---- uuuu
STATUS	--00 xxxx	--1u uuuu	--11 uuuu
SMOD	0000 0011	0000 0011	uuuu uuuu
CTRL	0-00 -x00	0-00 -x00	u-uu -uuu
INTEG	---- --00	---- --00	---- --uu
INTC0	-000 0000	-000 0000	-uuu uuuu
INTC1	-000 -000	-000 -000	-uuu -uuu
LVRC	0101 0101	0101 0101	uuuu uuuu
PA	1--1 1111	1--1 1111	u--u uuuu
PAC	1--1 1111	1--1 1111	u--u uuuu
PAPU	0--0 0000	0--0 0000	u--u uuuu
PAWU	0--0 0000	0--0 0000	u--u uuuu
WDTC	0101 0011	0101 0011	uuuu uuuu
TBC	--00 ----	--00 ----	--uu ----
TMR	0000 0000	0000 0000	uuuu uuuu
TMRC	--00 -000	--00 -000	--uu -uuu
EEA	--11 1111	--11 1111	--uu uuuu
EED	0000 0000	0000 0000	uuuu uuuu
PB	1111 1111	1111 1111	uuuu uuuu
PBC	1111 1111	1111 1111	uuuu uuuu
PBPU	0000 0000	0000 0000	uuuu uuuu
I2CTOC	0000 0000	0000 0000	uuuu uuuu
SIMC0	0000 -00-	0000 -00-	uuuu -uu-
SIMC1	0000 -000	0000 -000	uuuu -uuu
SIMD	0000 0000	0000 0000	uuuu uuuu
SIMC2	--11 1111	--11 1111	--uu uuuu
SIMA	0000 0000	0000 0000	uuuu uuuu
TKTMR	0000 0000	0000 0000	uuuu uuuu
TKC0	-000 0000	-000 0000	-uuu uuuu
TK16DL	0000 0000	0000 0000	uuuu uuuu
TK16DH	0000 0000	0000 0000	uuuu uuuu
TKC1	---- --11	---- --11	---- --uu
TKM016DL	0000 0000	0000 0000	uuuu uuuu
TKM016DH	0000 0000	0000 0000	uuuu uuuu
TKM0ROL	0000 0000	0000 0000	uuuu uuuu
TKM0ROH	---- --00	---- --00	---- --uu
TKM0C0	0000 0000	0000 0000	uuuu uuuu

Register	LVR&power on	WDT Overflow (Normal Mode)	WDT Overflow (HALT Mode)
TKM0C1	0-00 0000	0-00 0000	u-uu uuuu
TKM116DL	0000 0000	0000 0000	uuuu uuuu
TKM116DH	0000 0000	0000 0000	uuuu uuuu
TKM1ROL	0000 0000	0000 0000	uuuu uuuu
TKM1ROH	---- --00	---- --00	---- --uu
TKM1C0	0000 0000	0000 0000	uuuu uuuu
TKM1C1	0000 0000	0000 0000	uuuu uuuu
EEC	---- 0000	---- 0000	---- uuuu

Note: "-" not implement

"u" stands for "unchanged"

"x" stands for "unknown"

BS83B12A-3/BS83B12A-4 Register

Register	LVR&power on	WDT Overflow (Normal Mode)	WDT Overflow (HALT Mode)
IAR0	---- ----	---- ----	---- ----
MP0	xxxx xxxx	xxxx xxxx	uuuu uuuu
IAR1	---- ----	---- ----	---- ----
MP1	xxxx xxxx	xxxx xxxx	uuuu uuuu
BP	---- ---0	---- ---0	---- ---u
ACC	xxxx xxxx	uuuu uuuu	uuuu uuuu
PCL	0000 0000	0000 0000	0000 0000
TBLP	xxxx xxxx	uuuu uuuu	uuuu uuuu
TBLH	xxxx xxxx	uuuu uuuu	uuuu uuuu
TBHP	---- xxxx	---- uuuu	---- uuuu
STATUS	--00 xxxx	--1u uuuu	--11 uuuu
SMOD	0000 0011	0000 0011	uuuu uuuu
CTRL	0-00 -x00	0-00 -x00	u-uu -uuu
INTEG	---- --00	---- --00	---- --uu
INTC0	-000 0000	-000 0000	-uuu uuuu
INTC1	-000 -000	-000 -000	-uuu -uuu
LVRC	0101 0101	0101 0101	uuuu uuuu
PA	1--1 1111	1--1 1111	u--u uuuu
PAC	1--1 1111	1--1 1111	u--u uuuu
PAPU	0--0 0000	0--0 0000	u--u uuuu
PAWU	0--0 0000	0--0 0000	u--u uuuu
WDTC	0101 0011	0101 0011	uuuu uuuu
TBC	--00 ----	--00 ----	--uu ----
TMR	0000 0000	0000 0000	uuuu uuuu
TMRC	--00 -000	--00 -000	--uu -uuu
EEA	--11 1111	--11 1111	--uu uuuu
EED	0000 0000	0000 0000	uuuu uuuu
PB	1111 1111	1111 1111	uuuu uuuu
PBC	1111 1111	1111 1111	uuuu uuuu
PBPU	0000 0000	0000 0000	uuuu uuuu
I2CTOC	0000 0000	0000 0000	uuuu uuuu
SIMC0	0000 -00-	0000 -00-	uuuu -uu-

Register	LVR&power on	WDT Overflow (Normal Mode)	WDT Overflow (HALT Mode)
SIMC1	0000 -000	0000 -000	uuuu -uuu
SIMD	0000 0000	0000 0000	uuuu uuuu
SIMC2	--11 1111	--11 1111	--uu uuuu
SIMA	0000 0000	0000 0000	uuuu uuuu
PC	1111 1111	1111 1111	uuuu uuuu
PCC	1111 1111	1111 1111	uuuu uuuu
PCPU	0000 0000	0000 0000	uuuu uuuu
TKTMR	0000 0000	0000 0000	uuuu uuuu
TKC0	-000 0000	-000 0000	-uuu uuuu
TK16DL	0000 0000	0000 0000	uuuu uuuu
TK16DH	0000 0000	0000 0000	uuuu uuuu
TKC1	---- --11	---- --11	---- --uu
TKM016DL	0000 0000	0000 0000	uuuu uuuu
TKM016DH	0000 0000	0000 0000	uuuu uuuu
TKM0ROL	0000 0000	0000 0000	uuuu uuuu
TKM0ROH	---- --00	---- --00	---- --uu
TKM0C0	0000 0000	0000 0000	uuuu uuuu
TKM0C1	0-00 0000	0-00 0000	u-uu uuuu
TKM116DL	0000 0000	0000 0000	uuuu uuuu
TKM116DH	0000 0000	0000 0000	uuuu uuuu
TKM1ROL	0000 0000	0000 0000	uuuu uuuu
TKM1ROH	---- --00	---- --00	---- --uu
TKM1C0	0000 0000	0000 0000	uuuu uuuu
TKM1C1	0000 0000	0000 0000	uuuu uuuu
TKM216DL	0000 0000	0000 0000	uuuu uuuu
TKM216DH	0000 0000	0000 0000	uuuu uuuu
TKM2ROL	0000 0000	0000 0000	uuuu uuuu
TKM2ROH	---- --00	---- --00	---- --uu
TKM2C0	0000 0000	0000 0000	uuuu uuuu
TKM2C1	0000 0000	0000 0000	uuuu uuuu
EEC	---- 0000	---- 0000	---- uuuu

Note: "-" not implement

"u" stands for "unchanged"

"x" stands for "unknown"

BS83B16A-3/BS83B16A-4 Register

Register	LVR&power on	WDT Overflow (Normal Mode)	WDT Overflow (HALT Mode)
IAR0	---- ----	---- ----	---- ----
MP0	xxxx xxxx	xxxx xxxx	uuuu uuuu
IAR1	---- ----	---- ----	---- ----
MP1	xxxx xxxx	xxxx xxxx	uuuu uuuu
BP	---- ---0	---- ---0	---- ---u
ACC	xxxx xxxx	uuuu uuuu	uuuu uuuu
PCL	0000 0000	0000 0000	0000 0000
TBLP	xxxx xxxx	uuuu uuuu	uuuu uuuu
TBLH	xxxx xxxx	uuuu uuuu	uuuu uuuu
TBHP	---- xxxx	---- uuuu	---- uuuu
STATUS	--00 xxxx	--1u uuuu	--11 uuuu
SMOD	0000 0011	0000 0011	uuuu uuuu
CTRL	0-00 -x00	0-00 -x00	u-uu -uuu
INTEG	---- --00	---- --00	---- --uu
INTC0	-000 0000	-000 0000	-uuu uuuu
INTC1	-000 -000	-000 -000	-uuu -uuu
LVRC	0101 0101	0101 0101	uuuu uuuu
PA	1--1 1111	1--1 1111	u--u uuuu
PAC	1--1 1111	1--1 1111	u--u uuuu
PAPU	0--0 0000	0--0 0000	u--u uuuu
PAWU	0--0 0000	0--0 0000	u--u uuuu
WDTC	0101 0011	0101 0011	uuuu uuuu
TBC	--00 ----	--00 ----	--uu ----
TMR	0000 0000	0000 0000	uuuu uuuu
TMRC	--00 -000	--00 -000	--uu -uuu
EEA	--11 1111	--11 1111	--uu uuuu
EED	0000 0000	0000 0000	uuuu uuuu
PB	1111 1111	1111 1111	uuuu uuuu
PBC	1111 1111	1111 1111	uuuu uuuu
PBPU	0000 0000	0000 0000	uuuu uuuu
I2CTOC	0000 0000	0000 0000	uuuu uuuu
SIMC0	0000 -00-	0000 -00-	uuuu -uu-
SIMC1	0000 -000	0000 -000	uuuu -uuu
SIMD	0000 0000	0000 0000	uuuu uuuu
SIMC2	--11 1111	--11 1111	--uu uuuu
SIMA	0000 0000	0000 0000	uuuu uuuu
PC	1111 1111	1111 1111	uuuu uuuu
PCC	1111 1111	1111 1111	uuuu uuuu
PCPU	0000 0000	0000 0000	uuuu uuuu
TKTMR	0000 0000	0000 0000	uuuu uuuu
TKC0	-000 0000	-000 0000	-uuu uuuu
TK16DL	0000 0000	0000 0000	uuuu uuuu
TK16DH	0000 0000	0000 0000	uuuu uuuu
TKC1	---- --11	---- --11	---- --uu
TKM016DL	0000 0000	0000 0000	uuuu uuuu
TKM016DH	0000 0000	0000 0000	uuuu uuuu

Register	LVR&power on	WDT Overflow (Normal Mode)	WDT Overflow (HALT Mode)
TKM0ROL	0000 0000	0000 0000	uuuu uuuu
TKM0ROH	---- --00	---- --00	---- --uu
TKM0C0	0000 0000	0000 0000	uuuu uuuu
TKM0C1	0-00 0000	0-00 0000	u-uu uuuu
TKM116DL	0000 0000	0000 0000	uuuu uuuu
TKM116DH	0000 0000	0000 0000	uuuu uuuu
TKM1ROL	0000 0000	0000 0000	uuuu uuuu
TKM1ROH	---- --00	---- --00	---- --uu
TKM1C0	0000 0000	0000 0000	uuuu uuuu
TKM1C1	0000 0000	0000 0000	uuuu uuuu
TKM216DL	0000 0000	0000 0000	uuuu uuuu
TKM216DH	0000 0000	0000 0000	uuuu uuuu
TKM2ROL	0000 0000	0000 0000	uuuu uuuu
TKM2ROH	---- --00	---- --00	---- --uu
TKM2C0	0000 0000	0000 0000	uuuu uuuu
TKM2C1	0000 0000	0000 0000	uuuu uuuu
TKM316DL	0000 0000	0000 0000	uuuu uuuu
TKM316DH	0000 0000	0000 0000	uuuu uuuu
TKM3ROL	0000 0000	0000 0000	uuuu uuuu
TKM3ROH	---- --00	---- --00	---- --uu
TKM3C0	0000 0000	0000 0000	uuuu uuuu
TKM3C1	0000 0000	0000 0000	uuuu uuuu
EEC	---- 0000	---- 0000	---- uuuu

Note: "-" not implement

"u" stands for "unchanged"

"x" stands for "unknown"

Input/Output Ports

Holtek microcontrollers offer considerable flexibility on their I/O ports. With the input or output designation of every pin fully under user program control, pull-high selections for all ports and wake-up selections on certain pins, the user is provided with an I/O structure to meet the needs of a wide range of application possibilities.

The device provides bidirectional input/output lines labeled with port names PA~PC. These I/O ports are mapped to the RAM Data Memory with specific addresses as shown in the Special Purpose Data Memory table. All of these I/O ports can be used for input and output operations. For input operation, these ports are non-latching, which means the inputs must be ready at the T2 rising edge of instruction "MOV A, [m]", where m denotes the port address. For output operation, all the data is latched and remains unchanged until the output latch is rewritten.

I/O Register List

- **BS83B04A-4**

Register Name	Bit							
	7	6	5	4	3	2	1	0
PAWU	D7	D6	D5	D4	D3	D2	D1	D0
PAPU	D7	D6	D5	D4	D3	D2	D1	D0
PA	D7	D6	D5	D4	D3	D2	D1	D0
PAC	D7	D6	D5	D4	D3	D2	D1	D0

- **BS83B08A-3/BS83B08A-4**

Register Name	Bit							
	7	6	5	4	3	2	1	0
PAWU	D7	—	—	D4	D3	D2	D1	D0
PAPU	D7	—	—	D4	D3	D2	D1	D0
PA	D7	—	—	D4	D3	D2	D1	D0
PAC	D7	—	—	D4	D3	D2	D1	D0
PBPU	D7	D6	D5	D4	D3	D2	D1	D0
PB	D7	D6	D5	D4	D3	D2	D1	D0
PBC	D7	D6	D5	D4	D3	D2	D1	D0

- **BS83B12A-3/BS83B12A-4**

Register Name	Bit							
	7	6	5	4	3	2	1	0
PAWU	D7	—	—	D4	D3	D2	D1	D0
PAPU	D7	—	—	D4	D3	D2	D1	D0
PA	D7	—	—	D4	D3	D2	D1	D0
PAC	D7	—	—	D4	D3	D2	D1	D0
PBPU	D7	D6	D5	D4	D3	D2	D1	D0
PB	D7	D6	D5	D4	D3	D2	D1	D0
PBC	D7	D6	D5	D4	D3	D2	D1	D0
PCPU	—	—	—	—	D3	D2	D1	D0
PC	—	—	—	—	D3	D2	D1	D0
PCC	—	—	—	—	D3	D2	D1	D0

• **BS83B16A-3/BS83B16A-4**

Register Name	Bit							
	7	6	5	4	3	2	1	0
PAWU	D7	—	—	D4	D3	D2	D1	D0
PAPU	D7	—	—	D4	D3	D2	D1	D0
PA	D7	—	—	D4	D3	D2	D1	D0
PAC	D7	—	—	D4	D3	D2	D1	D0
PBPU	D7	D6	D5	D4	D3	D2	D1	D0
PB	D7	D6	D5	D4	D3	D2	D1	D0
PBC	D7	D6	D5	D4	D3	D2	D1	D0
PCPU	D7	D6	D5	D4	D3	D2	D1	D0
PC	D7	D6	D5	D4	D3	D2	D1	D0
PCC	D7	D6	D5	D4	D3	D2	D1	D0

Pull-high Resistors

Many product applications require pull-high resistors for their switch inputs usually requiring the use of an external resistor. To eliminate the need for these external resistors, all I/O pins, when configured as an input have the capability of being connected to an internal pull-high resistor. These pull-high resistors are selected using registers PAPU~PCPU, and are implemented using weak PMOS transistors.

PAPU Register – BS83B04A-4

Bit	7	6	5	4	3	2	1	0
Name	D7	D6	D5	D4	D3	D2	D1	D0
R/W	R/W	R/W	R/W	R/W	R/W	R/W	R/W	R/W
POR	0	0	0	0	0	0	0	0

Bit 7~0 I/O Port A bit 7~bit 0 Pull-High Control
0: Disable
1: Enable

PAPU Register – except BS83B04A-4

Bit	7	6	5	4	3	2	1	0
Name	D7	—	—	D4	D3	D2	D1	D0
R/W	R/W	—	—	R/W	R/W	R/W	R/W	R/W
POR	0	—	—	0	0	0	0	0

Bit 7 I/O Port A bit 7 Pull-High Control
0: Disable
1: Enable

Bit 6~5 Unimplemented, read as "0"

Bit 4~0 I/O Port A bit 4~bit 0 Pull-High Control
0: Disable
1: Enable

PBPU Register

Bit	7	6	5	4	3	2	1	0
Name	D7	D6	D5	D4	D3	D2	D1	D0
R/W	R/W	R/W	R/W	R/W	R/W	R/W	R/W	R/W
POR	0	0	0	0	0	0	0	0

Bit 7~0 I/O Port B bit 7~bit 0 Pull-High Control
0: Disable
1: Enable

PCPU Register – BS83B12A-3/BS83B12A-4

Bit	7	6	5	4	3	2	1	0
Name	—	—	—	—	D3	D2	D1	D0
R/W	—	—	—	—	R/W	R/W	R/W	R/W
POR	—	—	—	—	0	0	0	0

Bit 7~4 Unimplemented, read as "0"

Bit 3~0 I/O Port C bit 3~bit 0 Pull-High Control
0: Disable
1: Enable

PCPU Register – BS83B16A-3/BS83B16A-4

Bit	7	6	5	4	3	2	1	0
Name	D7	D6	D5	D4	D3	D2	D1	D0
R/W	R/W	R/W	R/W	R/W	R/W	R/W	R/W	R/W
POR	0	0	0	0	0	0	0	0

Bit 7~0 I/O Port C bit 7~bit 0 Pull-High Control
0: Disable
1: Enable

Port A Wake-up

The HALT instruction forces the microcontroller into the SLEEP or IDLE Mode which preserves power, a feature that is important for battery and other low-power applications. Various methods exist to wake-up the microcontroller, one of which is to change the logic condition on one of the Port A pins from high to low. This function is especially suitable for applications that can be woken up via external switches. Each pin on Port A can be selected individually to have this wake-up feature using the PAWU register.

PAWU Register – BS83B04A-4

Bit	7	6	5	4	3	2	1	0
Name	D7	D6	D5	D4	D3	D2	D1	D0
R/W	R/W	R/W	R/W	R/W	R/W	R/W	R/W	R/W
POR	0	0	0	0	0	0	0	0

Bit 7~0 I/O Port A bit 7~bit 0 Pull-High Control
0: Disable
1: Enable

PAWU Register – except BS83B04A-4

Bit	7	6	5	4	3	2	1	0
Name	D7	—	—	D4	D3	D2	D1	D0
R/W	R/W	—	—	R/W	R/W	R/W	R/W	R/W
POR	0	—	—	0	0	0	0	0

Bit 7 I/O Port A bit 7 Pull-High Control
0: Disable
1: Enable

Bit 6~5 Unimplemented, read as "0"

Bit 4~0 I/O Port A bit 4~bit 0 Wake Up Control
0: Disable
1: Enable

I/O Port Control Registers

Each I/O port has its own control register known as PAC~PCC, to control the input/output configuration. With this control register, each CMOS output or input can be reconfigured dynamically under software control. Each pin of the I/O ports is directly mapped to a bit in its associated port control register. For the I/O pin to function as an input, the corresponding bit of the control register must be written as a "1". This will then allow the logic state of the input pin to be directly read by instructions. When the corresponding bit of the control register is written as a "0", the I/O pin will be setup as a CMOS output. If the pin is currently setup as an output, instructions can still be used to read the output register. However, it should be noted that the program will in fact only read the status of the output data latch and not the actual logic status of the output pin.

PAC Register – BS83B04A-4

Bit	7	6	5	4	3	2	1	0
Name	D7	D6	D5	D4	D3	D2	D1	D0
R/W	R/W	R/W	R/W	R/W	R/W	R/W	R/W	R/W
POR	1	0	0	1	1	1	1	1

Bit 7 I/O Port A bit 7 Input/Output Control
0: Output
1: Input

PAC Register – except BS83B04A-4

Bit	7	6	5	4	3	2	1	0
Name	D7	—	—	D4	D3	D2	D1	D0
R/W	R/W	—	—	R/W	R/W	R/W	R/W	R/W
POR	1	—	—	1	1	1	1	1

Bit 7 I/O Port A bit 7 Input/Output Control
0: Output
1: Input

Bit 6~5 Unimplemented, read as "0"

Bit 4~0 I/O Port A bit 4~bit 0 Input/Output Control
0: Output
1: Input

PBC Register

Bit	7	6	5	4	3	2	1	0
Name	D7	D6	D5	D4	D3	D2	D1	D0
R/W	R/W	R/W	R/W	R/W	R/W	R/W	R/W	R/W
POR	1	1	1	1	1	1	1	1

Bit 7~0 I/O Port B bit 7~bit 0 Input/Output Control
0: Output
1: Input

PCC Register – BS83B12A-3/BS83B12A-4

Bit	7	6	5	4	3	2	1	0
Name	—	—	—	—	D3	D2	D1	D0
R/W	—	—	—	—	R/W	R/W	R/W	R/W
POR	—	—	—	—	1	1	1	1

Bit 7~4 Unimplemented, read as "0"

Bit 3~0 I/O Port C bit 3~bit 0 Input/Output Control
0: Output
1: Input

PCC Register – BS83B16A-3/BS83B16A-4

Bit	7	6	5	4	3	2	1	0
Name	D7	D6	D5	D4	D3	D2	D1	D0
R/W	R/W	R/W	R/W	R/W	R/W	R/W	R/W	R/W
POR	1	1	1	1	1	1	1	1

Bit 7~0 I/O Port C bit 7~bit 0 Input/Output Control
0: Output
1: Input

Pin-shared Functions

The flexibility of the microcontroller range is greatly enhanced by the use of pins that have more than one function. Limited numbers of pins can force serious design constraints on designers but by supplying pins with multi-functions, many of these difficulties can be overcome. For some pins, the chosen function of the multi-function I/O pins is set by application program control.

External Interrupt Input

The external interrupt pin, INT, is pin-shared with an I/O pin. To use the pin as an external interrupt input the correct bits in the INTC0 register must be programmed. The pin must also be set as an input by setting the corresponding bit in the SFS Register. A pull-high resistor can also be selected via the appropriate port pull-high resistor register. Note that even if the pin is set as an external interrupt input the I/O function still remains.

• **SFS Register – BS83B04A-4**

Bit	7	6	5	4	3	2	1	0
Name	—	—	—	—	—	—	—	SFS0
R/W	—	—	—	—	—	—	—	R/W
POR	—	—	—	—	—	—	—	0

Bit 7~1 Unimplemented, read as "0"

Bit 5 **SFS0:** INT source selection
0: PA0
1: PA6

I/O Pin Structures

The accompanying diagrams illustrate the internal structures of some generic I/O pin types. As the exact logical construction of the I/O pin will differ from these drawings, they are supplied as a guide only to assist with the functional understanding of the I/O pins. The wide range of pin-shared structures does not permit all types to be shown.

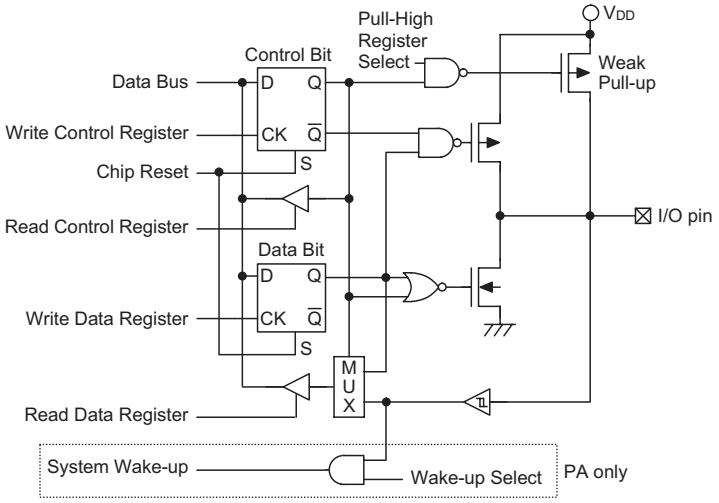

Generic Input/Output Structure

Programming Considerations

Within the user program, one of the first things to consider is port initialisation. After a reset, all of the I/O data and port control registers will be set high. This means that all I/O pins will default to an input state, the level of which depends on the other connected circuitry and whether pull-high selections have been chosen. If the port control registers, PAC~PCC, are then programmed to setup some pins as outputs, these output pins will have an initial high output value unless the associated port data registers, PA~PC, are first programmed. Selecting which pins are inputs and which are outputs can be achieved byte-wide by loading the correct values into the appropriate port control register or by programming individual bits in the port control register using the "SET [m].i" and "CLR [m].i" instructions. Note that when using these bit control instructions, a read-modify-write operation takes place. The microcontroller must first read in the data on the entire port, modify it to the required new bit values and then rewrite this data back to the output ports.

Port A has the additional capability of providing wake-up functions. When the device is in the SLEEP or IDLE Mode, various methods are available to wake the device up. One of these is a high to low transition of any of the Port A pins. Single or multiple pins on Port A can be setup to have this function.

Timer/Event Counter

The provision of timers form an important part of any microcontroller, giving the designer a means of carrying out time related functions. The devices contain one 8-bit. The provision of an internal prescaler to the clock circuitry on gives added range to the timer.

There are two types of registers related to the Timer/Event Counters. The first is the register that contains the actual value of the timer and into which an initial value can be preloaded. Reading from this register retrieves the contents of the Timer/Event Counter. The second type of associated register is the Timer Control Register which defines the timer options.

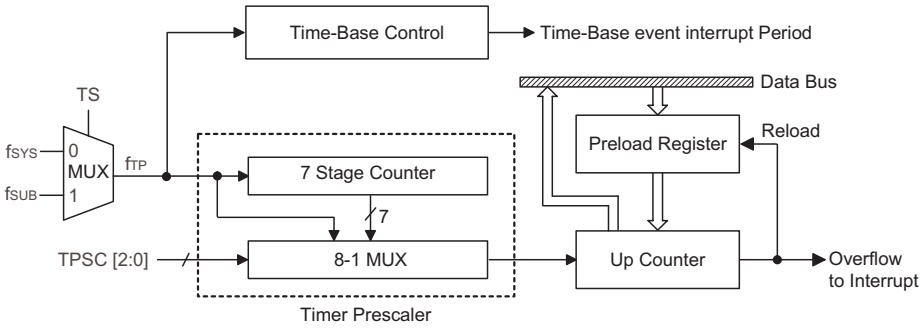

Timer/Event Counter

Configuring the Timer/Event Counter Input Clock Source

The Timer/Event Counter clock source can originate from either the system clock f_{SYS} or the f_{SUB} oscillator, the choice of which is determined by the TS bit in the TMRC register. This internal clock source is first divided by a prescaler, the division ratio of which is conditioned by the Timer Control Register bits TPSC0~TPSC2.

Timer Register – TMR

The timer register is a special function register located in the Special Purpose Data Memory and is the place where the actual timer value is stored, it is known as TMR. The value in the timer register increases by one each time an internal clock pulse is received The timer will count from the initial value loaded by the preload register to the full count of FFH at which point the timer overflows and an internal interrupt signal is generated. The timer value will then be reset with the initial preload register value and continue counting.

Note that to achieve a maximum full range count of FFH, the preload register must first be cleared to all zeros. It should be noted that after power-on, the preload registers will be in an unknown condition. Note that if the Timer/Event Counter is in an OFF condition and data is written to its preload register, this data will be immediately written into the actual counter. However, if the counter is enabled and counting, any new data written into the preload data register during this period will remain in the preload register and will only be written into the actual counter the next time an overflow occurs.

Timer Control Register – TMRC

The Timer Control Register is known as TMRC. It is the Timer Control Register together with the corresponding timer register that control the full operation of the Timer/Event Counter. Before the timer can be used, it is essential that the Timer Control Register is fully programmed with the right data to ensure its correct operation, a process that is normally carried out during program initialisation.

The timer-on bit, which is bit 4 of the Timer Control Register and known as TON, provides the basic on/off control of the timer. Setting the bit high allows the counter to run, clearing the bit stops the counter. Bits 0~2 of the Timer Control Register determine the division ratio of the input clock prescaler. The TS bit selects the internal clock source.

TMRC Register

Bit	7	6	5	4	3	2	1	0
Name	—	—	TS	TON	—	TPSC2	TPSC1	TPSC0
R/W	—	—	R/W	R/W	—	R/W	R/W	R/W
POR	—	—	0	0	—	0	0	0

Bit 7~6 Unimplemented, read as "0"

Bit 5 **TS:** Timer/Event Counter Clock Source
0: f_{SYS}
1: f_{SUB}

Bit 4 **TON:** Timer/Event Counter Counting Enable
0: Disable
1: Enable

Bit 3 Unimplemented, read as "0"

Bits 2~0 **TPSC2~TPSC0:** Timer prescaler rate selection
Timer internal clock=
000: f_{TP}
001: $f_{TP}/2$
010: $f_{TP}/4$
011: $f_{TP}/8$
100: $f_{TP}/16$
101: $f_{TP}/32$
110: $f_{TP}/64$
111: $f_{TP}/128$

Timer Operation

The Timer/Event Counter is utilised to measure fixed time intervals, providing an internal interrupt signal each time the Timer/Event Counter overflows. The timer input clock source is either f_{SYS} or f_{SUB}, however, this timer clock source is further divided by a prescaler, the value of which is determined by the bits TPSC2~TPSC0 in the Timer Control Register. The timer-on bit, TON must be set high to enable the timer to run. Each time an internal clock transition occurs, the timer increments by one; when the timer is full and overflows, an interrupt signal is generated and the timer will reload the value already loaded into the preload register and continue counting. A timer overflow condition and corresponding internal interrupt is one of the wake-up sources, however, the internal interrupts can be disabled by ensuring that the timer enable bit in the interrupt register is reset to zero.

Prescaler

Bits TPSC0~TPSC2 of the TMRC register can be used to define a division ratio for the internal clock source of the Timer/Event Counter enabling longer time out periods to be setup.

Programming Considerations

When the Timer/Event Counter is read, or if data is written to the preload register, the clock is inhibited to avoid errors, however as this may result in a counting error, this should be taken into account by the programmer. Care must be taken to ensure that the timer is properly initialised before using it for the first time. The associated timer enable bits in the interrupt control register must be properly set otherwise the internal interrupt associated with the timer will remain inactive. It is also important to ensure that an initial value is first loaded into the timer registers before the timer is switched on; this is because after power-on the initial values of the timer registers are unknown.

After the timer has been initialized the timer can be turned on and off by controlling the enable bit in the timer control register. When the Timer/Event Counter overflows, its corresponding interrupt request flag in the interrupt control register will be set. If the Timer/Event Counter interrupt is enabled this will in turn generate an interrupt signal. However irrespective of whether the interrupts are enabled or not, a Timer/Event Counter overflow will also generate a wake-up signal if the device is in a Power-down condition. To prevent such a wake-up from occurring, the timer interrupt request flag should first be set high before issuing the HALT instruction to enter the Idle/Sleep Mode.

Touch Key Function

Each device provides multiple touch key functions. The touch key function is fully integrated and requires no external components, allowing touch key functions to be implemented by the simple manipulation of internal registers.

Touch Key Structure

The touch keys are pin shared with the PA, PB and PC logic I/O pins, with the desired function chosen via register bits. Keys are organised into groups of four, with each group known as a module and having a module number, M0 to M3. Each module is a fully independent set of four Touch Keys and each Touch Key has its own oscillator. Each module contains its own control logic circuits and register set. Examination of the register names will reveal the module number it is referring to.

Device	Keys - n	Touch Key Module	Touch Key	Shared I/O Pin
BS83B04A-4	4	M0	K1~K4	PA5, PA1, PA3, PA4
BS83B08A-3/BS83B08A-4	8	M0	K1~K4	PB0~PB3
		M1	K5~K8	PB4~PB7
BS83B12A-3/BS83B12A-4	12	M0	K1~K4	PB0~PB3
		M1	K5~K8	PB4~PB7
		M2	K9~K12	PC0~PC3
BS83B16A-3/BS83B16A-4	16	M0	K1~K4	PB0~PB3
		M1	K5~K8	PB4~PB7
		M2	K9~K12	PC0~PC3
		M3	K13~K16	PC4~PC7

Touch Key Register Definition

Each touch key module, which contains four touch key functions, has its own suite registers. The following table shows the register set for each touch key module. The Mn within the register name refers to the Touch Key module number, BS83B04A-4 has a M0, BS83B08A-3/BS83B08A-4 has a range of M0 to M1, BS83B12A-3/BS83B12A-4 has a range of M0 to M2, BS83B16A-3/BS83B16A-4 has a range of M0 to M3.

Name	Usage
TKTMR	Touch Key 8-bit timer/counter register
TKC0	Counter on-off and clear control/reference clock control/Start bit
TK16DL	Touch key module 16-bit counter low byte contents
TK16DH	Touch key module 16-bit counter high byte contents
TKC1	Touch key OSC frequency select
TKMn16DL	Module n 16-bit counter low byte contents
TKMn16DH	Module n 16-bit counter high byte contents
TKMnROL	Reference OSC internal capacitor select
TKMnROH	Reference OSC internal capacitor select
TKMnC0	Control Register 0 Multiplexer Key Select
TKMnC1	Control Register 1 Key oscillator control/Reference oscillator control/Touch key or I/O select

Register Listing

Device	Register Name	Bit							
		7	6	5	4	3	2	1	0
BS83B04A-4	TKC0	—	TKRCOV	TKST	TKCFOV	TK16OV	—	TK16S1	TK16S0
	TKM0C1	M0TSS	—	M0ROEN	M0KOEN	M0K4IO	M0K3IO	M0K2IO	M0K1IO
Others	TKC0	—	TKRCOV	TKST	TKCFOV	TK16OV	TSCS	TK16S1	TK16S0
	TKMnC1	MnTSS	—	MnROEN	MnKOEN	MnK4IO	MnK3IO	MnK2IO	MnK1IO
All devices	TKTMR	D7	D6	D5	D4	D3	D2	D1	D0
	TK16DL	D7	D6	D5	D4	D3	D2	D1	D0
	TK16DH	D15	D14	D13	D12	D11	D10	D9	D8
	TKC1	—	—	—	—	—	—	TKFS1	TKFS0
	TKMn16DL	D7	D6	D5	D4	D3	D2	D1	D0
	TKMn16DH	D15	D14	D13	D12	D11	D10	D9	D8
	TKMnROL	D7	D6	D5	D4	D3	D2	D1	D0
	TKMnROH	—	—	—	—	—	—	D9	D8
	TKMnC0	MnMXS1	MnMXS0	MnDFEN	MnFILEN	MnSOFC	MnSOF2	MnSOF1	MnSOF0

Touch Key Module (n=0~3)

TKTMR Register

Bit	7	6	5	4	3	2	1	0
Name	D7	D6	D5	D4	D3	D2	D1	D0
R/W	R/W	R/W	R/W	R/W	R/W	R/W	R/W	R/W
POR	0	0	0	0	0	0	0	0

Bit 7~0 Touch Key 8-bit timer/counter register
Time slot counter overflow set-up time is (256-TKTMR[7:0]) × 32

TKC0 Register – BS83B04A-4

Bit	7	6	5	4	3	2	1	0
Name	—	TKRCOV	TKST	TKCFOV	TK16OV	—	TK16S1	TK16S0
R/W	—	R/W	R/W	R/W	R/W	—	R/W	R/W
POR	—	0	0	0	0	—	0	0

Bit 7 Unimplemented, read as "0"

Bit 6 **TKRCOV:** Time slot counter overflow flag
0: No overflow
1: Overflow
If module 0 or All module (select by TSCS bit) time slot counter is overflow, the Touch Key Interrupt request flag will be set (TKMF) and all module key OSC and ref OSC auto stop. All module 16-bit C/F counter, 16-bit counter, 5-bit time slot counter and 8-bit time slot timer counter will be automatically off.

Bit 5 **TKST:** Start Touch Key detection control bit
0: Stopped
0→1: Started
In all modules the16-bit C/F counter, 16-bit counter, 5-bit time slot counter will be automatically cleared when this bit is cleared to “0” (8-bit programmable time slot counter will not be cleared, which overflow time is setup by user). When this bit changes from low to high, the 16-bit C/F counter, 16-bit counter, 5-bit time slot counter and 8-bit time slot timer counter will be automatically on and enable key OSC and ref OSC output clock input these counters.

Bit 4 **TKCFOV:** Touch key module 16-bit C/F counter overflow flag
0: Not overflow
1: Overflow
This bit must be cleared by software.

Bit 3 **TK16OV:** Touch key module 16-bit counter overflow flag
0: Not overflow
1: Overflow
This bit must be cleared by software.

Bit 2 Unimplemented, read as "0"

Bit 1~0 **TK16S1~TK16S0:** The touch key module 16-bit counter clock source select
00: f_{SYS}
01: $f_{SYS}/2$
10: $f_{SYS}/4$
11: $f_{SYS}/8$

TKC0 Register – except BS83B04A-4

Bit	7	6	5	4	3	2	1	0
Name	—	TKRCOV	TKST	TKCFOV	TK16OV	TSCS	TK16S1	TK16S0
R/W	—	R/W	R/W	R/W	R/W	R/W	R/W	R/W
POR	—	0	0	0	0	0	0	0

Bit 7 Unimplemented, read as "0"

Bit 6 **TKRCOV:** Time slot counter overflow flag
0: No overflow
1: Overflow
If module 0 or All module (select by TSCS bit) time slot counter is overflow, the Touch Key Interrupt request flag will be set (TKMF) and all module key OSC and ref OSC auto stop. All module 16-bit C/F counter, 16-bit counter, 5-bit time slot counter and 8-bit time slot timer counter will be automatically off.

Bit 5 **TKST:** Start Touch Key detection control bit
0: Stopped
0→1: Started
In all modules the16-bit C/F counter, 16-bit counter, 5-bit time slot counter will be automatically cleared when this bit is cleared to “0” (8-bit programmable time slot counter will not be cleared, which overflow time is setup by user). When this bit changes from low to high, the 16-bit C/F counter, 16-bit counter, 5-bit time slot counter and 8-bit time slot timer counter will be automatically on and enable key OSC and ref OSC output clock input these counters.

Bit 4 **TKCFOV:** Touch key module 16-bit C/F counter overflow flag
0: Not overflow
1: Overflow
This bit must be cleared by software.

Bit 3 **TK16OV:** Touch key module 16-bit counter overflow flag
0: Not overflow
1: Overflow
This bit must be cleared by software.

Bit 2 **TSCS:** Touch Key time slot counter select
0: Each Module use own time slot counter.
1: All Touch Key Module use Module 0 time slot counter.

Bit 1~0 **TK16S1~TK16S0:** The touch key module 16-bit counter clock source select
00: f_{SYS}
01: $f_{SYS}/2$
10: $f_{SYS}/4$
11: $f_{SYS}/8$

TKC1 Register

Bit	7	6	5	4	3	2	1	0
Name	—	—	—	—	—	—	TKFS1	TKFS0
R/W	—	—	—	—	—	—	R/W	R/W
POR	—	—	—	—	—	—	1	1

Bit 7 ~2 Unimplemented, read as "0"

Bit 1~0 **TKFS1~TKFS0:** Touch key OSC frequency select
00: 500kHz
01: 1000kHz
10: 1500kHz
11: 2000kHz

TK16DL Register

Bit	7	6	5	4	3	2	1	0
Name	D7	D6	D5	D4	D3	D2	D1	D0
R/W	R	R	R	R	R	R	R	R
POR	0	0	0	0	0	0	0	0

Bit 7~0 Touch key module 16-bit counter low byte contents

TK16DH Register

Bit	7	6	5	4	3	2	1	0
Name	D7	D6	D5	D4	D3	D2	D1	D0
R/W	R	R	R	R	R	R	R	R
POR	0	0	0	0	0	0	0	0

Bit 7~0 Touch key module 16-bit counter high byte contents

TKMn16DL Register

Bit	7	6	5	4	3	2	1	0
Name	D7	D6	D5	D4	D3	D2	D1	D0
R/W	R	R	R	R	R	R	R	R
POR	0	0	0	0	0	0	0	0

Bit 7~0 Module n 16-bit counter low byte contents

TKMn16DH Register

Bit	7	6	5	4	3	2	1	0
Name	D7	D6	D5	D4	D3	D2	D1	D0
R/W	R	R	R	R	R	R	R	R
POR	0	0	0	0	0	0	0	0

Bit 7~0 Module n 16-bit counter high byte contents

TKMnROL Register

Bit	7	6	5	4	3	2	1	0
Name	D7	D6	D5	D4	D3	D2	D1	D0
R/W	R/W	R/W	R/W	R/W	R/W	R/W	R/W	R/W
POR	0	0	0	0	0	0	0	0

Bit 7~0 Reference OSC inernal capacitor select
OSC inernal capacitor select : (TKMnRO[9:0] × 50pF)/1024

TKMnROH Register

Bit	7	6	5	4	3	2	1	0
Name	—	—	—	—	—	—	D9	D8
R/W	—	—	—	—	—	—	R/W	R/W
POR	—	—	—	—	—	—	0	0

Bit 7 ~2 Unimplemented, read as "0"

Bit 1~0 Reference OSC inernal capacitor select
OSC inernal capacitor select : (TKMnRO[9:0] × 50pF)/1024

TKMnC0 Register

Bit	7	6	5	4	3	2	1	0
Name	MnMXS1	MnMXS0	MnDFEN	MnFILEN	MnSOFC	MnSOF2	MnSOF1	MnSOF0
R/W	R/W	R/W	R/W	R/W	R/W	R/W	R/W	R/W
POR	0	0	0	0	0	0	0	0

Bit 7 ~6 **MnMXS1~MnMXS0:** Multiplexer Key Select

Bit 5 **MnDFEN:** Multi-frequency control
0: Disable
1: Enable

Bit 4 **MnFILEN:** Filter function control
0: Disable
1: Enable

Bit3 **MnSOFC:** C to F OSC frequency hopping function control
0: The frequency hopping function is controlled by MnSOF2~ MnSOF0 bits
1: The frequency hopping function is controlled by hardware regardless of what is the state of MnSOF2~ MnSOF0 bits

Bit 2~0 **MnSOF2~ MnSOF0:** Selecting key OSC and ref OSC frequency as C to F OSC is controlled by software
000: 1380kHz
001: 1500kHz
010: 1670kHz
011: 1830kHz
100: 2000kHz
101: 2230kHz
110: 2460kHz
111: 2740kHz

The frequency which is mentioned here willl be changed when the external or internal capacitor is with different value. if the touch key operates at a frequency of 2MHz, users can adjust the frequency in scale when select other frequency.

TKM0C1 Register – BS83B04A-4

Bit	7	6	5	4	3	2	1	0
Name	M0TSS	—	M0ROEN	M0KOEN	M0K4IO	M0K3IO	M0K2IO	M0K1IO
R/W	R/W	—	R/W	R/W	R/W	R/W	R/W	R/W
POR	0	—	0	0	0	0	0	0

Bit 7 **M0TSS:** Timer slot counter clock select
0: Ref oscillator
1: $f_{SYS}/4$

Bit 6 Unimplemented, read as "0"

Bit 5 **M0ROEN:** Reference OSC control
0: Disable
1: Enable

Bit 4 **M0KOEN:** Key OSC control
0: Disable
1: Enable

Bit 3~0 **M0K4IO~M0K1IO:** I/O pin or touch key function select

M0K4IO	M0
	PA4/Key4
0	I/O
1	Touch key

M0K3IO	M0
	PA3/Key3
0	I/O
1	Touch key

M0K2IO	M0
	PA1/Key2
0	I/O
1	Touch key

M0K1IO	M0
	PA5/Key1
0	I/O
1	Touch key

TKMnC1 Register – except BS83B04A-4

Bit	7	6	5	4	3	2	1	0
Name	MnTSS	—	MnROEN	MnKOEN	MnK4IO	MnK3IO	MnK2IO	MnK1IO
R/W	R/W	—	R/W	R/W	R/W	R/W	R/W	R/W
POR	0	—	0	0	0	0	0	0

Bit 7 **MnTSS:** Timer slot counter clock select
0: Ref oscillator
1: $f_{SYS}/4$

Bit 6 Unimplemented, read as "0"

Bit 5 **MnROEN:** Reference OSC control
0: Disable
1: Enable

Bit 4 **MnKOEN:** Key OSC control
0: Disable
1: Enable

Bit 3~0 **MnK4IO~MnK1IO:** I/O pin or touch key function select

MnK4IO	M0	M1	M2	M3
	PB3/Key4	PB7/Key8	PC3/Key12	PC7/Key16
0	I/O			
1	Touch key			

MnK3IO	M0	M1	M2	M3
	PB2/Key3	PB6/Key7	PC2/Key11	PC6/Key15
0	I/O			
1	Touch key			

MnK2IO	M0	M1	M2	M3
	PB1/Key2	PB5/Key6	PC1/Key10	PC5/Key14
0	I/O			
1	Touch key			

MnK1IO	M0	M1	M2	M3
	PB0/Key1	PB4/Key5	PC0/Key9	PC4/Key13
0	I/O			
1	Touch key			

Touch Key Operation

When a finger touches or is in proximity to a touch pad, the capacitance of the pad will increase. By using this capacitance variation to change slightly the frequency of the internal sense oscillator, touch actions can be sensed by measuring these frequency changes. Using an internal programmable divider the reference clock is used to generate a fixed time period. By counting a number of generated clock cycles from the sense oscillator during this fixed time period touch key actions can be determined.

During this reference clock fixed interval, the number of clock cycles generated by the sense oscillator is measured, and it is this value that is used to determine if a touch action has been made or not.These devices contain four touch key inputs which are shared with logical I/O pins, with the desired function selected using register bits.

Using the TSCS bit in the TKC0 register can select the module 0 time slot counter as the time slot counter for all modules. All modules use the same started signal. The16-bit C/F counter, 16-bit counter, 5-bit time slot counter in all modules will be automatically cleared when this bit is cleared to "0", but the 8-bit programmable time slot counter will not be cleared. The overflow time is setup by user. When this bit changes from low to high, the 16-bit C/F counter, 16-bit counter, 5-bit time slot counter and 8-bit time slot timer counter will be automatically switched on.

The key oscillator and reference oscillator in all modules will be automatically stopped and the 16-bit C/F counter, 16-bit counter, 5-bit time slot counter and 8-bit time slot timer counter will be automatically switched off when the 5-bit time slot counter overflows. The clock source for the time slot counter and 8+5 bit counter, is sourced from the reference oscillator or $f_{SYS}/4$. The reference oscillator and key oscillator will be enabled by setting the MnROEN bit and MnKOEN bits in the TKMnC1 register .

When the time slot counter in all the touch key modules or in the touch key module 0 overflows, an actual touch key interrupt will take place. The touch keys mentioned here are the keys which are enabled.

Each touch key module, which consists of four touch keys, Key 1~Key 4 is contained in module 0, Key 5~Key 8 is contained in module 1, Key 9~Key 12 is contained in module 2 and Key 13~Key 16 is contained in the module 3. Each touch key module has an identical structure.

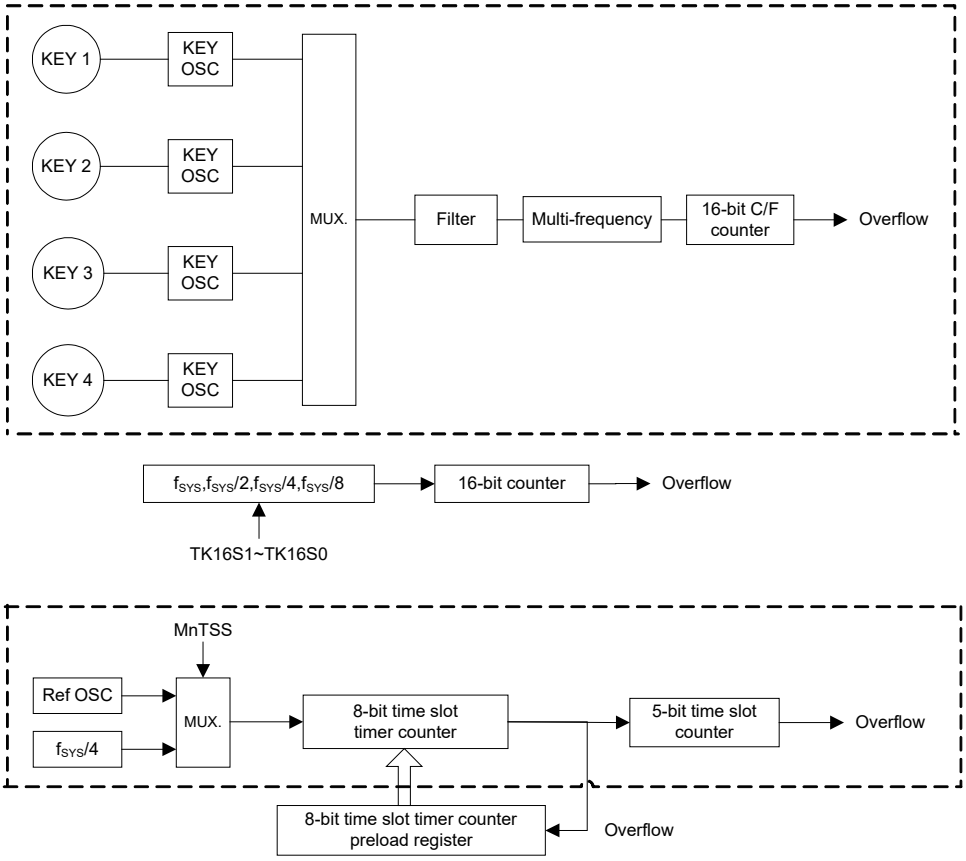

Note: Each touch key module contains the content in the dash line.

Touch Switch Module Block Diagram

The touch key sense oscilltor and reference oscillator timing diagram is shown in the following figure:

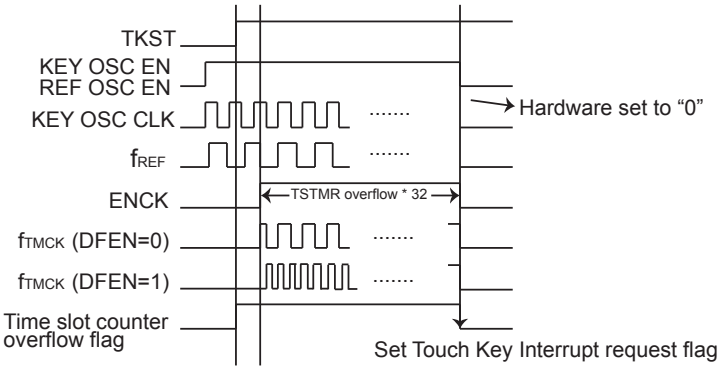

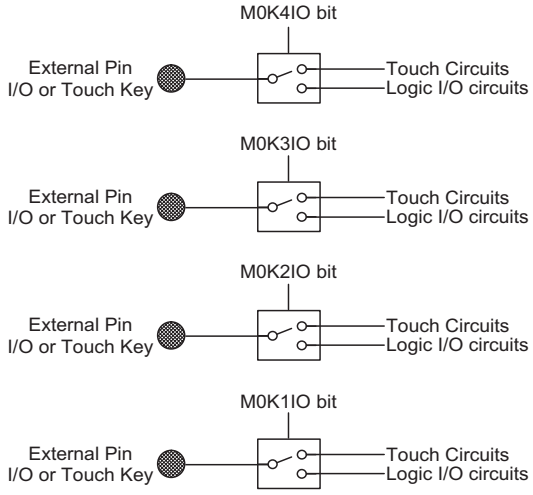

Touch Key or I/O Function Select

Touch Key Interrupt

The touch key only has single interrupt, when the time slot counter in all the touch key modules or in the touch key module 0 overflows, an actual touch key interrupt will take place. The16-bit C/F counter, 16-bit counter, 5-bit time slot counter and 8-bit time slot counter in all modules will be automatically cleared.

The TKCFOV flag, which is the 16-bit C/F counter overflow flag will go high when any of the Touch Key Module 16-bit C/F counter overflows. As this flag will not be automatically cleared, it has to be cleared by the application program.

Module 0 only contains one 16-bit counter. The TK16OV flag, which is the 16-bit counter overflow flag will go high when the 16-bit counter overflows. As this flag will not be automatically cleared, it has to be cleared by the application program. More details regarding the touch key interrupt is located in the interrupt section of the datasheet.

Programming Considerations

After the relevant registers are setup, the touch key detection process is initiated the changing the TKST bit from low to high. This will enable and synchronise all relevant oscillators. The TKRCOV flag, which is the time slot counter flag will go high and remain high until the counter overflows. When this happens an interrupt signal will be generated.

When the external touch key size and layout are defined, their related capacitances will then determine the sensor oscillator frequency.

Serial Interface Module – SIM

These devices except BS83B04A-4 contain a Serial Interface Module, which include both the four line SPI interface and the two line I^2C interface types while BS83B04A-4 only contains the I^2C interface, to allow an easy method of communication with external peripheral hardware. Having relatively simple communication protocols, these serial interface types allow the microcontroller to interface to external SPI or I^2C based hardware such as sensors, Flash memory or EEPROM memory, etc. The SIM interface pins are pin-shared with other I/O pins and must be selected using the SIMEN bit in the SIMC0 register. As both interface types share the same pins and registers, the choice of whether the SPI or I^2C type is used is made using the SIM operating mode control bits, named SIM2~SIM0, in the SIMC0 register.

SPI Interface

The SPI interface is often used to communicate with external peripheral devices such as sensors, Flash or EEPROM memory devices etc. Originally developed by Motorola, the four line SPI interface is a synchronous serial data interface that has a relatively simple communication protocol simplifying the programming requirements when communicating with external hardware devices.

The communication is full duplex and operates as a slave/master type, where the device can be either master or slave. Although the SPI interface specification can control multiple slave devices from a single master, but this device provided only one $\overline{SCS}$ pin. If the master needs to control multiple slave devices from a single master, the master can use I/O pin to select the slave devices.

SPI Interface Operation

The SPI interface is a full duplex synchronous serial data link. It is a four line interface with pin names SDI, SDO, SCK and $\overline{SCS}$. Pins SDI and SDO are the Serial Data Input and Serial Data Output lines, SCK is the Serial Clock line and $\overline{SCS}$ is the Slave Select line. As the SPI interface pins are pin-shared with normal I/O pins and with the I^2C function pins, the SPI interface must first be enabled by setting the correct bits in the SIMC0 and SIMC2 registers. Communication between devices connected to the SPI interface is carried out in a slave/master mode with all data transfer initiations being implemented by the master. The Master also controls the clock signal. As the device only contains a single $\overline{SCS}$ pin only one slave device can be utilized. The $\overline{SCS}$ pin is controlled by software, set CSEN bit to "1" to enable $\overline{SCS}$ pin function, set CSEN bit to "0" the $\overline{SCS}$ pin will be as I/O function.

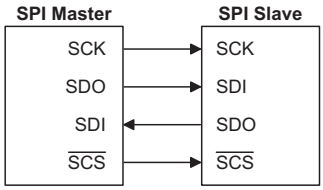

SPI Master/Slave Connection

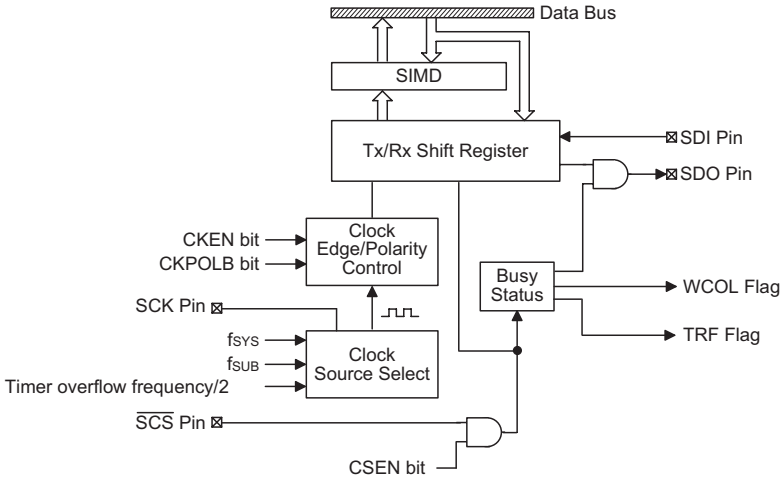

SPI Block Diagram

The SPI function in this device offers the following features:

- Full duplex synchronous data transfer
- Both Master and Slave modes
- LSB first or MSB first data transmission modes
- Transmission complete flag
- Rising or falling active clock edge

The status of the SPI interface pins is determined by a number of factors such as whether the device is in the master or slave mode and upon the condition of certain control bits such as CSEN and SIMEN.

SPI Registers

There are three internal registers which control the overall operation of the SPI interface. These are the SIMD data register and two registers SIMC0 and SIMC2. Note that the SIMC1 register is only used by the I^2C interface.

Register Name	Bit							
	7	6	5	4	3	2	1	0
SIMC0	SIM2	SIM1	SIM0	—	—	—	SIMEN	—
SIMD	D7	D6	D5	D4	D3	D2	D1	D0
SIMC2	—	—	CKPOLB	CKEG	MLS	CSEN	WCOL	TRF

SIM Registers List

The SIMD register is used to store the data being transmitted and received. The same register is used by both the SPI and I^2C functions. Before the device writes data to the SPI bus, the actual data to be transmitted must be placed in the SIMD register. After the data is received from the SPI bus, the device can read it from the SIMD register. Any transmission or reception of data from the SPI bus must be made via the SIMD register.

• **SIMD Register**

Bit	7	6	5	4	3	2	1	0
Name	D7	D6	D5	D4	D3	D2	D1	D0
R/W	R/W	R/W	R/W	R/W	R/W	R/W	R/W	R/W
POR	x	x	x	x	x	x	x	x

"x" unknown

There are also two control registers for the SPI interface, SIMC0 and SIMC2. Note that the SIMC2 register also has the name SIMA which is used by the I²C function. The SIMC1 register is not used by the SPI function, only by the I²C function. Register SIMC0 is used to control the enable/disable function and to set the data transmission clock frequency. Although not connected with the SPI function, the SIMC0 register is also used to control the Peripheral Clock Prescaler. Register SIMC2 is used for other control functions such as LSB/MSB selection, write collision flag etc.

• **SIMC0 Register**

Bit	7	6	5	4	3	2	1	0
Name	SIM2	SIM1	SIM0	—	—	—	SIMEN	—
R/W	R/W	R/W	R/W	—	—	—	R/W	—
POR	1	1	1	—	—	—	0	—

Bit 7~5 **SIM2~SIM0:** SIM Operating Mode Control
000: SPI master mode; SPI clock is $f_{SYS}/4$
001: SPI master mode; SPI clock is $f_{SYS}/16$
010: SPI master mode; SPI clock is $f_{SYS}/64$
011: SPI master mode; SPI clock is f_{SUB}
100: SPI master mode; SPI clock is TMR frequency/2
101: SPI slave mode
110: I²C slave mode
111: Unused mode

These bits setup the overall operating mode of the SIM function. As well as selecting if the I²C or SPI function, they are used to control the SPI Master/Slave selection and the SPI Master clock frequency. The SPI clock is a function of the system clock but can also be chosen to be sourced from the Timer/Event counter. If the SPI Slave Mode is selected then the clock will be supplied by an external Master device.

Bit 4~2 Unimplemented, read as "0"

Bit 1 **SIMEN:** SIM Control
0: Disable
1: Enable

The bit is the overall on/off control for the SIM interface. When the SIMEN bit is cleared to zero to disable the SIM interface, the SDI, SDO, SCK and $\overline{SCS}$, or SDA and SCL lines will be as I/O function and the SIM operating current will be reduced to a minimum value. If the SIM is configured to operate as an SPI interface via the SIM2~SIM0 bits, the contents of the SPI control registers will remain at the previous settings when the SIMEN bit changes from low to high and should therefore be first initialised by the application program. If the SIM is configured to operate as an I²C interface via the SIM2~SIM0 bits and the SIMEN bit changes from low tohigh, the contents of the I²C control bits such as HTX and TXAK will remain at the previous settings and should therefore be first initialised by the application program while the relevant I²C flags such as HCF, HAAS, HBB, SRW and RXAK will be set to their default states.

Bit 0 Unimplemented, read as "0"

• **SIMC2 Register**

Bit	7	6	5	4	3	2	1	0
Name	—	—	CKPOLB	CKEG	MLS	CSEN	WCOL	TRF
R/W	—	—	R/W	R/W	R/W	R/W	R/W	R/W
POR	—	—	0	0	0	0	0	0

Bit 7~6 Unimplemented, read as "0"

Bit 5 **CKPOLB:** Determines the base condition of the clock line
0: The SCK line will be high when the clock is inactive
1: The SCK line will be low when the clock is inactive
The CKPOLB bit determines the base condition of the clock line, if the bit is high, then the SCK line will be low when the clock is inactive. When the CKPOLB bit is low, then the SCK line will be high when the clock is inactive.

Bit 4 **CKEG:** Determines SPI SCK active clock edge type
CKPOLB=0
0: SCK is high base level and data capture at SCK rising edge
1: SCK is high base level and data capture at SCK falling edge
CKPOLB=1
0: SCK is low base level and data capture at SCK falling edge
1: SCK is low base level and data capture at SCK rising edge
The CKEG and CKPOLB bits are used to setup the way that the clock signal outputs and inputs data on the SPI bus. These two bits must be configured before data transfer is executed otherwise an erroneous clock edge may be generated. The CKPOLB bit determines the base condition of the clock line, if the bit is high, then the SCK line will be low when the clock is inactive. When the CKPOLB bit is low, then the SCK line will be high when the clock is inactive.

Bit 3 **MLS:** SPI Data shift order
This is the data shift select bit and is used to select how the data is transferred, either MSB or LSB first. Setting the bit high will select MSB first and low for LSB first.

Bit 2 **CSEN:** SPI $\overline{\text{SCS}}$ pin Control
0: Disable
1: Enable
The CSEN bit is used as an enable/disable for the $\overline{\text{SCS}}$ pin. If this bit is low, then the $\overline{\text{SCS}}$ pin will be disabled and placed into a floating condition. If the bit is high the $\overline{\text{SCS}}$ pin will be enabled and used as a select pin.

Bit 1 **WCOL:** SPI Write Collision flag
0: No collision
1: Collision
The WCOL flag is used to detect if a data collision has occurred. If this bit is high it means that data has been attempted to be written to the SIMD register during a data transfer operation. This writing operation will be ignored if data is being transferred. The bit can be cleared by the application program.

Bit 0 **TRF:** SPI Transmit/Receive Complete flag
0: Data is being transferred
1: SPI data transmission is completed
The TRF bit is the Transmit/Receive Complete flag and is set “1” automatically when an SPI data transmission is completed, but must set to “0” by the application program. It can be used to generate an interrupt.

SPI Communication

After the SPI interface is enabled by setting the SIMEN bit high, then in the Master Mode, when data is written to the SIMD register, transmission/reception will begin simultaneously. When the data transfer is complete, the TRF flag will be set automatically, but must be cleared using the application program. In the Slave Mode, when the clock signal from the master has been received, any data in the SIMD register will be transmitted and any data on the SDI pin will be shifted into the SIMD register. The master should output an $\overline{SCS}$ signal to enable the slave device before a clock signal is provided. The slave data to be transferred should be well prepared at the appropriate moment relative to the $\overline{SCS}$ signal depending upon the configurations of the CKPOLB bit and CKEG bit. The accompanying timing diagram shows the relationship between the slave data and $\overline{SCS}$ signal for various configurations of the CKPOLB and CKEG bits.

The SPI will continue to function even in the IDLE Mode.

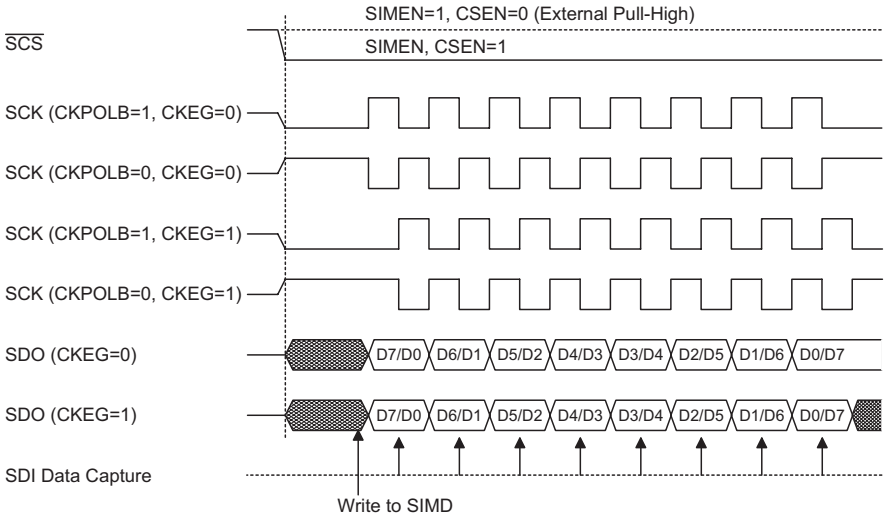

SPI Master Mode Timing

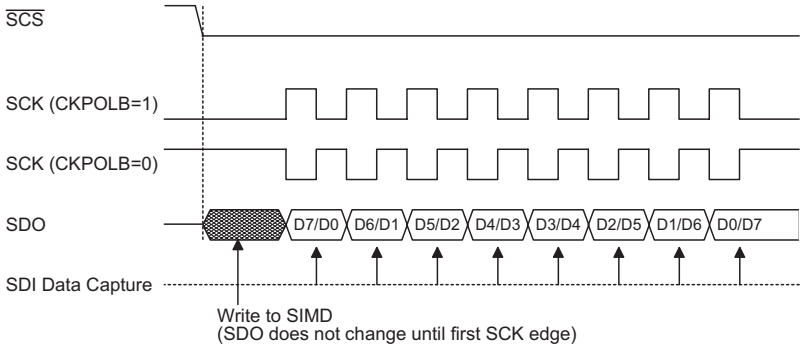

SPI Slave Mode Timing – CKEG=0

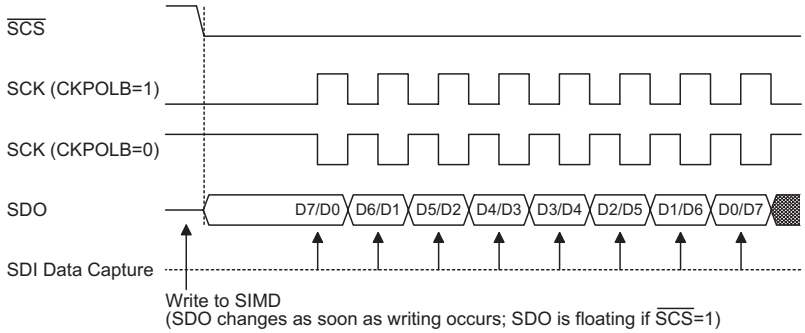

Note: For SPI slave mode, if SIMEN=1 and CSEN=0, SPI is always enabled and ignores the $\overline{SCS}$ level.

SPI Slave Mode Timing – CKEG=1

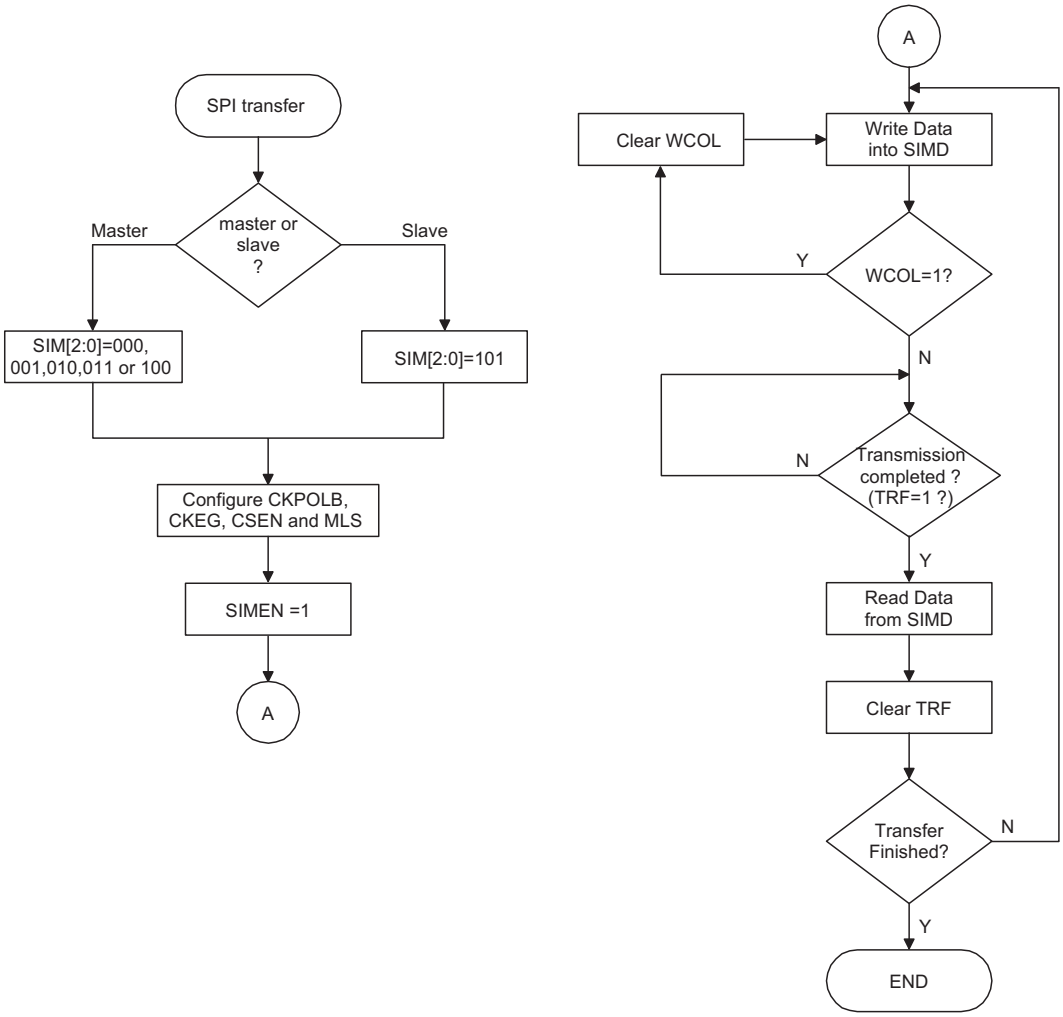

SPI Transfer Control Flowchart

I²C Interface

The I²C interface is used to communicate with external peripheral devices such as sensors, EEPROM memory etc. Originally developed by Philips, it is a two line low speed serial interface for synchronous serial data transfer. The advantage of only two lines for communication, relatively simple communication protocol and the ability to accommodate multiple devices on the same bus has made it an extremely popular interface type for many applications.

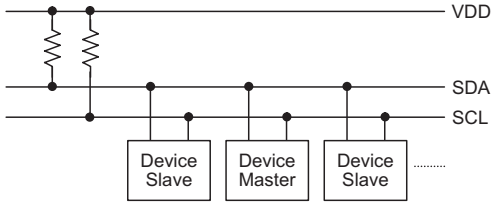

I²C Master/Slave Bus Connection

I²C Interface Operation

The I²C serial interface is a two line interface, a serial data line, SDA, and serial clock line, SCL. As many devices may be connected together on the same bus, their outputs are both open drain types. For this reason it is necessary that external pull-high resistors are connected to these outputs. Note that no chip select line exists, as each device on the I²C bus is identified by a unique address which will be transmitted and received on the I²C bus.

When two devices communicate with each other on the bidirectional I²C bus, one is known as the master device and one as the slave device. Both master and slave can transmit and receive data, however, it is the master device that has overall control of the bus. For this device, which only operates in slave mode, there are two methods of transferring data on the I²C bus, the slave transmit mode and the slave receive mode.

The debounce time of the I²C interface uses the system clock to in effect add a debounce time to the external clock to reduce the possibility of glitches on the clock line causing erroneous operation. The debounce time is 2 system clocks for the devices except BS83B04A-4, while the debounce time is selected via the IICC0 register for the BS83B04A-4. To achieve the required I²C data transfer speed, there exists a relationship between the system clock, f_{SYS}, and the I²C debounce time. For either the I²C Standard or Fast mode operation, users must take care of the selected system clock frequency and the configured debounce time to match the criterion shown in the following table.

I²C Debounce Time Selection	I²C Standard Mode (100kHz)	I²C Fast Mode (400kHz)
2 system clock debounce	f_{SYS} > 4MHz	f_{SYS} > 10MHz

I²C Minimum f_{SYS} Frequency (except BS83B04A-4)

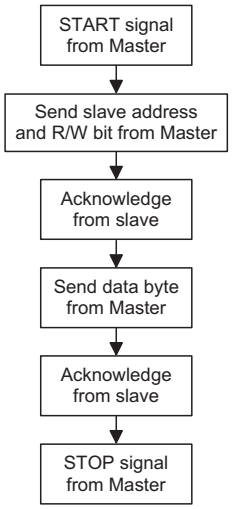

I²C Registers (except BS83B04A-4)

There are four control registers associated with the I²C bus, SIMC0, SIMC1, SIMA and I2CTOC and one data register, SIMD. The SIMD register, which is shown in the above SPI section, is used to store the data being transmitted and received on the I²C bus. Before the microcontroller writes data to the I²C bus, the actual data to be transmitted must be placed in the SIMD register. After the data is received from the I²C bus, the microcontroller can read it from the SIMD register. Any transmission or reception of data from the I²C bus must be made via the SIMD register. The SIM pins are pin shared with other I/O pins and must be selected using the SIMEN bit in the SIMC0 register.

Note that the SIMA register also has the name SIMC2 which is used by the SPI function. Bit SIMEN and bits SIM2~SIM0 in register SIMC0 are used by the I²C interface.

Register Name	Bit							
	7	6	5	4	3	2	1	0
SIMC0	SIM2	SIM1	SIM0	—	—	—	SIMEN	—
SIMC1	HCF	HAAS	HBB	HTX	TXAK	SRW	RNIC	RXAK
SIMD	D7	D6	D5	D4	D3	D2	D1	D0
SIMA	A6	A5	A4	A3	A2	A1	A0	—
I2CTOC	I2CTOEN	I2CTOF	I2CTOS5	I2CTOS4	I2CTOS3	I2CTOS2	I2CTOS1	I2CTOS0

I²C Registers List

• **SIMC0 Register**

Bit	7	6	5	4	3	2	1	0
Name	SIM2	SIM1	SIM0	—	—	—	SIMEN	—
R/W	R/W	R/W	R/W	—	—	—	R/W	—
POR	1	1	1	—	—	—	0	—

Bit 7~5 **SIM2~SIM0:** SIM Operating Mode Control
000: SPI master mode; SPI clock is $f_{SYS}/4$
001: SPI master mode; SPI clock is $f_{SYS}/16$
010: SPI master mode; SPI clock is $f_{SYS}/64$
011: SPI master mode; SPI clock is f_{SUB}
100: SPI master mode; SPI clock is TMR frequency/2
101: SPI slave mode
110: I^2C slave mode
111: Unused mode

These bits setup the overall operating mode of the SIM function. As well as selecting if the I^2C or SPI function, they are used to control the SPI Master/Slave selection and the SPI Master clock frequency. The SPI clock is a function of the system clock but can also be chosen to be sourced from the TM0. If the SPI Slave Mode is selected then the clock will be supplied by an external Master device.

Bit 4~2 Unimplemented, read as "0"

Bit 1 **SIMEN:** SIM Control
0: Disable
1: Enable

The bit is the overall on/off control for the SIM interface. When the SIMEN bit is cleared to zero to disable the SIM interface, the SDI, SDO, SCK and $\overline{SCS}$, or SDA and SCL lines will be as I/O function and the SIM operating current will be reduced to a minimum value. If the SIM is configured to operate as an SPI interface via the SIM2~SIM0 bits, the contents of the SPI control registers will remain at the previous settings when the SIMEN bit changes from low to high and should therefore be first initialised by the application program. If the SIM is configured to operate as an I^2C interface via the SIM2~SIM0 bits and the SIMEN bit changes from low tohigh, the contents of the I^2C control bits such as HTX and TXAK will remain at the previous settings and should therefore be first initialised by the application program while the relevant I^2C flags such as HCF, HAAS, HBB, SRW and RXAK will be set to their default states.

Bit 0 Unimplemented, read as "0"

• **SIMC1 Register**

Bit	7	6	5	4	3	2	1	0
Name	HCF	HAAS	HBB	HTX	TXAK	SRW	RNIC	RXAK
R/W	R	R	R	R/W	R/W	R	R/W	R
POR	1	0	0	0	0	0	0	1

Bit 7 **HCF:** I^2C Bus data transfer completion flag
0: Data is being transferred
1: Completion of an 8-bit data transfer
The HCF flag is the data transfer flag. This flag will be zero when data is being transferred. Upon completion of an 8-bit data transfer the flag will go high and an interrupt will be generated.

Bit 6 **HAAS:** I^2C Bus address match flag
0: Not address match
1: Address match
The HASS flag is the address match flag. This flag is used to determine if the slave device address is the same as the master transmit address. If the addresses match then this bit will be high, if there is no match then the flag will be low.

Bit 5 **HBB:** I^2C Bus busy flag
0: I^2C Bus is not busy
1: I^2C Bus is busy
The HBB flag is the I^2C busy flag. This flag will be "1" when the I^2C bus is busy which will occur when a START signal is detected. The flag will be set to "0" when the bus is free which will occur when a STOP signal is detected.

Bit 4 **HTX:** Select I^2C slave device is transmitter or receiver
0: Slave device is the receiver
1: Slave device is the transmitter

Bit 3 **TXAK:** I^2C Bus transmit acknowledge flag
0: Slave send acknowledge flag
1: Slave do not send acknowledge flag
The TXAK bit is the transmit acknowledge flag. After the slave device receipt of 8-bits of data, this bit will be transmitted to the bus on the 9th clock from the slave device. The slave device must always set TXAK bit to "0" before further data is received.

Bit 2 **SRW:** I^2C Slave Read/Write flag
0: Slave device should be in receive mode
1: Slave device should be in transmit mode
The SRW flag is the I^2C Slave Read/Write flag. This flag determines whether the master device wishes to transmit or receive data from the I^2C bus. When the transmitted address and slave address is match, that is when the HAAS flag is set high, the slave device will check the SRW flag to determine whether it should be in transmit mode or receive mode. If the SRW flag is high, the master is requesting to read data from the bus, so the slave device should be in transmit mode. When the SRW flag is zero, the master will write data to the bus, therefore the slave device should be in receive mode to read this data.

Bit 1 **RNIC:** I^2C running using Internal Clock Control
0: I^2C running using internal clock
1: I^2C running not using Internal Clock
The I^2C module can run without using internal clock, and generate an interrupt if the SIM interrupt is enabled, which can be used in SLEEP Mode, IDLE Mode, NORMAL(SLOW) Mode.If this bit is set to "1" and MCU is in "HALT", slave-receiver can work well but slave-transmitter doesn't work since it needs system clock .

Bit 0 **RXAK:** I²C Bus Receive acknowledge flag
0: Slave receive acknowledge flag
1: Slave do not receive acknowledge flag
The RXAK flag is the receiver acknowledge flag. When the RXAK flag is "0", it means that a acknowledge signal has been received at the 9th clock, after 8 bits of data have been transmitted. When the slave device in the transmit mode, the slave device checks the RXAK flag to determine if the master receiver wishes to receive the next byte. The slave transmitter will therefore continue sending out data until the RXAK flag is "1". When this occurs, the slave transmitter will release the SDA line to allow the master to send a STOP signal to release the I²C Bus.

• I2CTOC Register

Bit	7	6	5	4	3	2	1	0
Name	I2CTOEN	I2CTOF	I2CTOS5	I2CTOS4	I2CTOS3	I2CTOS2	I2CTOS1	I2CTOS0
R/W	R/W	R/W	R/W	R/W	R/W	R/W	R/W	R/W
POR	0	0	0	0	0	0	0	0

Bit 7 **I2CTOEN:** I²C Time-out Countrol
0: Disable
1: Enable

Bit 6 **HAAS:** Time-out flag
0: No time-out
1: Time-out occurred

Bit 5~0 **I2CTOS5~I2CTOS0:** Time-out Definition
I²C time-out clock source is $f_{SUB}/32$
I²C time-out time is given by: ([I2CTOS5 : I2CTOS0]+1) × $(32/f_{SUB})$

• SIMA Register

Bit	7	6	5	4	3	2	1	0
Name	A6	A5	A4	A3	A2	A1	A0	—
R/W	R/W	R/W	R/W	R/W	R/W	R/W	R/W	—
POR	x	x	x	x	x	x	x	—

"x" unknown

Bit 7~1 **A6~A0:** I²C slave address
A6~A0 is the I²C slave address bit 6~bit 0.
The SIMA register is also used by the SPI interface but has the name SIMC2. The SIMA register is the location where the 7-bit slave address of the slave device is stored. Bits 7~1 of the SIMA register define the device slave address. Bit 0 is not defined.
When a master device, which is connected to the I²C bus, sends out an address, which matches the slave address in the SIMA register, the slave device will be selected. Note that the SIMA register is the same register address as SIMC2 which is used by the SPI interface.

Bit 0 Unimplemented, read as "0"

I²C Registers – BS83B04A-4

There are four control registers associated with the I²C bus, IICC0, IICC1, IICA and I2CTOC and one data register, IICD. The IICD register is used to store the data being transmitted and received on the I²C bus. Before the microcontroller writes data to the I²C bus, the actual data to be transmitted must be placed in the IICD register. After the data is received from the I²C bus, the microcontroller can read it from the IICD register. Any transmission or reception of data from the I²C bus must be made via the IICD register.

Register Name	Bit							
	7	6	5	4	3	2	1	0
IICC0	—	—	—	—	IICDEB1	IICDEB0	IICEN	—
IICC1	HCF	HAAS	HBB	HTX	TXAK	SRW	IAMWU	RXAK
IICD	D7	D6	D5	D4	D3	D2	D1	D0
IICA	A6	A5	A4	A3	A2	A1	A0	—
I2CTOC	I2CTOEN	I2CTOF	I2CTOS5	I2CTOS4	I2CTOS3	I2CTOS2	I2CTOS1	I2CTOS0

I²C Registers List

• IICC0 Register

Bit	7	6	5	4	3	2	1	0
Name	—	—	—	—	IICDEB1	IICDEB0	IICEN	—
R/W	—	—	—	—	R/W	R/W	R/W	—
FOR	—	—	—	—	0	0	0	—

Bit 7~4 Unimplemented, read as "0"

Bit 3~2 **IICDEB1~ IICDEB0:** I²C Debounce Time Selection
00: No debounce
01: 2 system clock debounce
10: 4 system clock debounce
11: 4 system clock debounce

Bit 1 **IICEN:** I²C enable control
0: Disable
1: Enable

Bit 0 Unimplemented, read as "0".

• IICC1 Register

Bit	7	6	5	4	3	2	1	0
Name	HCF	HAAS	HBB	HTX	TXAK	SRW	IAMWU	RXAK
R/W	R	R	R	R/W	R/W	R	R/W	R
FOR	1	0	0	0	0	0	0	1

Bit 7~2 The same as the bit 7~bit 2 of the SIMC1 register.

Bit 1 **IAMWU:** I²C Address Match Wake-up Control
0: Disable
1: Enable – must be cleared by the application program after wake-up.
This bit should be set to "1" to enable the I²C address match wake up from the SLEEP or IDLE Mode. If the IAMWU bit has been set before entering either the SLEEP or IDLE mode to enable the I²C address match wake up, then this bit must be cleared by application program after wake-up to ensure correction device operation.

Bit 0 The same as the bit 0 of the SIMC1 register.

• IICD Register

Bit	7	6	5	4	3	2	1	0
Name	D7	D6	D5	D4	D3	D2	D1	D0
R/W	R/W	R/W	R/W	R/W	R/W	R/W	R/W	R/W
FOR	x	x	x	x	x	x	x	x

"x" unknown

Bit 7~0 The same as the bit 7~bit 0 of the SIMD register.

• **IICA Register**

Bit	7	6	5	4	3	2	1	0
Name	A6	A5	A4	A3	A2	A1	A0	—
R/W	R/W	R/W	R/W	R/W	R/W	R/W	R/W	—
FOR	0	0	0	0	0	0	0	—

Bit 7~0 The same as the bit 7~bit 0 of the SIMA register.

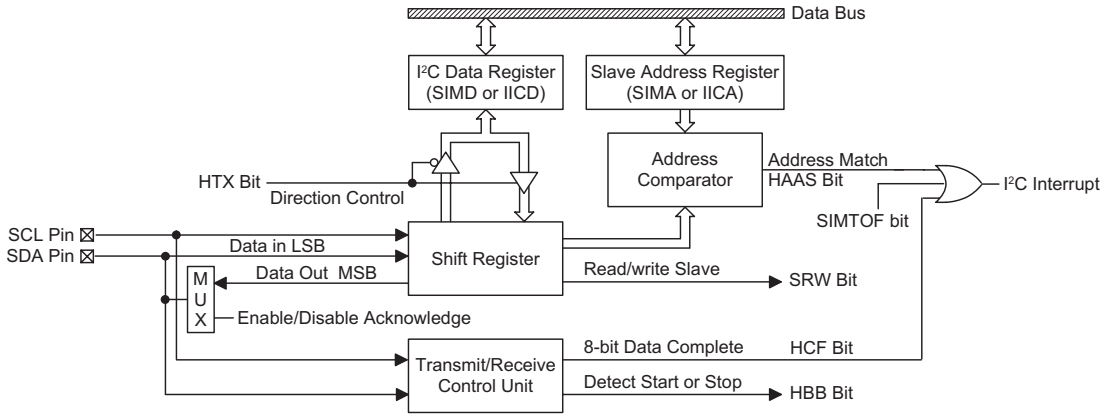

I²C Block Diagram

I²C Bus Communication

Communication on the I²C bus requires four separate steps, a START signal, a slave device address transmission, a data transmission and finally a STOP signal. When a START signal is placed on the I²C bus, all devices on the bus will receive this signal and be notified of the imminent arrival of data on the bus. The first seven bits of the data will be the slave address with the first bit being the MSB. If the address of the slave device matches that of the transmitted address, the HAAS bit in the SIMC1 or IICC1 register will be set and an I²C interrupt will be generated. After entering the interrupt service routine, the slave device must first check the condition of the HAAS bit to determine whether the interrupt source originates from an address match or from the completion of an 8-bit data transfer. During a data transfer, note that after the 7-bit slave address has been transmitted, the following bit, which is the 8th bit, is the read/write bit whose value will be placed in the SRW bit. This bit will be checked by the slave device to determine whether to go into transmit or receive mode. Before any transfer of data to or from the I²C bus, the microcontroller must initialise the bus, the following are steps to achieve this:

- Step 1
  Set the SIM2~SIM0 and SIMEN bits in the SIMC0 register to “1” for the devices except BS83B04A-4 or set the IICEN bit in the IICC0 register to "1" for the BS83B04A-4 to enable the I²C bus.
- Step 2
  Write the slave address of the device to the I²C bus address register SIMA or IICA.
- Step 3
  Set the SIME or I2CE interrupt enable bit of the interrupt control register to enable the SIM interrupt .

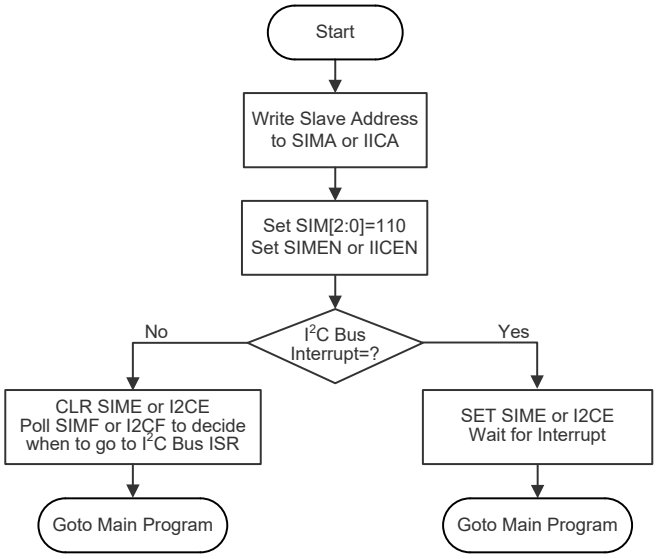

I²C Bus Initialisation Flow Chart

I²C Bus Start Signal

The START signal can only be generated by the master device connected to the I²C bus and not by the slave device. This START signal will be detected by all devices connected to the I²C bus. When detected, this indicates that the I²C bus is busy and therefore the HBB bit will be set. A START condition occurs when a high to low transition on the SDA line takes place when the SCL line remains high.

Slave Address

The transmission of a START signal by the master will be detected by all devices on the I²C bus. To determine which slave device the master wishes to communicate with, the address of the slave device will be sent out immediately following the START signal. All slave devices, after receiving this 7-bit address data, will compare it with their own 7-bit slave address. If the address sent out by the master matches the internal address of the microcontroller slave device, then an internal I²C bus interrupt signal will be generated. The next bit following the address, which is the 8th bit, defines the read/write status and will be saved to the SRW bit of the SIMC1 or IICC1 register. The slave device will then transmit an acknowledge bit, which is a low level, as the 9th bit. The slave device will also set the status flag HAAS when the addresses match.

As an I²C bus interrupt can come from two sources, when the program enters the interrupt subroutine, the HAAS bit should be examined to see whether the interrupt source has come from a matching slave address or from the completion of a data byte transfer. When a slave address is matched, the device must be placed in either the transmit mode and then write data to the SIMD or IICD register, or in the receive mode where it must implement a dummy read from the SIMD or IICC1 register to release the SCL line.

I²C Bus Read/Write Signal

The SRW bit in the SIMC1 or IICC1 register defines whether the slave device wishes to read data from the I²C bus or write data to the I²C bus. The slave device should examine this bit to determine if it is to be a transmitter or a receiver. If the SRW flag is "1" then this indicates that the master device wishes to read data from the I²C bus, therefore the slave device must be setup to send data to the I²C bus as a transmitter. If the SRW flag is "0" then this indicates that the master wishes to send data to the I²C bus, therefore the slave device must be setup to read data from the I²C bus as a receiver.

I²C Bus Slave Address Acknowledge Signal

After the master has transmitted a calling address, any slave device on the I²C bus, whose own internal address matches the calling address, must generate an acknowledge signal. The acknowledge signal will inform the master that a slave device has accepted its calling address. If no acknowledge signal is received by the master then a STOP signal must be transmitted by the master to end the communication. When the HAAS flag is high, the addresses have matched and the slave device must check the SRW flag to determine if it is to be a transmitter or a receiver. If the SRW flag is high, the slave device should be setup to be a transmitter so the HTX bit in the SIMC1 or IICC1 register should be set to "1". If the SRW flag is low, then the microcontroller slave device should be setup as a receiver and the HTX bit in the SIMC1 or IICC1 register should be set to "0".

I²C Bus Data and Acknowledge Signal

The transmitted data is 8-bits wide and is transmitted after the slave device has acknowledged receipt of its slave address. The order of serial bit transmission is the MSB first and the LSB last. After receipt of 8-bits of data, the receiver must transmit an acknowledge signal, level "0", before it can receive the next data byte. If the slave transmitter does not receive an acknowledge bit signal from the master receiver, then the slave transmitter will release the SDA line to allow the master to send a STOP signal to release the I²C Bus. The corresponding data will be stored in the SIMD or IICD register. If setup as a transmitter, the slave device must first write the data to be transmitted into the SIMD or IICD register. If setup as a receiver, the slave device must read the transmitted data from the SIMD or IICD register.

When the slave receiver receives the data byte, it must generate an acknowledge bit, known as TXAK, on the 9th clock. The slave device, which is setup as a transmitter will check the RXAK bit in the SIMC1 or IICC1 register to determine if it is to send another data byte, if not then it will release the SDA line and await the receipt of a STOP signal from the master.

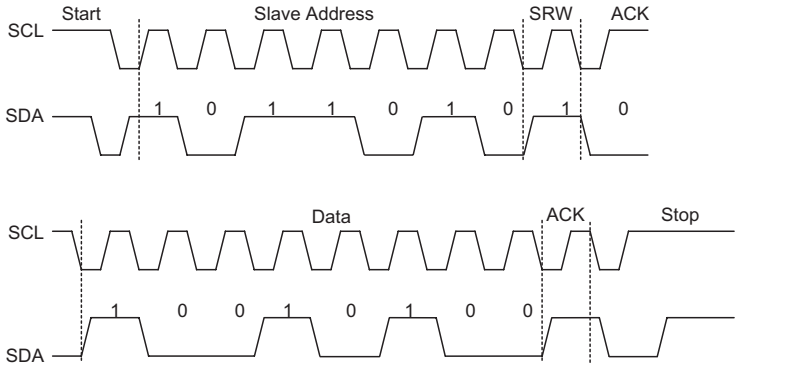

S=Start (1 bit)
SA=Slave Address (7 bits)
SR=SRW bit (1 bit)
M=Slave device send acknowledge bit (1 bit)
D=Data (8 bits)
A=ACK (RXAK bit for transmitter, TXAK bit for receiver 1 bit)
P=Stop (1 bit)

S	SA	SR	M	D	A	D	A	--------	S	SA	SR	M	D	A	D	A	--------	P

I²C Communication Timing Diagram

Note: *When a slave address is matched, the device must be placed in either the transmit mode and then write data to the SIMD or IICD register, or in the receive mode where it must implement a dummy read from the SIMD or IICD register to release the SCL line.

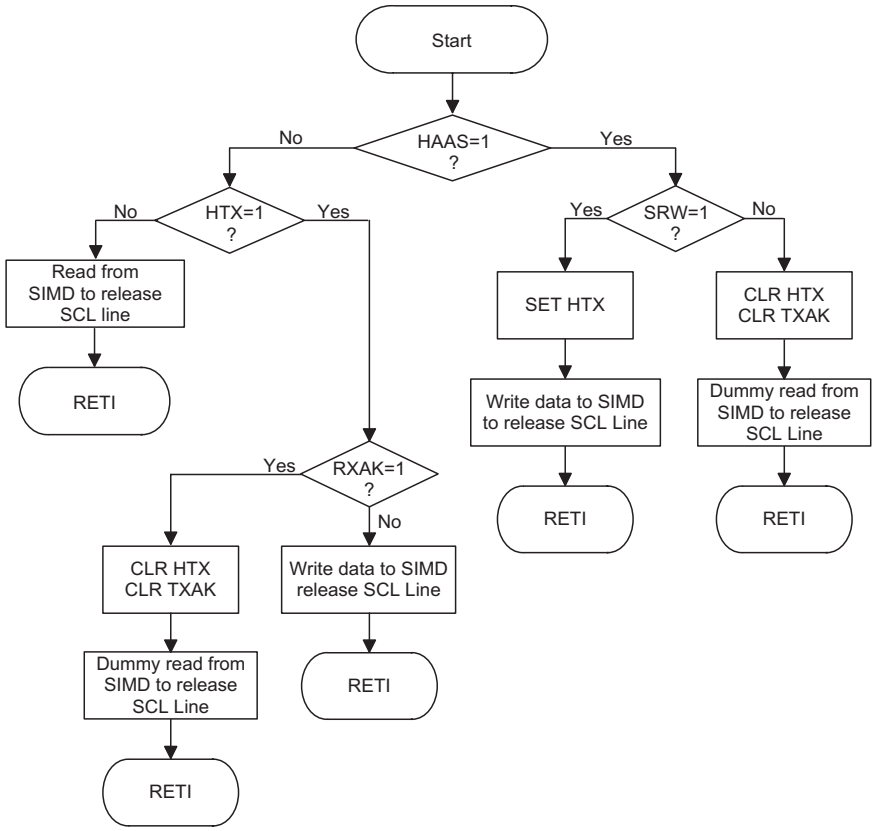

I²C Bus ISR Flow Chart

I²C Time-out Control

In order to reduce the problem of I²C lockup due to reception of erroneous clock sources, clock, a time-out function is provided. If the clock source to the I²C is not received then after a fixed time period, the I²C circuitry and registers will be reset.

The time-out counter starts counting on an I²C bus "START" and "address match" condition, and is cleared by an SCL falling edge. Before the next SCL falling edge arrives, if the time elapsed is greater than the time-out setup by the I2CTOC register, then a time-out condition will occur. The time-out function will stop when an I²C "STOP" condition occurs.

When an I²C time-out counter overflow occurs, the counter will stop and the I2CTOEN bit will be cleared to zero and the I2CTOF bit will be set high to indicate that a time-out condition as occurred. The time-out condition will also generate an interrupt which uses the I²C interrrupt vector. When an I²C time-out occurs, the I²C internal circuitry will be reset and the registers will be reset into the following condition:

Device	Register	After I²C Time-out
BS83B04A-4	IICD, IICA, IICC0	No change
	IICC1	Reset to POR condition
Others	SIMD, SIMA, SIMC0	No change
	SIMC1	Reset to POR condition

I²C Registers After Time-out

The I2CTOF flag can be cleared by the application program. There are 64 time-out periods which can be selected using bits in the I2CTOC register. The time-out time is given by the formula:

$$((1\sim64) \times 32)/f_{SUB}$$

This gives a range of about 1ms to 64ms. Note also that the LIRC oscillator is continuously enabled.

Interrupts

Interrupts are an important part of any microcontroller system. When an external event or an internal function such as a Touch Action or Timer/Event Counter overflow requires microcontroller attention, their corresponding interrupt will enforce a temporary suspension of the main program allowing the microcontroller to direct attention to their respective needs. The devices contain several external interrupt and internal interrupts functions. The external interrupt is generated by the action of the external INT pin, while the internal interrupts are generated by various internal functions such as the Touch Keys, Timer/Event Counter, Time Base, SIM etc.

Interrupt Registers

Overall interrupt control, which basically means the setting of request flags when certain microcontroller conditions occur and the setting of interrupt enable bits by the application program, is controlled by a series of registers, located in the Special Purpose Data Memory, as shown in the accompanying table. The number of registers depends upon the device chosen but fall into three categories. The first is the INTC0~INTC1 registers which setup the primary interrupts, the second is the INTEG registers to setup the external interrupt trigger edge type.

Each register contains a number of enable bits to enable or disable individual registers as well as interrupt flags to indicate the presence of an interrupt request. The naming convention of these follows a specific pattern. First is listed an abbreviated interrupt type, then the (optional) number of that interrupt followed by either an “E” for enable/disable bit or “F” for request flag.

Function	Enable Bit	Request Flag	Notes
Global	EMI	—	—
INT Pin	INTE	INTF	—
Touch Key Module	TKME	TKMF	—
SIM (except BS83B04A-4)	SIME	SIMF	—
I²C (BS33B04A-4)	I2CE	I2CF	—
EEPROM	DEE	DEF	—
Time Base	TBE	TBF	—
Timer/Event Counter	TE	TF	—

Interrupt Register Bit Naming Conventions

Device	Register Name	Bit							
		7	6	5	4	3	2	1	0
BS83B04A-4	INTC1	—	DEF	TBF	I2CF	—	DEE	TBE	I2CE
Others	INTC1	—	DEF	TBF	SIMF	—	DEE	TBE	SIME
All devices	INTEG	—	—	—	—	—	—	INTS1	INTS0
	INTC0	—	TF	TKMF	INTF	TE	TKME	INTE	EMI

Interrupt Register List

INTEG Register

Bit	7	6	5	4	3	2	1	0
Name	—	—	—	—	—	—	INTS1	INTS0
R/W	—	—	—	—	—	—	R/W	R/W
POR	—	—	—	—	—	—	0	0

Bit 7~2 Unimplemented, read as "0"

Bit 1~0 **INTS1, INTS0:** Defines INT interrupt active edge
00: Disabled interrupt
01: Rising Edge interrupt
10: Falling Edge interrupt
11: Dual Edge interrupt

INTC0 Register

Bit	7	6	5	4	3	2	1	0
Name	—	TF	TKMF	INTF	TE	TKME	INTE	EMI
R/W	—	R/W	R/W	R/W	R/W	R/W	R/W	R/W
POR	—	0	0	0	0	0	0	0

Bit 7 Unimplemented, read as "0"

Bit 6 **TF:** Timer/Event Counter interrupt request flag
0: No request
1: Interrupt request

Bit 5 **TKMF:** Touch key module interrupt request flag
0: No request
1: Interrupt request

Bit 4 **INTF:** INT pin interrupt request flag
0: No request
1: Interrupt request

Bit 3 **TE:** Timer/Event Counter interrupt control
0: Disable
1: Enable

Bit 2 **TKME:** Touch key module interrupt control
0: Disable
1: Enable

Bit 1 **INTE:** INT pin interrupt control
0: Disable
1: Enable

Bit 0 **EMI:** Global Interrupt control
0: Disable
1: Enable

INTC1 Register – BS83B04A-4

Bit	7	6	5	4	3	2	1	0
Name	—	DEF	TBF	I2CF	—	DEE	TBE	I2CE
R/W	—	R/W	R/W	R/W	R/W	R/W	R/W	R/W
POR	—	0	0	0	0	0	0	0

Bit 7 Unimplemented, read as "0"

Bit 6 **DEF:** Data EEPROM interrupt request flag
0: No request
1: Interrupt request

Bit 5 **TBF:** Time Base interrupt request flag
0: No request
1: Interrupt request

Bit 4 **I2CF:** I^2C interrupt request flag
0: No request
1: Interrupt request

Bit 3 Unimplemented, read as "0"

Bit 2 **DEE:** Data EEPROM control
0: Disable
1: Enable

Bit 1 **TBE:** Time Base interrupt control
0: Disable
1: Enable

Bit 0 **I2CE:** I^2C interrupt control
0: Disable
1: Enable

INTC1 Register – except BS83B04A-4

Bit	7	6	5	4	3	2	1	0
Name	—	DEF	TBF	SIMF	—	DEE	TBE	SIME
R/W	—	R/W	R/W	R/W	—	R/W	R/W	R/W
POR	—	0	0	0	—	0	0	0

Bit 7 Unimplemented, read as "0"

Bit 6 **DEF:** Data EEPROM interrupt request flag
0: No request
1: Interrupt request

Bit 5 **TBF:** Time Base interrupt request flag
0: No request
1: Interrupt request

Bit 4 **SIMF:**SIM interrupt request flag
0: No request
1: Interrupt request

Bit 3 Unimplemented, read as "0"

Bit 2 **DEE:** Data EEPROM control
0: Disable
1: Enable

Bit 1 **TBE:** Time Base interrupt control
0: Disable
1: Enable

Bit 0 **SIME:** SIM interrupt control
0: Disable
1: Enable

Interrupt Operation

When the conditions for an interrupt event occur, such as a Touch Key Counter overflow, Timer/Event Counter overflow, etc, the relevant interrupt request flag will be set. Whether the request flag actually generates a program jump to the relevant interrupt vector is determined by the condition of the interrupt enable bit. If the enable bit is set high then the program will jump to its relevant vector; if the enable bit is zero then although the interrupt request flag is set an actual interrupt will not be generated and the program will not jump to the relevant interrupt vector. The global interrupt enable bit, if cleared to zero, will disable all interrupts.

When an interrupt is generated, the Program Counter, which stores the address of the next instruction to be executed, will be transferred onto the stack. The Program Counter will then be loaded with a new address which will be the value of the corresponding interrupt vector. The microcontroller will then fetch its next instruction from this interrupt vector. The instruction at this vector will usually be a “JMP” which will jump to another section of program which is known as the interrupt service routine. Here is located the code to control the appropriate interrupt. The interrupt service routine must be terminated with a “RETI”, which retrieves the original Program Counter address from the stack and allows the microcontroller to continue with normal execution at the point where the interrupt occurred.

The various interrupt enable bits, together with their associated request flags, are shown in the accompanying diagrams with their order of priority. Some interrupt sources have their own individual vector while others share the same multi-function interrupt vector. Once an interrupt subroutine is serviced, all the other interrupts will be blocked, as the global interrupt enable bit, EMI bit will be cleared automatically. This will prevent any further interrupt nesting from occurring. However, if other interrupt requests occur during this interval, although the interrupt will not be immediately serviced, the request flag will still be recorded.

If an interrupt requires immediate servicing while the program is already in another interrupt service routine, the EMI bit should be set after entering the routine, to allow interrupt nesting. If the stack is full, the interrupt request will not be acknowledged, even if the related interrupt is enabled, until the Stack Pointer is decremented. If immediate service is desired, the stack must be prevented from becoming full. In case of simultaneous requests, the accompanying diagram shows the priority that is applied. All of the interrupt request flags when set will wake-up the device if it is in SLEEP or IDLE Mode, however to prevent a wake-up from occurring the corresponding flag should be set before the device is in SLEEP or IDLE Mode.

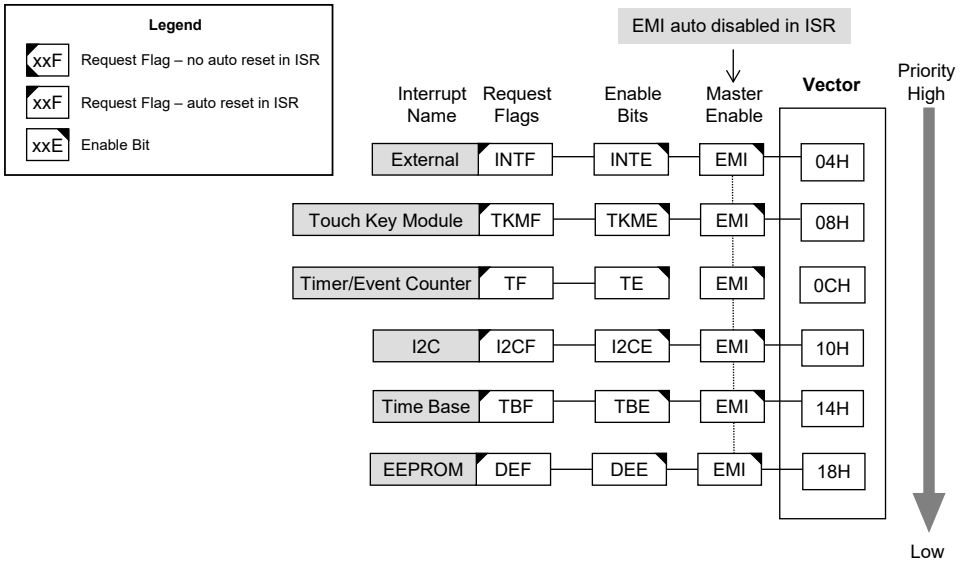

Interrupt Structure(BS83B04A-4)

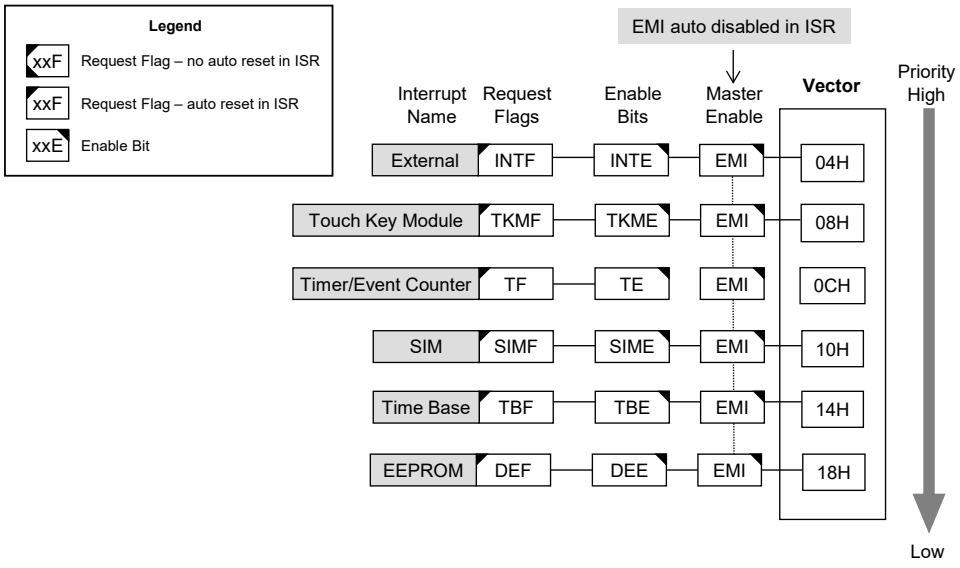

Interrupt Structure(except BS83B04A-4)

External Interrupt

The external interrupt is controlled by signal transitions on the pin INT. An external interrupt request will take place when the external interrupt request flag, INTF, is set, which will occur when a transition, whose type is chosen by the edge select bits, appears on the external interrupt pin. To allow the program to branch to its respective interrupt vector address, the global interrupt enable bit, EMI, and respective external interrupt enable bit, INTE, must first be set. Additionally the correct interrupt edge type must be selected using the INTEG register to enable the external interrupt function and to choose the trigger edge type. As the external interrupt pin is pin-shared with I/O pin, its can only be configured as external interrupt pin if its external interrupt enable bit in the corresponding interrupt register has been set. The pin must also be setup as an input by setting the corresponding bit in the port control register. When the interrupt is enabled, the stack is not full and the correct transition type appears on the external interrupt pin, a subroutine call to the external interrupt vector, will take place. When the interrupt is serviced, the external interrupt request flag, INTF, will be automatically reset and the EMI bit will be automatically cleared to disable other interrupts. Note that any pull-high resistor selections on the external interrupt pin will remain valid even if the pin is used as an external interrupt input.

The INTEG register is used to select the type of active edge that will trigger the external interrupt. A choice of either rising or falling or both edge types can be chosen to trigger an external interrupt. Note that the INTEG register can also be used to disable the external interrupt function.

Time Base Interrupt

The function of the Time Base Interrupt is to provide regular time signal in the form of an internal interrupt. It is controlled by the overflow signal from its timer function. When this happens its interrupt request flags TBF will be set. To allow the program to branch to its interrupt vector address, the global interrupt enable bit, EMI and Time Base enable bit, TBE, must first be set. When the interrupt is enabled, the stack is not full and the Time Base overflows, a subroutine call to its vector location will take place. When the interrupt is serviced, the interrupt request flag, TBF, will be automatically reset and the EMI bit will be cleared to disable other interrupts.

The purpose of the Time Base Interrupt is to provide an interrupt signal at fixed time periods. Its clock source originate from the internal clock source f_{SYS} or f_{SUB}. This f_{TP} input clock passes through a divider, the division ratio of which is selected by programming the appropriate bits in the TBC register to obtain longer interrupt periods whose value ranges. The clock source that generates f_{TP}, which in turn controls the Time Base interrupt period, can originate from several different sources, as shown in the System Operating Mode section.

TBC Register

Bit	7	6	5	4	3	2	1	0
Name	—	—	TB1	TB0	—	—	—	—
R/W	—	—	R/W	R/W	—	—	—	—
POR	—	—	0	0	—	—	—	—

Bit 7~6 Unimplemented, read as "0"

Bit 5~4 **TB1~TB0:** Select Time Base Time-out Period
00: $1024/f_{TP}$
01: $2048/f_{TP}$
10: $4096/f_{TP}$
11: $8192/f_{TP}$

Bit 3~0 Unimplemented, read as "0"

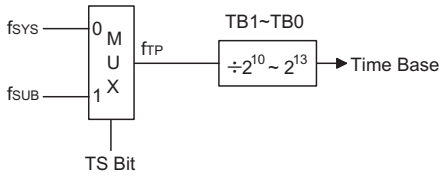

Time Base Structure

Timer/Event Counter Interrupt

For a Timer/Event Counter interrupt to occur, the global interrupt enable bit, EMI, and the corresponding timer interrupt enable bit, TE, must first be set. An actual Timer/Event Counter interrupt will take place when the Timer/Event Counter request flag, TF, is set, a situation that will occur when the relevant Timer/Event Counter overflows. When the interrupt is enabled, the stack is not full and a Timer/Event Counter n overflow occurs, a subroutine call to the relevant timer interrupt vector, will take place. When the interrupt is serviced, the timer interrupt request flag, TF, will be automatically reset and the EMI bit will be automatically cleared to disable other interrupts.

EEPROM Interrupt

An EEPROM Interrupt request will take place when the EEPROM Interrupt request flag, DEF, is set, which occurs when an EEPROM Write cycle ends. To allow the program to branch to its respective interrupt vector address, the global interrupt enable bit, EMI, and EEPROM Interrupt enable bit, DEE, must first be set. When the interrupt is enabled, the stack is not full and an EEPROM Write cycle ends, a subroutine call to the respective EEPROM Interrupt vector, will take place. When the EEPROM Interrupt is serviced, the DEF flag will be automatically cleared and the EMI bit will be automatically cleared to disable other interrupts.

Touch Key Interrupt

For a Touch Key interrupt to occur, the global interrupt enable bit, EMI, and the corresponding Touch Key interrupt enable TKME must be first set. An actual Touch Key interrupt will take place when the Touch Key request flag. TKMF, is set, a situation that will occur when the time slot counter overflows. When the interrupt is enabled, the stack is not full and the Touch Key time slot counter overflow occurs, a subroutine call to the relevant timer interrupt vector, will take place. When the interrupt is serviced, the Touch Key interrupt request flag, TKMF, will be automatically reset and the EMI bit will be automatically cleared to disable other interrupts.

The TKCFOV flag, which is the 16-bit C/F counter overflow flag will go high when any of the Touch Key Module 16-bit C/F counter overflows. As this flag will not be automatically cleared, it has to be cleared by the application program.

Module 0 only contains one 16-bit counter. The TK16OV flag, which is the 16-bit counter overflow flag will go high when the 16-bit counter overflows. As this flag will not be automatically cleared, it has to be cleared by the application program.

SIM Interrupt (except BS83B04A-4)

A SIM Interrupt request will take place when the SIM Interrupt request flag, SIMF, is set, which occurs when a byte of data has been received or transmitted by the SIM interface. To allow the program to branch to its respective interrupt vector address, the global interrupt enable bit, EMI, and the Serial Interface Interrupt enable bit, SIME, must first be set. When the interrupt is enabled, the stack is not full and a byte of data has been transmitted or received by the SIM interface, a subroutine call to the respective interrupt vector, will take place. When the Serial Interface Interrupt is serviced, the SIM interrupt request flag, SIMF, will be automatically cleared and the EMI bit will be automatically cleared to disable other interrupts.

I²C Interrupt (BS83B04A-4)

An I²C Interrupt request will take place when the I²C Interrupt request flag, I2CF, is set when the I²C time-out occurs, slave address matches or data byte transfer completes. To allow the program to branch to its respective interrupt vector address, the global interrupt enable bit, EMI, and the I²C Interrupt enable bit, I2CE, must first be set. When the interrupt is enabled, the stack is not full and one of the I²C interrupt event occurs, a subroutine call to the respective Interrupt vector, will take place. When the Interrupt is serviced, the interrupt request flag will be automatically cleared and the EMI bit will be automatically cleared to disable other interrupts.

Interrupt Wake-up Function

Each of the interrupt functions has the capability of waking up the microcontroller when in the SLEEP or IDLE Mode. A wake-up is generated when an interrupt request flag changes from low to high and is independent of whether the interrupt is enabled or not. Therefore, even though the device is in the SLEEP or IDLE Mode and its system oscillator stopped, situations such as external edge transitions on the external interrupt pins, a low power supply voltage or comparator input change may cause their respective interrupt flag to be set high and consequently generate an interrupt. Care must therefore be taken if spurious wake-up situations are to be avoided. If an interrupt wake-up function is to be disabled then the corresponding interrupt request flag should be set high before the device enters the SLEEP or IDLE Mode. The interrupt enable bits have no effect on the interrupt wake-up function.

Programming Considerations

By disabling the relevant interrupt enable bits, a requested interrupt can be prevented from being serviced, however, once an interrupt request flag is set, it will remain in this condition in the interrupt register until the corresponding interrupt is serviced or until the request flag is cleared by the application program.

It is recommended that programs do not use the “CALL” instruction within the interrupt service subroutine. Interrupts often occur in an unpredictable manner or need to be serviced immediately. If only one stack is left and the interrupt is not well controlled, the original control sequence will be damaged once a CALL subroutine is executed in the interrupt subroutine.

Every interrupt has the capability of waking up the microcontroller when it is in SLEEP or IDLE Mode, the wake up being generated when the interrupt request flag changes from low to high. If it is required to prevent a certain interrupt from waking up the microcontroller then its respective request flag should be first set high before enter SLEEP or IDLE Mode.

As only the Program Counter is pushed onto the stack, then when the interrupt is serviced, if the contents of the accumulator, status register or other registers are altered by the interrupt service program, their contents should be saved to the memory at the beginning of the interrupt service routine.

To return from an interrupt subroutine, either a RET or RETI instruction may be executed. The RETI instruction in addition to executing a return to the main program also automatically sets the EMI bit high to allow further interrupts. The RET instruction however only executes a return to the main program leaving the EMI bit in its present zero state and therefore disabling the execution of further interrupts.

Application Circuits

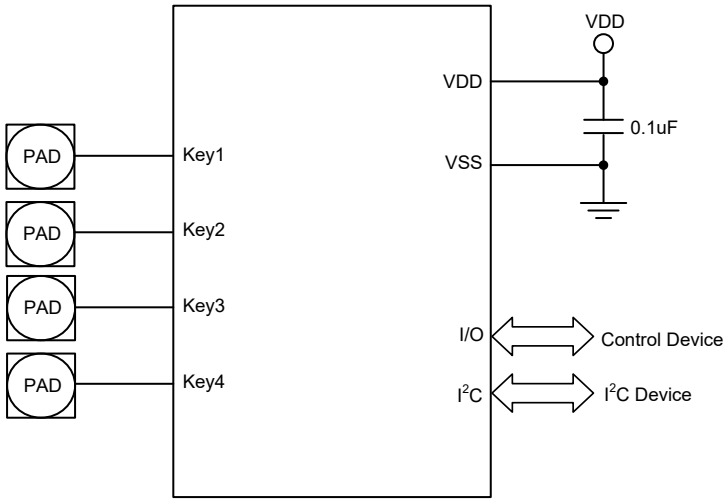

BS83B04A-4

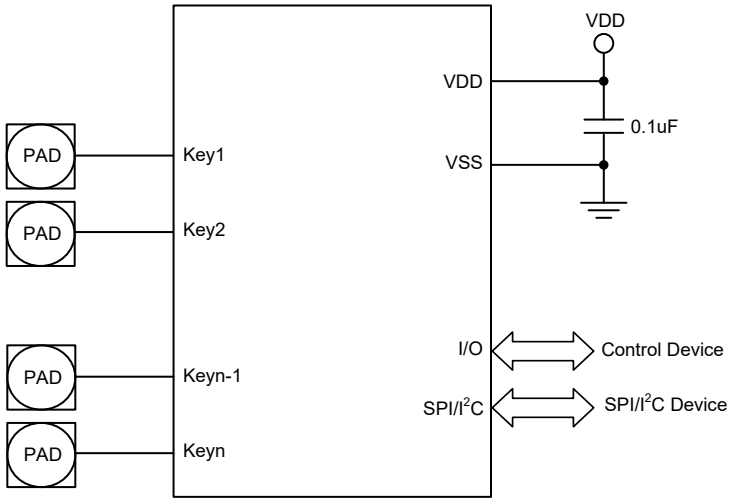

BS83B08A-3/BS83B08A-4
BS83B12A-3/BS83B12A-4
BS83B16A-3/BS83B16A-4

Note: "*" It is recommended that this component is added for added ESD protection.

"**" It is recommended that this component is added in environments where power line noise is significant.

Instruction Set

Introduction

Central to the successful operation of any microcontroller is its instruction set, which is a set of program instruction codes that directs the microcontroller to perform certain operations. In the case of Holtek microcontroller, a comprehensive and flexible set of over 60 instructions is provided to enable programmers to implement their application with the minimum of programming overheads.

For easier understanding of the various instruction codes, they have been subdivided into several functional groupings.

Instruction Timing

Most instructions are implemented within one instruction cycle. The exceptions to this are branch, call, or table read instructions where two instruction cycles are required. One instruction cycle is equal to 4 system clock cycles, therefore in the case of an 8MHz system oscillator, most instructions would be implemented within 0.5μs and branch or call instructions would be implemented within 1μs. Although instructions which require one more cycle to implement are generally limited to the JMP, CALL, RET, RETI and table read instructions, it is important to realize that any other instructions which involve manipulation of the Program Counter Low register or PCL will also take one more cycle to implement. As instructions which change the contents of the PCL will imply a direct jump to that new address, one more cycle will be required. Examples of such instructions would be "CLR PCL" or "MOV PCL, A". For the case of skip instructions, it must be noted that if the result of the comparison involves a skip operation then this will also take one more cycle, if no skip is involved then only one cycle is required.

Moving and Transferring Data

The transfer of data within the microcontroller program is one of the most frequently used operations. Making use of three kinds of MOV instructions, data can be transferred from registers to the Accumulator and vice-versa as well as being able to move specific immediate data directly into the Accumulator. One of the most important data transfer applications is to receive data from the input ports and transfer data to the output ports.

Arithmetic Operations

The ability to perform certain arithmetic operations and data manipulation is a necessary feature of most microcontroller applications. Within the Holtek microcontroller instruction set are a range of add and subtract instruction mnemonics to enable the necessary arithmetic to be carried out. Care must be taken to ensure correct handling of carry and borrow data when results exceed 255 for addition and less than 0 for subtraction. The increment and decrement instructions INC, INCA, DEC and DECA provide a simple means of increasing or decreasing by a value of one of the values in the destination specified.

Logical and Rotate Operation

The standard logical operations such as AND, OR, XOR and CPL all have their own instruction within the Holtek microcontroller instruction set. As with the case of most instructions involving data manipulation, data must pass through the Accumulator which may involve additional programming steps. In all logical data operations, the zero flag may be set if the result of the operation is zero. Another form of logical data manipulation comes from the rotate instructions such as RR, RL, RRC and RLC which provide a simple means of rotating one bit right or left. Different rotate instructions exist depending on program requirements. Rotate instructions are useful for serial port programming applications where data can be rotated from an internal register into the Carry bit from where it can be examined and the necessary serial bit set high or low. Another application which rotate data operations are used is to implement multiplication and division calculations.

Branches and Control Transfer

Program branching takes the form of either jumps to specified locations using the JMP instruction or to a subroutine using the CALL instruction. They differ in the sense that in the case of a subroutine call, the program must return to the instruction immediately when the subroutine has been carried out. This is done by placing a return instruction "RET" in the subroutine which will cause the program to jump back to the address right after the CALL instruction. In the case of a JMP instruction, the program simply jumps to the desired location. There is no requirement to jump back to the original jumping off point as in the case of the CALL instruction. One special and extremely useful set of branch instructions are the conditional branches. Here a decision is first made regarding the condition of a certain data memory or individual bits. Depending upon the conditions, the program will continue with the next instruction or skip over it and jump to the following instruction. These instructions are the key to decision making and branching within the program perhaps determined by the condition of certain input switches or by the condition of internal data bits.

Bit Operations

The ability to provide single bit operations on Data Memory is an extremely flexible feature of all Holtek microcontrollers. This feature is especially useful for output port bit programming where individual bits or port pins can be directly set high or low using either the "SET [m].i" or "CLR [m].i" instructions respectively. The feature removes the need for programmers to first read the 8-bit output port, manipulate the input data to ensure that other bits are not changed and then output the port with the correct new data. This read-modify-write process is taken care of automatically when these bit operation instructions are used.

Table Read Operations

Data storage is normally implemented by using registers. However, when working with large amounts of fixed data, the volume involved often makes it inconvenient to store the fixed data in the Data Memory. To overcome this problem, Holtek microcontrollers allow an area of Program Memory to be set as a table where data can be directly stored. A set of easy to use instructions provides the means by which this fixed data can be referenced and retrieved from the Program Memory.

Other Operations

In addition to the above functional instructions, a range of other instructions also exist such as the "HALT" instruction for Power-down operations and instructions to control the operation of the Watchdog Timer for reliable program operations under extreme electric or electromagnetic environments. For their relevant operations, refer to the functional related sections.

Instruction Set Summary

The following table depicts a summary of the instruction set categorised according to function and can be consulted as a basic instruction reference using the following listed conventions.

Table Conventions

x: Bits immediate data
m: Data Memory address
A: Accumulator
i: 0~7 number of bits
addr: Program memory address

Mnemonic	Description	Cycles	Flag Affected
Arithmetic			
ADD A,[m]	Add Data Memory to ACC	1	Z, C, AC, OV
ADDM A,[m]	Add ACC to Data Memory	1Note	Z, C, AC, OV
ADD A,x	Add immediate data to ACC	1	Z, C, AC, OV
ADC A,[m]	Add Data Memory to ACC with Carry	1	Z, C, AC, OV
ADCM A,[m]	Add ACC to Data memory with Carry	1Note	Z, C, AC, OV
SUB A,x	Subtract immediate data from the ACC	1	Z, C, AC, OV
SUB A,[m]	Subtract Data Memory from ACC	1	Z, C, AC, OV
SUBM A,[m]	Subtract Data Memory from ACC with result in Data Memory	1Note	Z, C, AC, OV
SBC A,[m]	Subtract Data Memory from ACC with Carry	1	Z, C, AC, OV
SBCM A,[m]	Subtract Data Memory from ACC with Carry, result in Data Memory	1Note	Z, C, AC, OV
DAA [m]	Decimal adjust ACC for Addition with result in Data Memory	1Note	C
Logic Operation			
AND A,[m]	Logical AND Data Memory to ACC	1	Z
OR A,[m]	Logical OR Data Memory to ACC	1	Z
XOR A,[m]	Logical XOR Data Memory to ACC	1	Z
ANDM A,[m]	Logical AND ACC to Data Memory	1Note	Z
ORM A,[m]	Logical OR ACC to Data Memory	1Note	Z
XORM A,[m]	Logical XOR ACC to Data Memory	1Note	Z
AND A,x	Logical AND immediate Data to ACC	1	Z
OR A,x	Logical OR immediate Data to ACC	1	Z
XOR A,x	Logical XOR immediate Data to ACC	1	Z
CPL [m]	Complement Data Memory	1Note	Z
CPLA [m]	Complement Data Memory with result in ACC	1	Z
Increment & Decrement			
INCA [m]	Increment Data Memory with result in ACC	1	Z
INC [m]	Increment Data Memory	1Note	Z
DECA [m]	Decrement Data Memory with result in ACC	1	Z
DEC [m]	Decrement Data Memory	1Note	Z
Rotate			
RRA [m]	Rotate Data Memory right with result in ACC	1	None
RR [m]	Rotate Data Memory right	1Note	None
RRCA [m]	Rotate Data Memory right through Carry with result in ACC	1	C
RRC [m]	Rotate Data Memory right through Carry	1Note	C
RLA [m]	Rotate Data Memory left with result in ACC	1	None
RL [m]	Rotate Data Memory left	1Note	None
RLCA [m]	Rotate Data Memory left through Carry with result in ACC	1	C
RLC [m]	Rotate Data Memory left through Carry	1Note	C

Mnemonic	Description	Cycles	Flag Affected
Data Move			
MOV A,[m]	Move Data Memory to ACC	1	None
MOV [m],A	Move ACC to Data Memory	1Note	None
MOV A,x	Move immediate data to ACC	1	None
Bit Operation			
CLR [m].i	Clear bit of Data Memory	1Note	None
SET [m].i	Set bit of Data Memory	1Note	None
Branch Operation			
JMP addr	Jump unconditionally	2	None
SZ [m]	Skip if Data Memory is zero	1Note	None
SZA [m]	Skip if Data Memory is zero with data movement to ACC	1Note	None
SZ [m].i	Skip if bit i of Data Memory is zero	1Note	None
SNZ [m].i	Skip if bit i of Data Memory is not zero	1Note	None
SIZ [m]	Skip if increment Data Memory is zero	1Note	None
SDZ [m]	Skip if decrement Data Memory is zero	1Note	None
SIZA [m]	Skip if increment Data Memory is zero with result in ACC	1Note	None
SDZA [m]	Skip if decrement Data Memory is zero with result in ACC	1Note	None
CALL addr	Subroutine call	2	None
RET	Return from subroutine	2	None
RET A,x	Return from subroutine and load immediate data to ACC	2	None
RETI	Return from interrupt	2	None
Table Read Operation			
TABRD [m]	Read table (specific page or current page) to TBLH and Data Memory	2Note	None
TABRDL [m]	Read table (last page) to TBLH and Data Memory	2Note	None
Miscellaneous			
NOP	No operation	1	None
CLR [m]	Clear Data Memory	1Note	None
SET [m]	Set Data Memory	1Note	None
CLR WDT	Clear Watchdog Timer	1	TO, PDF
SWAP [m]	Swap nibbles of Data Memory	1Note	None
SWAPA [m]	Swap nibbles of Data Memory with result in ACC	1	None
HALT	Enter power down mode	1	TO, PDF

Note: 1. For skip instructions, if the result of the comparison involves a skip then two cycles are required, if no skip takes place only one cycle is required.

2. Any instruction which changes the contents of the PCL will also require 2 cycles for execution.

Instruction Definition

ADC A,[m] Add Data Memory to ACC with Carry

Description The contents of the specified Data Memory, Accumulator and the carry flag are added. The result is stored in the Accumulator.

Operation ACC ← ACC + [m] + C

Affected flag(s) OV, Z, AC, C

ADCM A,[m] Add ACC to Data Memory with Carry

Description The contents of the specified Data Memory, Accumulator and the carry flag are added. The result is stored in the specified Data Memory.

Operation [m] ← ACC + [m] + C

Affected flag(s) OV, Z, AC, C

ADD A,[m] Add Data Memory to ACC

Description The contents of the specified Data Memory and the Accumulator are added. The result is stored in the Accumulator.

Operation ACC ← ACC + [m]

Affected flag(s) OV, Z, AC, C

ADD A,x Add immediate data to ACC

Description The contents of the Accumulator and the specified immediate data are added. The result is stored in the Accumulator.

Operation ACC ← ACC + x

Affected flag(s) OV, Z, AC, C

ADDM A,[m] Add ACC to Data Memory

Description The contents of the specified Data Memory and the Accumulator are added. The result is stored in the specified Data Memory.

Operation [m] ← ACC + [m]

Affected flag(s) OV, Z, AC, C

AND A,[m] Logical AND Data Memory to ACC

Description Data in the Accumulator and the specified Data Memory perform a bitwise logical AND operation. The result is stored in the Accumulator.

Operation ACC ← ACC "AND" [m]

Affected flag(s) Z

AND A,x Logical AND immediate data to ACC

Description Data in the Accumulator and the specified immediate data perform a bit wise logical AND operation. The result is stored in the Accumulator.

Operation ACC ← ACC "AND" x

Affected flag(s) Z

ANDM A,[m] Logical AND ACC to Data Memory

Description Data in the specified Data Memory and the Accumulator perform a bitwise logical AND operation. The result is stored in the Data Memory.

Operation [m] ← ACC "AND" [m]

Affected flag(s) Z

CALL addr Subroutine call

Description: Unconditionally calls a subroutine at the specified address. The Program Counter then increments by 1 to obtain the address of the next instruction which is then pushed onto the stack. The specified address is then loaded and the program continues execution from this new address. As this instruction requires an additional operation, it is a two cycle instruction.

Operation: Stack ← Program Counter + 1
Program Counter ← addr

Affected flag(s): None

CLR [m] Clear Data Memory

Description: Each bit of the specified Data Memory is cleared to 0.

Operation: [m] ← 00H

Affected flag(s): None

CLR [m].i Clear bit of Data Memory

Description: Bit i of the specified Data Memory is cleared to 0.

Operation: [m].i ← 0

Affected flag(s): None

CLR WDT Clear Watchdog Timer

Description: The TO, PDF flags and the WDT are all cleared.

Operation: WDT cleared
TO ← 0
PDF ← 0

Affected flag(s): TO, PDF

CPL [m] Complement Data Memory

Description: Each bit of the specified Data Memory is logically complemented (1′s complement). Bits which previously contained a 1 are changed to 0 and vice versa.

Operation: [m] ← $\overline{[m]}$

Affected flag(s): Z

CPLA [m] Complement Data Memory with result in ACC

Description: Each bit of the specified Data Memory is logically complemented (1′s complement). Bits which previously contained a 1 are changed to 0 and vice versa. The complemented result is stored in the Accumulator and the contents of the Data Memory remain unchanged.

Operation: ACC ← $\overline{[m]}$

Affected flag(s): Z

DAA [m] Decimal-Adjust ACC for addition with result in Data Memory

Description: Convert the contents of the Accumulator value to a BCD (Binary Coded Decimal) value resulting from the previous addition of two BCD variables. If the low nibble is greater than 9 or if AC flag is set, then a value of 6 will be added to the low nibble. Otherwise the low nibble remains unchanged. If the high nibble is greater than 9 or if the C flag is set, then a value of 6 will be added to the high nibble. Essentially, the decimal conversion is performed by adding 00H, 06H, 60H or 66H depending on the Accumulator and flag conditions. Only the C flag may be affected by this instruction which indicates that if the original BCD sum is greater than 100, it allows multiple precision decimal addition.

Operation: [m] ← ACC + 00H or
[m] ← ACC + 06H or
[m] ← ACC + 60H or
[m] ← ACC + 66H

Affected flag(s): C

DEC [m] Decrement Data Memory

Description Data in the specified Data Memory is decremented by 1.

Operation [m] ← [m] − 1

Affected flag(s) Z

DECA [m] Decrement Data Memory with result in ACC

Description Data in the specified Data Memory is decremented by 1. The result is stored in the Accumulator. The contents of the Data Memory remain unchanged.

Operation ACC ← [m] − 1

Affected flag(s) Z

HALT Enter power down mode

Description This instruction stops the program execution and turns off the system clock. The contents of the Data Memory and registers are retained. The WDT and prescaler are cleared. The power down flag PDF is set and the WDT time-out flag TO is cleared.

Operation TO ← 0
PDF ← 1

Affected flag(s) TO, PDF

INC [m] Increment Data Memory

Description Data in the specified Data Memory is incremented by 1.

Operation [m] ← [m] + 1

Affected flag(s) Z

INCA [m] Increment Data Memory with result in ACC

Description Data in the specified Data Memory is incremented by 1. The result is stored in the Accumulator. The contents of the Data Memory remain unchanged.

Operation ACC ← [m] + 1

Affected flag(s) Z

JMP addr Jump unconditionally

Description The contents of the Program Counter are replaced with the specified address. Program execution then continues from this new address. As this requires the insertion of a dummy instruction while the new address is loaded, it is a two cycle instruction.

Operation Program Counter ← addr

Affected flag(s) None

MOV A,[m] Move Data Memory to ACC

Description The contents of the specified Data Memory are copied to the Accumulator.

Operation ACC ← [m]

Affected flag(s) None

MOV A,x Move immediate data to ACC

Description The immediate data specified is loaded into the Accumulator.

Operation ACC ← x

Affected flag(s) None

MOV [m],A Move ACC to Data Memory

Description The contents of the Accumulator are copied to the specified Data Memory.

Operation [m] ← ACC

Affected flag(s) None

NOP	No operation
Description	No operation is performed. Execution continues with the next instruction.
Operation	No operation
Affected flag(s)	None

OR A,[m]	Logical OR Data Memory to ACC
Description	Data in the Accumulator and the specified Data Memory perform a bitwise logical OR operation. The result is stored in the Accumulator.
Operation	ACC ← ACC ″OR″ [m]
Affected flag(s)	Z

OR A,x	Logical OR immediate data to ACC
Description	Data in the Accumulator and the specified immediate data perform a bitwise logical OR operation. The result is stored in the Accumulator.
Operation	ACC ← ACC ″OR″ x
Affected flag(s)	Z

ORM A,[m]	Logical OR ACC to Data Memory
Description	Data in the specified Data Memory and the Accumulator perform a bitwise logical OR operation. The result is stored in the Data Memory.
Operation	[m] ← ACC ″OR″ [m]
Affected flag(s)	Z

RET	Return from subroutine
Description	The Program Counter is restored from the stack. Program execution continues at the restored address.
Operation	Program Counter ← Stack
Affected flag(s)	None

RET A,x	Return from subroutine and load immediate data to ACC
Description	The Program Counter is restored from the stack and the Accumulator loaded with the specified immediate data. Program execution continues at the restored address.
Operation	Program Counter ← Stack ACC ← x
Affected flag(s)	None

RETI	Return from interrupt
Description	The Program Counter is restored from the stack and the interrupts are re-enabled by setting the EMI bit. EMI is the master interrupt global enable bit. If an interrupt was pending when the RETI instruction is executed, the pending Interrupt routine will be processed before returning to the main program.
Operation	Program Counter ← Stack EMI ← 1
Affected flag(s)	None

RL [m]	Rotate Data Memory left
Description	The contents of the specified Data Memory are rotated left by 1 bit with bit 7 rotated into bit 0.
Operation	[m].(i+1) ← [m].i; (i=0~6) [m].0 ← [m].7
Affected flag(s)	None

RLA [m] Rotate Data Memory left with result in ACC

Description The contents of the specified Data Memory are rotated left by 1 bit with bit 7 rotated into bit 0. The rotated result is stored in the Accumulator and the contents of the Data Memory remain unchanged.

Operation ACC.(i+1) ← [m].i; (i=0~6)
ACC.0 ← [m].7

Affected flag(s) None

RLC [m] Rotate Data Memory left through Carry

Description The contents of the specified Data Memory and the carry flag are rotated left by 1 bit. Bit 7 replaces the Carry bit and the original carry flag is rotated into bit 0.

Operation [m].(i+1) ← [m].i; (i=0~6)
[m].0 ← C
C ← [m].7

Affected flag(s) C

RLCA [m] Rotate Data Memory left through Carry with result in ACC

Description Data in the specified Data Memory and the carry flag are rotated left by 1 bit. Bit 7 replaces the Carry bit and the original carry flag is rotated into the bit 0. The rotated result is stored in the Accumulator and the contents of the Data Memory remain unchanged.

Operation ACC.(i+1) ← [m].i; (i=0~6)
ACC.0 ← C
C ← [m].7

Affected flag(s) C

RR [m] Rotate Data Memory right

Description The contents of the specified Data Memory are rotated right by 1 bit with bit 0 rotated into bit 7.

Operation [m].i ← [m].(i+1); (i=0~6)
[m].7 ← [m].0

Affected flag(s) None

RRA [m] Rotate Data Memory right with result in ACC

Description Data in the specified Data Memory is rotated right by 1 bit with bit 0 rotated into bit 7.
The rotated result is stored in the Accumulator and the contents of the Data Memory remain unchanged.

Operation ACC.i ← [m].(i+1); (i=0~6)
ACC.7 ← [m].0

Affected flag(s) None

RRC [m] Rotate Data Memory right through Carry

Description The contents of the specified Data Memory and the carry flag are rotated right by 1 bit. Bit 0 replaces the Carry bit and the original carry flag is rotated into bit 7.

Operation [m].i ← [m].(i+1); (i=0~6)
[m].7 ← C
C ← [m].0

Affected flag(s) C

RRCA [m] Rotate Data Memory right through Carry with result in ACC

Description: Data in the specified Data Memory and the carry flag are rotated right by 1 bit. Bit 0 replaces the Carry bit and the original carry flag is rotated into bit 7. The rotated result is stored in the Accumulator and the contents of the Data Memory remain unchanged.

Operation:
ACC.i ← [m].(i+1); (i=0~6)
ACC.7 ← C
C ← [m].0

Affected flag(s): C

SBC A,[m] Subtract Data Memory from ACC with Carry

Description: The contents of the specified Data Memory and the complement of the carry flag are subtracted from the Accumulator. The result is stored in the Accumulator. Note that if the result of subtraction is negative, the C flag will be cleared to 0, otherwise if the result is positive or zero, the C flag will be set to 1.

Operation: ACC ← ACC − [m] − $\overline{C}$

Affected flag(s): OV, Z, AC, C

SBCM A,[m] Subtract Data Memory from ACC with Carry and result in Data Memory

Description: The contents of the specified Data Memory and the complement of the carry flag are subtracted from the Accumulator. The result is stored in the Data Memory. Note that if the result of subtraction is negative, the C flag will be cleared to 0, otherwise if the result is positive or zero, the C flag will be set to 1.

Operation: [m] ← ACC − [m] − $\overline{C}$

Affected flag(s): OV, Z, AC, C

SDZ [m] Skip if decrement Data Memory is 0

Description: The contents of the specified Data Memory are first decremented by 1. If the result is 0 the following instruction is skipped. As this requires the insertion of a dummy instruction while the next instruction is fetched, it is a two cycle instruction. If the result is not 0 the program proceeds with the following instruction.

Operation:
[m] ← [m] − 1
Skip if [m]=0

Affected flag(s): None

SDZA [m] Skip if decrement Data Memory is zero with result in ACC

Description: The contents of the specified Data Memory are first decremented by 1. If the result is 0, the following instruction is skipped. The result is stored in the Accumulator but the specified Data Memory contents remain unchanged. As this requires the insertion of a dummy instruction while the next instruction is fetched, it is a two cycle instruction. If the result is not 0, the program proceeds with the following instruction.

Operation:
ACC ← [m] − 1
Skip if ACC=0

Affected flag(s): None

SET [m] Set Data Memory

Description: Each bit of the specified Data Memory is set to 1.

Operation: [m] ← FFH

Affected flag(s): None

SET [m].i Set bit of Data Memory

Description: Bit i of the specified Data Memory is set to 1.

Operation: [m].i ← 1

Affected flag(s): None

SIZ [m] Skip if increment Data Memory is 0

Description The contents of the specified Data Memory are first incremented by 1. If the result is 0, the following instruction is skipped. As this requires the insertion of a dummy instruction while the next instruction is fetched, it is a two cycle instruction. If the result is not 0 the program proceeds with the following instruction.

Operation [m] ← [m] + 1
Skip if [m]=0

Affected flag(s) None

SIZA [m] Skip if increment Data Memory is zero with result in ACC

Description The contents of the specified Data Memory are first incremented by 1. If the result is 0, the following instruction is skipped. The result is stored in the Accumulator but the specified Data Memory contents remain unchanged. As this requires the insertion of a dummy instruction while the next instruction is fetched, it is a two cycle instruction. If the result is not 0 the program proceeds with the following instruction.

Operation ACC ← [m] + 1
Skip if ACC=0

Affected flag(s) None

SNZ [m].i Skip if bit i of Data Memory is not 0

Description If bit i of the specified Data Memory is not 0, the following instruction is skipped. As this requires the insertion of a dummy instruction while the next instruction is fetched, it is a two cycle instruction. If the result is 0 the program proceeds with the following instruction.

Operation Skip if [m].i ≠ 0

Affected flag(s) None

SUB A,[m] Subtract Data Memory from ACC

Description The specified Data Memory is subtracted from the contents of the Accumulator. The result is stored in the Accumulator. Note that if the result of subtraction is negative, the C flag will be cleared to 0, otherwise if the result is positive or zero, the C flag will be set to 1.

Operation ACC ← ACC − [m]

Affected flag(s) OV, Z, AC, C

SUBM A,[m] Subtract Data Memory from ACC with result in Data Memory

Description The specified Data Memory is subtracted from the contents of the Accumulator. The result is stored in the Data Memory. Note that if the result of subtraction is negative, the C flag will be cleared to 0, otherwise if the result is positive or zero, the C flag will be set to 1.

Operation [m] ← ACC − [m]

Affected flag(s) OV, Z, AC, C

SUB A,x Subtract immediate data from ACC

Description The immediate data specified by the code is subtracted from the contents of the Accumulator. The result is stored in the Accumulator. Note that if the result of subtraction is negative, the C flag will be cleared to 0, otherwise if the result is positive or zero, the C flag will be set to 1.

Operation ACC ← ACC − x

Affected flag(s) OV, Z, AC, C

SWAP [m] Swap nibbles of Data Memory

Description The low-order and high-order nibbles of the specified Data Memory are interchanged.

Operation [m].3~[m].0 ↔ [m].7~[m].4

Affected flag(s) None

SWAPA [m] Swap nibbles of Data Memory with result in ACC

Description The low-order and high-order nibbles of the specified Data Memory are interchanged. The result is stored in the Accumulator. The contents of the Data Memory remain unchanged.

Operation ACC.3~ACC.0 ← [m].7~[m].4
ACC.7~ACC.4 ← [m].3~[m].0

Affected flag(s) None

SZ [m] Skip if Data Memory is 0

Description The contents of the specified Data Memory are read out and then written to the specified Data Memory again. If the contents of the specified Data Memory is 0, the following instruction is skipped. As this requires the insertion of a dummy instruction while the next instruction is fetched, it is a two cycle instruction. If the result is not 0 the program proceeds with the following instruction.

Operation Skip if [m]=0

Affected flag(s) None

SZA [m] Skip if Data Memory is 0 with data movement to ACC

Description The contents of the specified Data Memory are copied to the Accumulator. If the value is zero, the following instruction is skipped. As this requires the insertion of a dummy instruction while the next instruction is fetched, it is a two cycle instruction. If the result is not 0 the program proceeds with the following instruction.

Operation ACC ← [m]
Skip if [m]=0

Affected flag(s) None

SZ [m].i Skip if bit i of Data Memory is 0

Description If bit i of the specified Data Memory is 0, the following instruction is skipped. As this requires the insertion of a dummy instruction while the next instruction is fetched, it is a two cycle instruction. If the result is not 0, the program proceeds with the following instruction.

Operation Skip if [m].i=0

Affected flag(s) None

TABRD [m] Read table (specific page or current page) to TBLH and Data Memory

Description The low byte of the program code addressed by the table pointer (TBHP and TBLP or only TBLP if no TBHP) is moved to the specified Data Memory and the high byte moved to TBLH.

Operation [m] ← program code (low byte)
TBLH ← program code (high byte)

Affected flag(s) None

TABRDL [m] Read table (last page) to TBLH and Data Memory

Description The low byte of the program code (last page) addressed by the table pointer (TBLP) is moved to the specified Data Memory and the high byte moved to TBLH.

Operation [m] ← program code (low byte)
TBLH ← program code (high byte)

Affected flag(s) None

XOR A,[m] Logical XOR Data Memory to ACC

Description Data in the Accumulator and the specified Data Memory perform a bitwise logical XOR operation. The result is stored in the Accumulator.

Operation ACC ← ACC ″XOR″ [m]

Affected flag(s) Z

XORM A,[m]	Logical XOR ACC to Data Memory
Description	Data in the specified Data Memory and the Accumulator perform a bitwise logical XOR operation. The result is stored in the Data Memory.
Operation	[m] ← ACC ″XOR″ [m]
Affected flag(s)	Z

XOR A,x	Logical XOR immediate data to ACC
Description	Data in the Accumulator and the specified immediate data perform a bitwise logical XOR operation. The result is stored in the Accumulator.
Operation	ACC ← ACC ″XOR″ x
Affected flag(s)	Z

Package Information

Note that the package information provided here is for consultation purposes only. As this information may be updated at regular intervals users are reminded to consult the Holtek website for the latest version of the Package/Carton Information.

Additional supplementary information with regard to packaging is listed below. Click on the relevant section to be transferred to the relevant website page.

- Package Information (include Outline Dimensions, Product Tape and Reel Specifications)
- The Operation Instruction of Packing Materials
- Carton information

8-pin SOP (150mil) Outline Dimensions

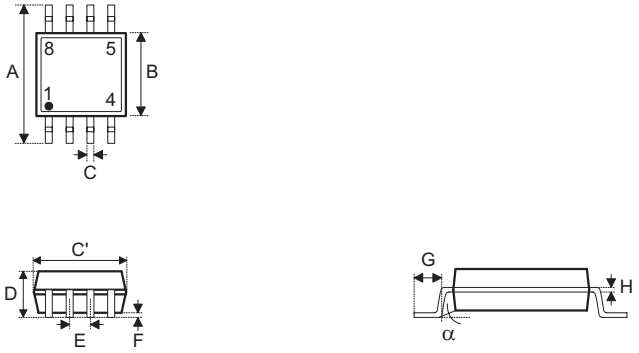

Symbol	Dimensions in inch		
	Min.	Nom.	Max.
A		0.236 BSC	
B		0.154 BSC	
C	0.012	—	0.020
C′		0.193 BSC	
D	—	—	0.069
E		0.050 BSC	
F	0.004	—	0.010
G	0.016	—	0.050
H	0.004	—	0.010
α	0°	—	8°

Symbol	Dimensions in mm		
	Min.	Nom.	Max.
A		6.00 BSC	
B		3.90 BSC	
C	0.31	—	0.51
C′		4.90 BSC	
D	—	—	1.75
E		1.27 BSC	
F	0.10	—	0.25
G	0.40	—	1.27
H	0.10	—	0.25
α	0°	—	8°

10-pin MSOP Outline Dimensions

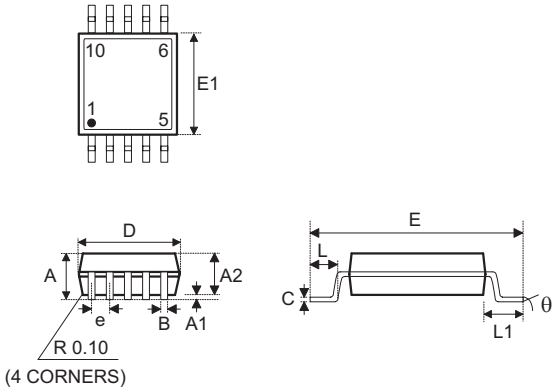

Symbol	Dimensions in inch		
	Min.	Nom.	Max.
A	—	—	0.043
A1	0.000	—	0.006
A2	0.030	0.033	0.037
B	0.007	—	0.013
C	0.003	—	0.009
D		0.118 BSC	
E		0.193 BSC	
E1		0.118 BSC	
e		0.020 BSC	
L	0.016	0.024	0.031
L1		0.037 BSC	
y	—	0.004	—
θ	0°	—	8°

Symbol	Dimensions in mm		
	Min.	Nom.	Max.
A	—	—	1.10
A1	0.00	—	0.15
A2	0.75	0.85	0.95
B	0.17	—	0.33
C	0.08	—	0.23
D		3.00 BSC	
E		4.90 BSC	
E1		3.00 BSC	
e		0.50 BSC	
L	0.40	0.60	0.80
L1		0.95 BSC	
y	—	0.10	—
θ	0°	—	8°

16-pin NSOP (150mil) Outline Dimensions

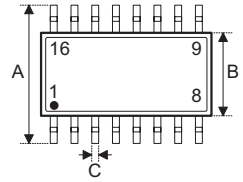

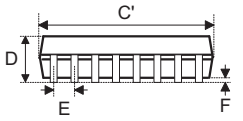

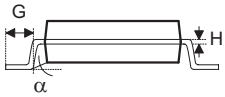

Symbol	Dimensions in inch		
	Min.	Nom.	Max.
A		0.236 BSC	
B		0.154 BSC	
C	0.012	—	0.020
C’		0.390 BSC	
D	—	—	0.069
E		0.050 BSC	
F	0.004	—	0.010
G	0.016	—	0.050
H	0.004	—	0.010
α	0°	—	8°

Symbol	Dimensions in mm		
	Min.	Nom.	Max.
A		6.00 BSC	
B		3.90 BSC	
C	0.31	—	0.51
C’		9.90 BSC	
D	—	—	1.75
E		1.27 BSC	
F	0.10	—	0.25
G	0.40	—	1.27
H	0.10	—	0.25
α	0°	—	8°

16-pin SSOP (150mil) Outline Dimensions

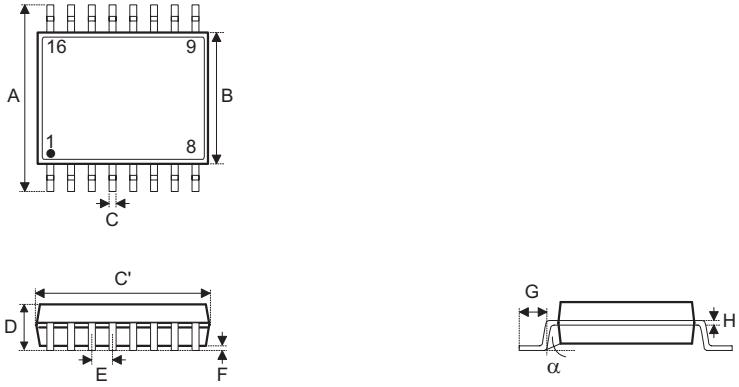

Symbol	Dimensions in inch		
	Min.	Nom.	Max.
A		0.236 BSC	
B		0.154 BSC	
C	0.008	—	0.012
C’		0.193 BSC	
D	—	—	0.069
E		0.025 BSC	
F	0.004	—	0.010
G	0.016	—	0.050
H	0.004	—	0.010
α	0°	—	8°

Symbol	Dimensions in mm		
	Min.	Nom.	Max.
A		6.00 BSC	
B		3.90 BSC	
C	0.20	—	0.30
C’		4.90 BSC	
D	—	—	1.75
E		0.635 BSC	
F	0.10	—	0.25
G	0.41	—	1.27
H	0.10	—	0.25
α	0°	—	8°

20-pin SOP (300mil) Outline Dimensions

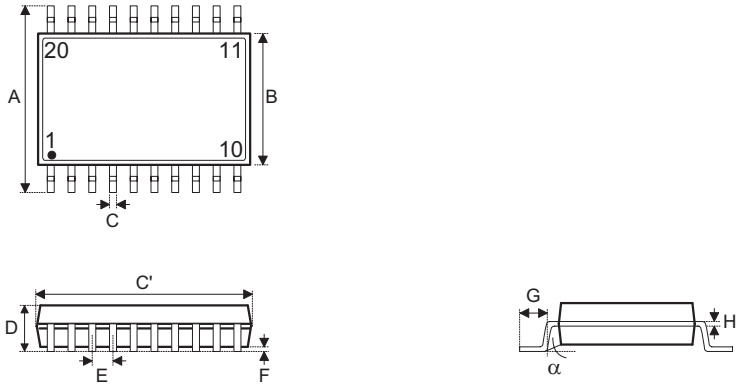

Symbol	Dimensions in inch		
	Min.	Nom.	Max.
A		0.406 BSC	
B		0.295 BSC	
C	0.012	—	0.020
C’		0.504 BSC	
D	—	—	0.104
E		0.050 BSC	
F	0.004	—	0.012
G	0.016	—	0.050
H	0.008	—	0.013
α	0°	—	8°

Symbol	Dimensions in mm		
	Min.	Nom.	Max.
A		10.30 BSC	
B		7.50 BSC	
C	0.31	—	0.51
C’		12.80 BSC	
D	—	—	2.65
E		1.27 BSC	
F	0.10	—	0.30
G	0.40	—	1.27
H	0.20	—	0.33
α	0°	—	8°

20-pin SSOP (150mil) Outline Dimensions

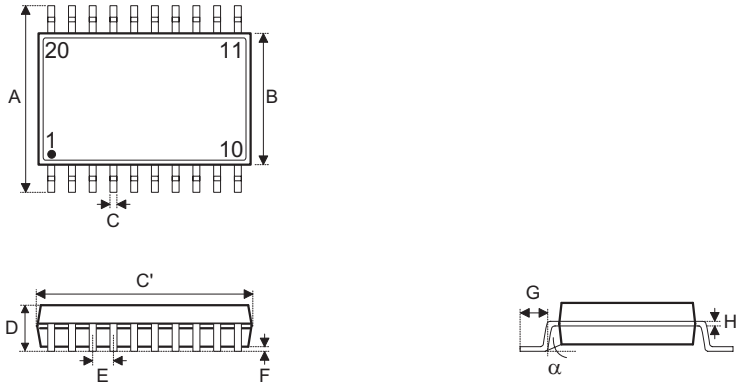

Symbol	Dimensions in inch		
	Min.	Nom.	Max.
A		0.236 BSC	
B		0.154 BSC	
C	0.008	—	0.012
C'		0.341 BSC	
D	—	—	0.069
E		0.025 BSC	
F	0.004	—	0.010
G	0.016	—	0.050
H	0.004	—	0.010
α	0°	—	8°

Symbol	Dimensions in mm		
	Min.	Nom.	Max.
A		6.00 BSC	
B		3.90 BSC	
C	0.20	—	0.30
C'		8.66 BSC	
D	—	—	1.75
E		0.635 BSC	
F	0.10	—	0.25
G	0.41	—	1.27
H	0.10	—	0.25
α	0°	—	8°

24-pin SOP (300mil) Outline Dimensions

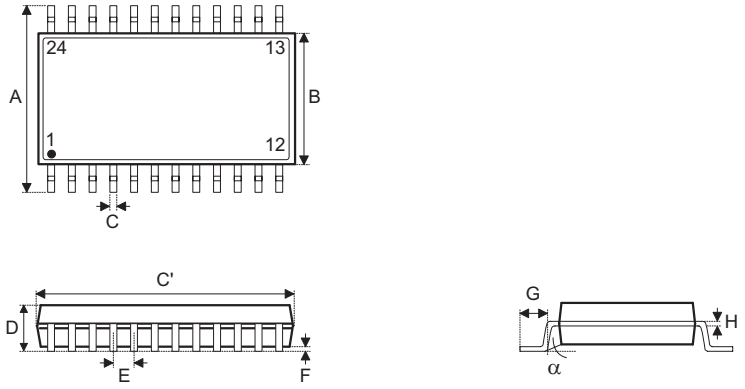

Symbol	Dimensions in inch		
	Min.	Nom.	Max.
A		0.406 BSC	
B		0.295 BSC	
C	0.012	—	0.020
C’		0.606 BSC	
D	—	—	0.104
E		0.050 BSC	
F	0.004	—	0.012
G	0.016	—	0.050
H	0.008	—	0.013
α	0°	—	8°

Symbol	Dimensions in mm		
	Min.	Nom.	Max.
A		10.30 BSC	
B		7.50 BSC	
C	0.31	—	0.51
C’		15.40 BSC	
D	—	—	2.65
E		1.27 BSC	
F	0.10	—	0.30
G	0.40	—	1.27
H	0.20	—	0.33
α	0°	—	8°

24-pin SSOP (150mil) Outline Dimensions

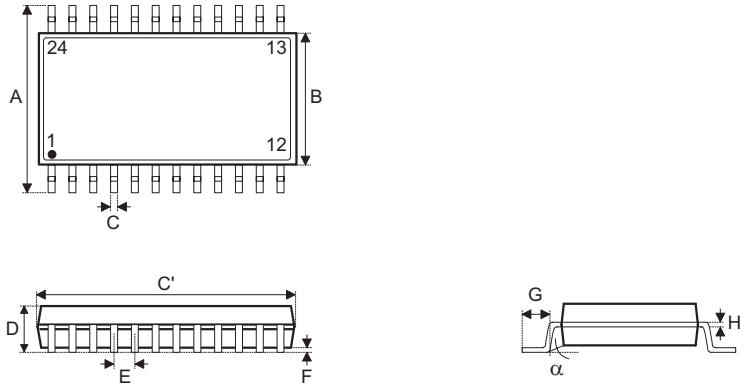

Symbol	Dimensions in inch		
	Min.	Nom.	Max.
A		0.236 BSC	
B		0.154 BSC	
C	0.008	—	0.012
C'		0.341 BSC	
D	—	—	0.069
E		0.025 BSC	
F	0.004	—	0.010
G	0.016	—	0.050
H	0.004	—	0.010
α	0°	—	8°

Symbol	Dimensions in mm		
	Min.	Nom.	Max.
A		6.00 BSC	
B		3.90 BSC	
C	0.20	—	0.30
C'		8.66 BSC	
D	—	—	1.75
E		0.635 BSC	
F	0.10	—	0.25
G	0.41	—	1.27
H	0.10	—	0.25
α	0°	—	8°

Copyright© 2026 by HOLTEK SEMICONDUCTOR INC. All Rights Reserved.

The information provided in this document has been produced with reasonable care and attention before publication, however, HOLTEK does not guarantee that the information is completely accurate. The information contained in this publication is provided for reference only and may be superseded by updates. HOLTEK disclaims any expressed, implied or statutory warranties, including but not limited to suitability for commercialization, satisfactory quality, specifications, characteristics, functions, fitness for a particular purpose, and non-infringement of any third-party's rights. HOLTEK disclaims all liability arising from the information and its application. In addition, HOLTEK does not recommend the use of HOLTEK's products where there is a risk of personal hazard due to malfunction or other reasons. HOLTEK hereby declares that it does not authorise the use of these products in life-saving, life-sustaining or safety critical components. Any use of HOLTEK's products in life-saving/sustaining or safety applications is entirely at the buyer's risk, and the buyer agrees to defend, indemnify and hold HOLTEK harmless from any damages, claims, suits, or expenses resulting from such use. The information provided in this document, including but not limited to the content, data, examples, materials, graphs, and trademarks, is the intellectual property of HOLTEK (and its licensors, where applicable) and is protected by copyright law and other intellectual property laws. No license, express or implied, to any intellectual property right, is granted by HOLTEK herein. HOLTEK reserves the right to revise the information described in the document at any time without prior notice. For the latest information, please contact us.