TMS320F28004x Real-Time Microcontrollers

1 Features

- TMS320C28x 32-bit CPU
  - 100MHz
  - IEEE 754 single-precision Floating-Point Unit (FPU)
  - Trigonometric Math Unit (TMU)
    - 3×-cycle to 4×-cycle improvement for common trigonometric functions versus software libraries
    - 13-cycle Park transform
  - Viterbi/Complex Math Unit (VCU-I)
  - Ten hardware breakpoints (with ERAD)
- Programmable Control Law Accelerator (CLA)
  - 100MHz
  - IEEE 754 single-precision floating-point instructions
  - Executes code independently of main CPU
- On-chip memory
  - 256KB (128KW) of flash (ECC-protected) across two independent banks
  - 100KB (50KW) of RAM (ECC-protected or parity-protected)
  - Dual-zone security supporting third-party development
  - Unique Identification (UID) number
- Clock and system control
  - Two internal zero-pin 10MHz oscillators
  - On-chip crystal oscillator and external clock input
  - Windowed watchdog timer module
  - Missing clock detection circuitry
- 1.2V core, 3.3V I/O design
  - Internal VREG or DC-DC for 1.2V generation allows for single-supply designs
  - Brownout reset (BOR) circuit
- System peripherals
  - 6-channel Direct Memory Access (DMA) controller
  - 40 individually programmable multiplexed General-Purpose Input/Output (GPIO) pins
  - 21 digital inputs on analog pins
  - Enhanced Peripheral Interrupt Expansion (ePIE) module
  - Multiple low-power mode (LPM) support with external wakeup
  - Embedded Real-time Analysis and Diagnostic (ERAD)
- Communications peripherals
  - One Power-Management Bus (PMBus) interface
  - One Inter-integrated Circuit (I2C) interface (pin-bootable)
  - Two Controller Area Network (CAN) bus ports (pin-bootable)
  - Two Serial Peripheral Interface (SPI) ports (pin-bootable)
  - Two UART-Compatible Serial Communication Interfaces (SCIs) (pin-bootable)
  - One UART-Compatible Local Interconnect Network (LIN)
  - One Fast Serial Interface (FSI) with a transmitter and receiver
- Analog system
  - Three 3.45MSPS, 12-bit Analog-to-Digital Converters (ADCs)
    - Up to 21 external channels
    - Four integrated post-processing blocks (PPBs) per ADC
  - Seven windowed comparators (CMPSS) with 12-bit reference Digital-to-Analog Converters (DACs)
    - Digital glitch filters
  - Two 12-bit buffered DAC outputs
  - Seven Programmable Gain Amplifiers (PGAs)
    - Programmable gain settings: 3, 6, 12, 24
    - Programmable output filtering
- Enhanced control peripherals
  - 16 ePWM channels with high-resolution capability (150ps resolution)
    - Integrated dead-band support with high resolution
    - Integrated hardware trip zones (TZs)
  - Seven Enhanced Capture (eCAP) modules
    - High-resolution Capture (HRCAP) available on two modules
  - Two Enhanced Quadrature Encoder Pulse (eQEP) modules with support for CW/CCW operation modes
  - Four Sigma-Delta Filter Module (SDFM) input channels (two parallel filters per channel)
    - Standard SDFM data filtering
    - Comparator filter for fast action for overvalue or undervalue condition
- Configurable Logic Block (CLB)
  - Augments existing peripheral capability
  - Supports position manager solutions

An IMPORTANT NOTICE at the end of this data sheet addresses availability, warranty, changes, use in safety-critical applications, intellectual property matters and other important disclaimers. PRODUCTION DATA.

- InstaSPIN-FOC™
  - Sensorless field-oriented control (FOC) with FAST™ software encoder
  - Library in on-chip ROM memory
- Functional Safety-Compliant [1]
  - Developed for functional safety applications
  - Documentation available to aid ISO 26262 and IEC 61508 system design
  - Systematic capability up to ASIL D and SIL 3
  - Hardware integrity up to ASIL B
- Safety-related certification[2]
  - ISO 26262 certification up to ASIL B by TÜV SÜD
- Package options:
  - 100-pin Low-profile Quad Flatpack (LQFP) [PZ suffix]
  - 64-pin LQFP [PM suffix]
  - 56-pin Very Thin Quad Flatpack No-lead (VQFN) [RSH suffix]
- Temperature options:
  - S: –40°C to 125°C junction
  - Q: –40°C to 125°C free-air (AEC Q100 qualification for automotive applications)

2 Applications

- Medium/short range radar
- Air conditioner outdoor unit
- Door operator drive control
- Automated sorting equipment
- CNC control
- Textile machine
- Welding machine
- AC charging (pile) station
- DC charging (pile) station
- EV charging station power module
- Wireless vehicle charging module
- Energy storage power conversion system (PCS)
- Central inverter
- Solar power optimizer
- String inverter
- DC/DC converter
- Inverter & motor control
- On-board (OBC) & wireless charger
- AC drive control module
- AC drive power stage module
- Linear motor power stage
- Servo drive control module
- AC-input BLDC motor drive
- DC-input BLDC motor drive
- Industrial AC-DC
- Three phase UPS
- Merchant network & server PSU
- Merchant telecom rectifiers

3 Description

C2000™ 32-bit microcontrollers are optimized for processing, sensing, and actuation to improve closed-loop performance in real-time control applications such as industrial motor drives; solar inverters and digital power; electrical vehicles and transportation; motor control; and sensing and signal processing.

The TMS320F28004x (F28004x) is a powerful 32-bit floating-point microcontroller unit (MCU) that lets designers incorporate crucial control peripherals, differentiated analog, and nonvolatile memory on a single device.

The real-time control subsystem is based on TI's 32-bit C28x CPU, which provides 100MHz of signal processing performance. The C28x CPU is further boosted by the new TMU extended instruction set, which enables fast execution of algorithms with trigonometric operations commonly found in transforms and torque loop calculations; and the VCU-I extended instruction set, which reduces the latency for complex math operations commonly found in encoded applications.

The CLA allows significant offloading of common tasks from the main C28x CPU. The CLA is an independent 32-bit floating-point math accelerator that executes in parallel with the CPU. Additionally, the CLA has its own dedicated memory resources and it can directly access the key peripherals that are required in a typical control system. Support of a subset of ANSI C is standard, as are key features like hardware breakpoints and hardware task-switching.

The F28004x supports up to 256KB (128KW) of flash memory divided into two 128KB (64KW) banks, which enables programming and execution in parallel. Up to 100KB (50KW) of on-chip SRAM is also available in

[1] Refer to the *Functional Safety Manual for TMS320F28004x* and the TÜV *certification* for the exact part numbers that are Functional Safety-Compliant or Functional Safety Quality-Managed.
[2] Refer to the *Functional Safety Manual for TMS320F28004x* and the TÜV *certification* for the exact part numbers that are Functional Safety-Compliant or Functional Safety Quality-Managed.

Copyright © 2026 Texas Instruments Incorporated

blocks of 4KB (2KW) and 16KB (8KW) for efficient system partitioning. Flash ECC, SRAM ECC/parity, and dual-zone security are also supported.

High-performance analog blocks are integrated on the F28004x MCU to further enable system consolidation. Three separate 12-bit ADCs provide precise and efficient management of multiple analog signals, which ultimately boosts system throughput. Seven PGAs on the analog front end enable on-chip voltage scaling before conversion. Seven analog comparator modules provide continuous monitoring of input voltage levels for trip conditions.

The TMS320C2000™ microcontrollers contain industry-leading control peripherals with frequency-independent ePWM/HRPWM and eCAP allow for a best-in-class level of control to the system. The built-in 4-channel SDFM allows for seamless integration of an oversampling sigma-delta modulator across an isolation barrier.

Connectivity is supported through various industry-standard communication ports (such as SPI, SCI, I2C, LIN, and CAN) and offers multiple muxing options for optimal signal placement in a variety of applications. New to the C2000 platform is the fully compliant PMBus. Additionally, in an industry first, the FSI enables high-speed, robust communication to complement the rich set of peripherals that are embedded in the device.

A specially enabled device variant, TMS320F28004xC, allows access to the Configurable Logic Block (CLB) for additional interfacing features and allows access to the secure ROM, which includes a library to enable InstaSPIN-FOC™. See Device Comparison for more information.

The Embedded Real-Time Analysis and Diagnostic (ERAD) module enhances the debug and system analysis capabilities of the device by providing additional hardware breakpoints and counters for profiling.

Want to learn more about features that make C2000 Real-Time MCUs the right choice for your real-time control system? Check out *The Essential Guide for Developing With C2000™ Real-Time Microcontrollers* and visit the C2000™ real-time control MCUs page.

The *Getting Started With C2000™ Real-Time Control Microcontrollers (MCUs) Getting Started Guide* covers all aspects of development with C2000 devices from hardware to support resources. In addition to key reference documents, each section provides relevant links and resources to further expand on the information covered.

Ready to get started? Check out the TMDSCNCD280049C or the LAUNCHXL-F280049C evaluation boards and download C2000Ware.

Device Information

PART NUMBER(1)	CONTROL LAW ACCELERATOR (CLA)	CONFIGURABLE LOGIC BLOCK (CLB)	FLASH SIZE
TMS320F280049C	Yes	Yes	256KB
TMS320F280048C			
TMS320F280049		–	
TMS320F280048			
TMS320F280045	–	Yes	128KB
TMS320F280041C			
TMS320F280040C			
TMS320F280041		–	
TMS320F280040			

(1) For more information on these devices, see the Device Comparison table.

Copyright © 2026 Texas Instruments Incorporated

Table 3-1. Functional Safety-Compliant Part Numbers

PART NUMBER(1)
F280048CPMQR
F280048PMQR
F280049CPZQR
F280049PZQR
F280049PZQ

(1) Part numbers not listed in the table above are Functional Safety Quality-Managed (FS-QM).

Copyright © 2026 Texas Instruments Incorporated

3.1 Functional Block Diagram

Functional Block Diagram shows the CPU system and associated peripherals.

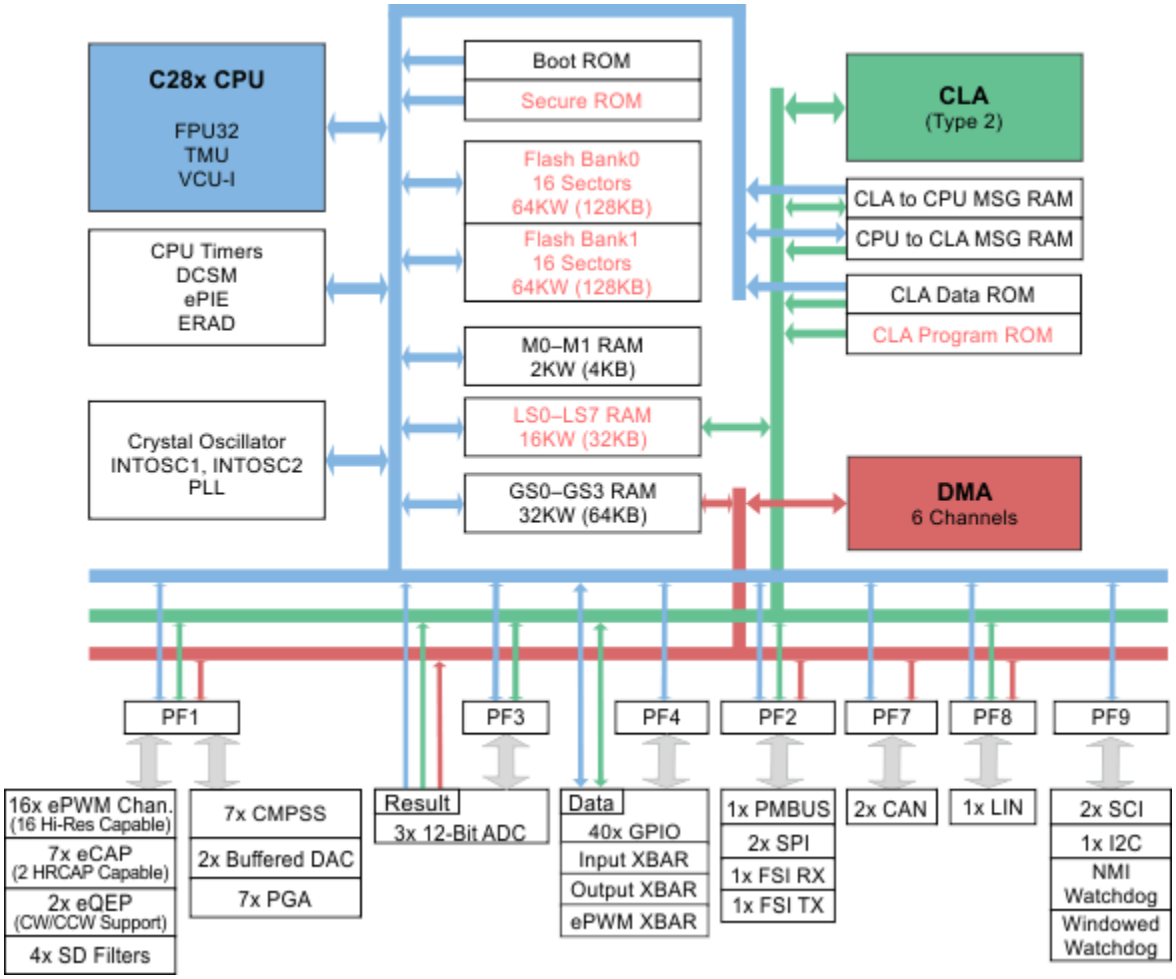

A. Secure memories are shown in red.

Figure 3-1. Functional Block Diagram

Table of Contents

1 Features....1
2 Applications....2
3 Description....2
3.1 Functional Block Diagram....5
4 Device Comparison....7
4.1 Related Products....9
5 Pin Configuration and Functions....10
5.1 Pin Diagrams....10
5.2 Pin Attributes....14
5.3 Signal Descriptions....29
5.4 Pin Multiplexing....41
5.5 Pins With Internal Pullup and Pulldown....54
5.6 Connections for Unused Pins....55
6 Specifications....57
6.1 Absolute Maximum Ratings....57
6.2 ESD Ratings – Commercial....57
6.3 ESD Ratings – Automotive....58
6.4 Recommended Operating Conditions....58
6.5 Power Consumption Summary....60
6.6 Electrical Characteristics....66
6.7 Thermal Resistance Characteristics....67
6.8 Thermal Design Considerations....69
6.9 System....70
6.10 Analog Peripherals....111
6.11 Control Peripherals....146
6.12 Communications Peripherals....168
7 Detailed Description....202
7.1 Overview....202
7.2 Functional Block Diagram....203
7.3 Memory....204
7.4 Identification....211
7.5 Bus Architecture – Peripheral Connectivity....212
7.6 C28x Processor....213
7.7 Control Law Accelerator (CLA)....216
7.8 Direct Memory Access (DMA)....218
7.9 Boot ROM and Peripheral Booting....219
7.10 Dual Code Security Module....224
7.11 Watchdog....225
7.12 Configurable Logic Block (CLB)....226
7.13 Functional Safety....228
8 Applications, Implementation, and Layout....229
8.1 Key Device Features....229
8.2 Application Information....232
9 Device and Documentation Support....245
9.1 Device and Development Support Tool Nomenclature....245
9.2 Markings....246
9.3 Tools and Software....248
9.4 Documentation Support....250
9.5 Support Resources....251
9.6 Trademarks....251
9.7 Electrostatic Discharge Caution....251
9.8 Glossary....251
10 Revision History....252
11 Mechanical, Packaging, and Orderable Information....253
11.1 Packaging Information....253

Copyright © 2026 Texas Instruments Incorporated

4 Device Comparison

Table 4-1 lists the features of the TMS320F28004x devices.

Table 4-1. Device Comparison

FEATURE[1]		F280049 F280049-Q1 F280049C F280049C-Q1	F280048-Q1 F280048C-Q1	F280045	F280041 F280041-Q1 F280041C F280041C-Q1	F280040-Q1 F280040C-Q1
PROCESSOR AND ACCELERATORS						
C28x	Frequency (MHz)	100				
	FPU	Yes				
	VCU-I	Yes				
	TMU – Type 0	Yes				
CLA – Type 2	Available	Yes		No		
	Frequency (MHz)	100		–		
6-Channel DMA – Type 0		Yes				
MEMORY						
Flash		256KB (128KW)			128KB (64KW)	
RAM	Dedicated and Local Shared RAM	36KB (18KW)				
	Global Shared RAM	64KB (32KW)				
	TOTAL RAM	**100KB (50KW)**				
Code security for on-chip flash, RAM, and OTP blocks		Yes				
Boot ROM		Yes				
User-configurable DCSM OTP		4KB (2KW)				
SYSTEM [2]						
Configurable Logic Block (CLB)		4 tiles (F280049C, F280049C-Q1)	4 tiles (F280048C-Q1)	–	4 tiles (F280041C, F280041C-Q1)	4 tiles (F280040C-Q1)
InstaSPIN-FOC™		F280049C, F280049C-Q1	F280048C-Q1	–	F280041C, F280041C-Q1	F280040C-Q1
32-bit CPU timers		3				
Watchdog timers		1				
Nonmaskable Interrupt Watchdog (NMIWD) timers		1				
Crystal oscillator/External clock input		1				
0-pin internal oscillator		2				
GPIO pins	100-pin PZ	40	–	40	40	–
	64-pin PM	26	24	26	26	24
	56-pin RSH	25	–	25	25	–
AIO inputs	100-pin PZ	21				
	64-pin PM	14				
	56-pin RSH	12				
External interrupts		5				
ANALOG PERIPHERALS						
ADC 12-bit	Number of ADCs	3				
	MSPS	3.45				
	Conversion Time (ns)[3]	290				
ADC channels (single-ended)	100-pin PZ	21				
	64-pin PM	14				
	56-pin RSH	12				
ADC channels (from PGA)	100-pin PZ	7				
	64-pin PM	5				
	56-pin RSH	4				
Temperature sensor		1				

Copyright © 2026 Texas Instruments Incorporated

Table 4-1. Device Comparison (continued)

FEATURE[1]		F280049 F280049-Q1 F280049C F280049C-Q1	F280048-Q1 F280048C-Q1	F280045	F280041 F280041-Q1 F280041C F280041C-Q1	F280040-Q1 F280040C-Q1
Buffered DAC		2				
CMPSS (each CMPSS has two comparators and two internal DACs)	100-pin PZ	7				
	64-pin PM	6				
	56-pin RSH	5				
PGAs (Gain Settings: 3, 6, 12, 24)	100-pin PZ	7				
	64-pin PM	5				
	56-pin RSH	4				
CONTROL PERIPHERALS [4]						
eCAP/HRCAP modules – Type 1		7 (2 with HRCAP capability)				
ePWM/HRPWM channels – Type 4		16				
eQEP modules – Type 1	100-pin PZ	2				
	64-pin PM	1				
	56-pin RSH	1				
SDFM channels – Type 1	100-pin PZ	4				
	64-pin PM	2				
	56-pin RSH	2				
COMMUNICATION PERIPHERALS [4]						
CAN – Type 0		2				
I2C – Type 1		1				
SCI – Type 0 (UART-compatible)		2				
SPI – Type 2		2				
LIN – Type 1 (UART-compatible)		1				
PMBus – Type 0		1				
FSI – Type 0		1				
PACKAGE OPTIONS, TEMPERATURE, AND QUALIFICATION						
Junction Temperature (T_J)		S: –40°C to 125°C				
Free-Air Temperature (T_A)		Q: –40°C to 125°C[5]				
Package options	100-pin PZ	F280049 F280049-Q1 F280049C F280049C-Q1	–	F280045	F280041 F280041-Q1 F280041C F280041C-Q1	–
	64-pin PM	F280049 F280049C	F280048-Q1 F280048C-Q1	F280045	F280041 F280041C	F280040-Q1 F280040C-Q1
	56-pin RSH	F280049 F280049C	–	F280045	F280041 F280041C	–

(1) A type change represents a major functional feature difference in a peripheral module. Within a peripheral type, there may be minor differences between devices that do not affect the basic functionality of the module. For more information, see the *C2000 Real-Time Control Peripherals Reference Guide*.
(2) For more information about InstaSPIN-FOC™ devices, see Section 9.4 for a list of InstaSPIN Technical Reference Manuals.
(3) Time between start of sample-and-hold window to start of sample-and-hold window of the next conversion.
(4) For devices that are available in more than one package, the peripheral count listed in the smaller package is reduced because the smaller package has less device pins available. The number of peripherals internally present on the device is not reduced compared to the largest package offered within a part number. See Section 5 to identify which peripheral instances are accessible on pins in the smaller package.
(5) The letter Q refers to AEC Q100 qualification for automotive applications.

Copyright © 2026 Texas Instruments Incorporated

4.1 Related Products

Original devices:

TMS320F2802x Real-Time Microcontrollers
The F2802x series offers the lowest pin-count and Flash memory size options. InstaSPIN-FOC™ versions are available.

TMS320F2803x Real-Time Microcontrollers
The F2803x series increases the pin-count and memory size options. The F2803x series also introduces the parallel control law accelerator (CLA) option.

TMS320F2805x Real-Time Microcontrollers
The F2805x series is similar to the F2803x series but adds on-chip programmable gain amplifiers (PGAs). InstaSPIN-FOC and InstaSPIN-MOTION™ versions are available.

TMS320F2806x Real-Time Microcontrollers
The F2806x series is the first to include a floating-point unit (FPU). The F2806x series also increases the pin-count, memory size options, and the quantity of peripherals. InstaSPIN-FOC™ and InstaSPIN-MOTION™ versions are available.

Newest devices:

TMS320F2807x Real-Time Microcontrollers
The F2807x series offers the most performance, largest pin counts, flash memory sizes, and peripheral options. The F2807x series includes the latest generation of accelerators, ePWM peripherals, and analog technology.

TMS320F28004x Real-Time Microcontrollers
The F28004x series is a reduced version of the F2807x series with the latest generational enhancements. The F28004x series is the best roadmap option for those using the F2806x series. InstaSPIN-FOC and configurable logic block (CLB) versions are available.

TMS320F28003x Real-Time Microcontrollers
The F28003x series builds upon the F28002x series offering higher frequency, more memory, and more peripheral options. CAN-FD and security features are introduced from F2838x series.

TMS320F28002x Real-Time Microcontrollers
The F28002x series is a reduced version of the F28004x series with the latest generational enhancements.

Migration Guides:

Migration Between TMS320F28004x and TMS320F28002x describes the hardware and software differences to be aware of when moving between F28004x and F28002x C2000™ MCUs.

Migration Between TMS320F28004x and TMS320F28003x describes the hardware and software differences to be aware of when moving between F28004x and F28003x C2000™ MCUs.

Copyright © 2026 Texas Instruments Incorporated

5 Pin Configuration and Functions

5.1 Pin Diagrams

Figure 5-1 shows the pin assignments on the 100-pin PZ Low-Profile Quad Flatpack. Figure 5-2 shows the pin assignments on the 64-Pin PM Low-Profile Quad Flatpack. Figure 5-3 shows the pin assignments on the 64-Pin PM Low-Profile Quad Flatpack for the Q-temperature device. Figure 5-4 shows the pin assignments on the 56-Pin RSH Very Thin Quad Flatpack No-Lead.

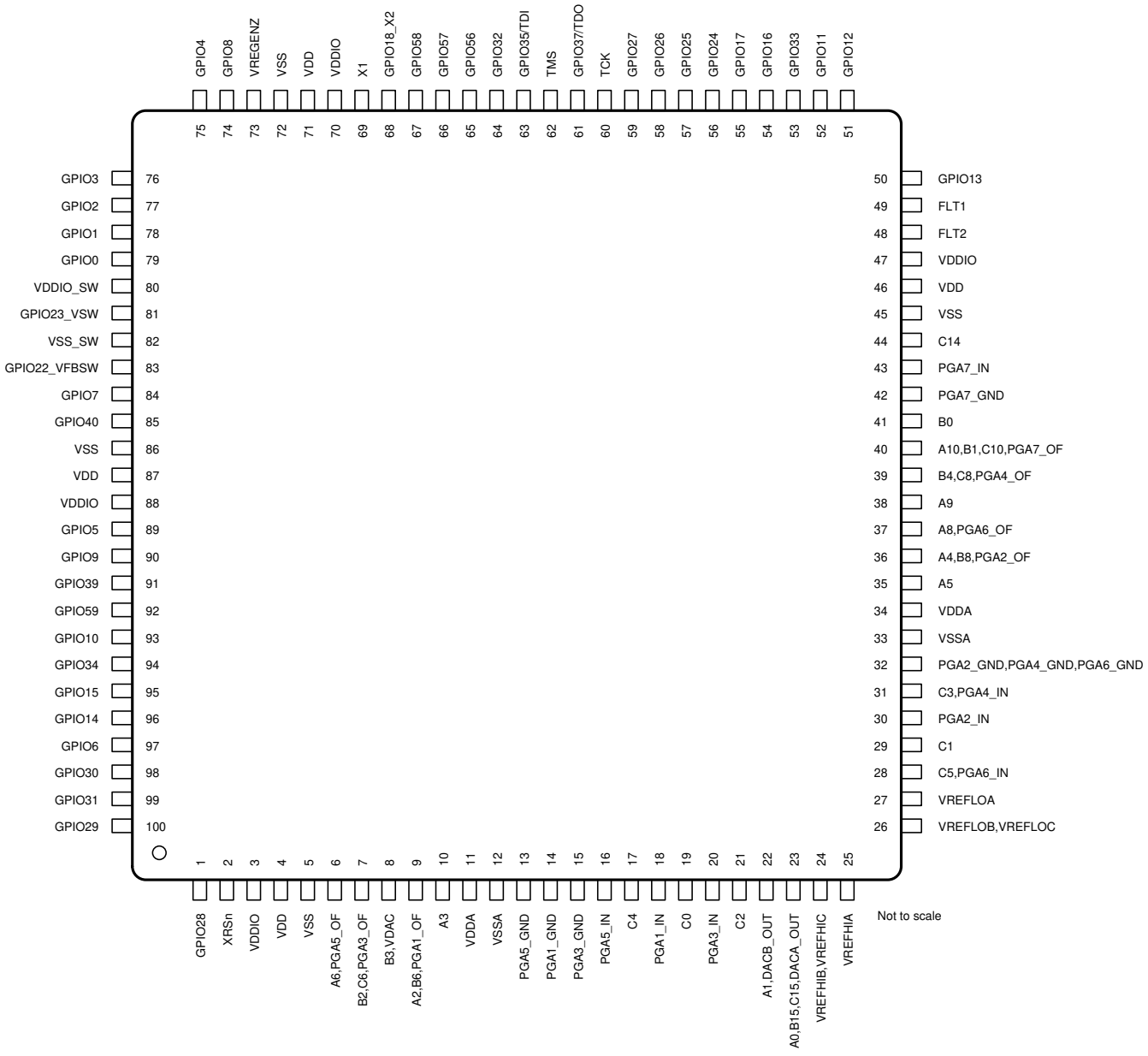

A. Only the GPIO function is shown on GPIO terminals. See Section 5.3 for the complete, muxed signal name.

Figure 5-1. 100-Pin PZ Low-Profile Quad Flatpack (Top View)

Copyright © 2026 Texas Instruments Incorporated

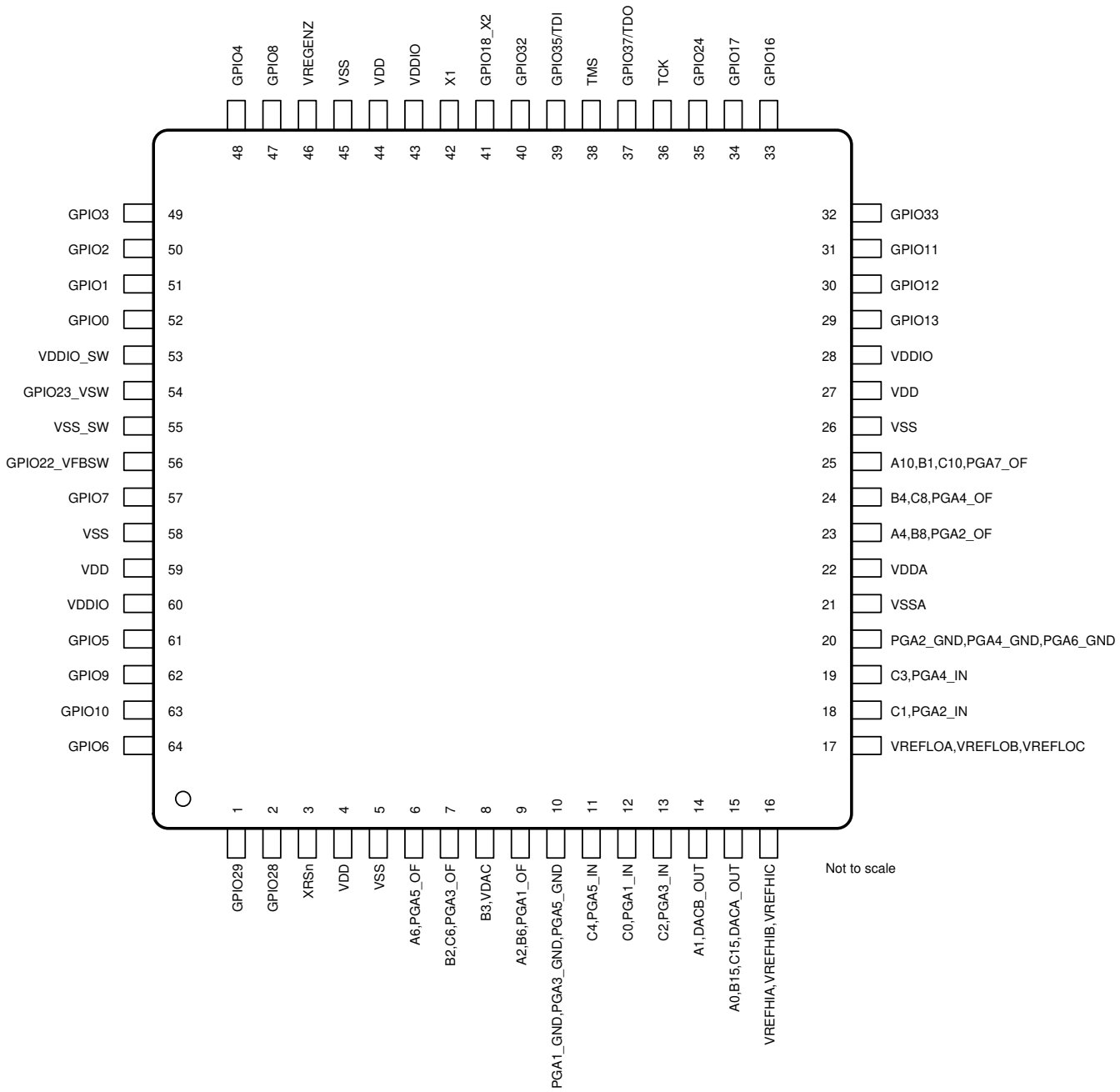

A. Only the GPIO function is shown on GPIO terminals. See Section 5.3 for the complete, muxed signal name.

Figure 5-2. F280049/C/M, F280045, F280041/C 64-Pin PM Low-Profile Quad Flatpack (Top View)

Copyright © 2026 Texas Instruments Incorporated

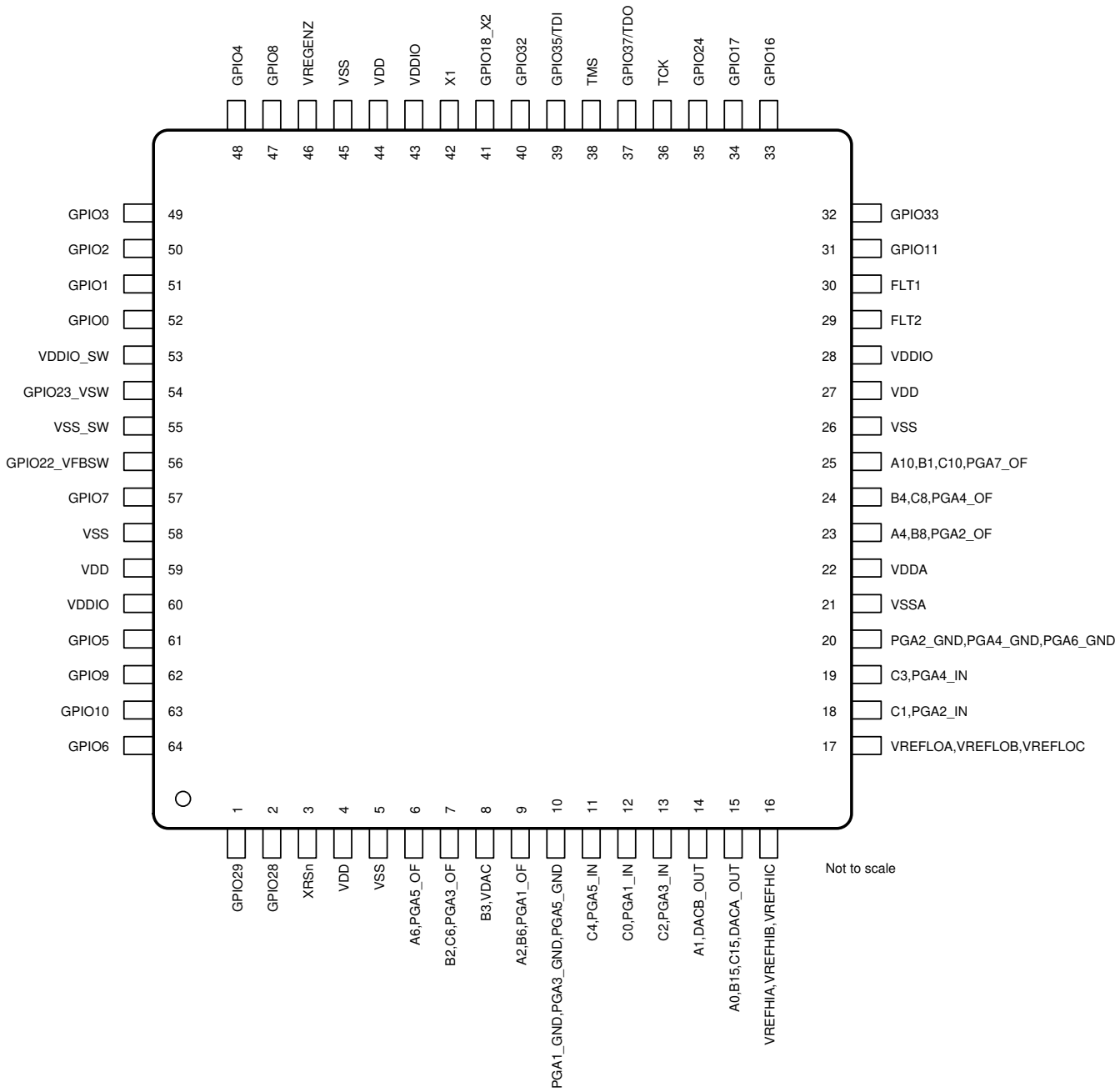

A. Only the GPIO function is shown on GPIO terminals. See Section 5.3 for the complete, muxed signal name.

Figure 5-3. F280048/C, F280040/C 64-Pin PM Low-Profile Quad Flatpack — Q-Temperature (Top View)

Copyright © 2026 Texas Instruments Incorporated

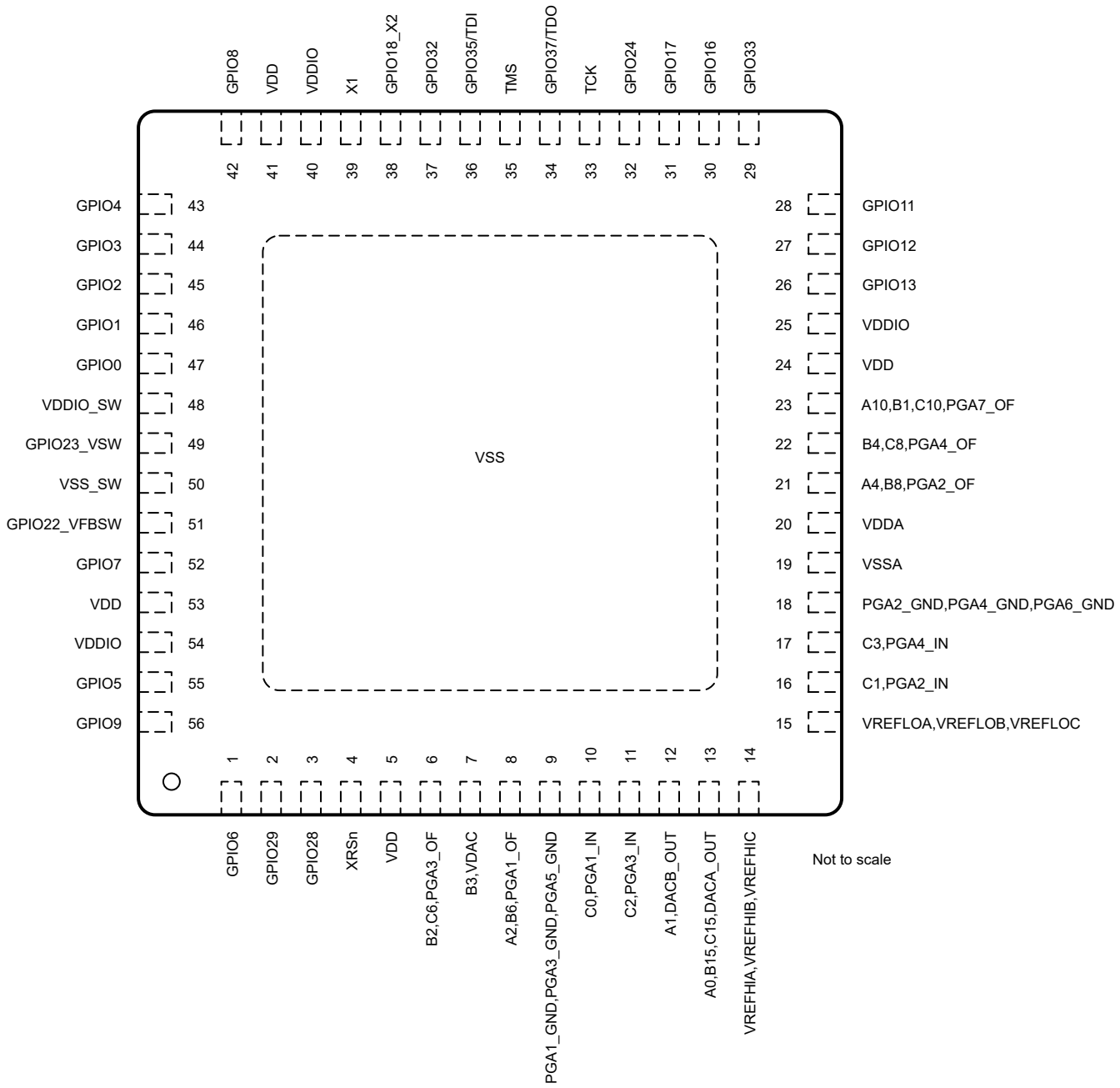

A. Only the GPIO function is shown on GPIO terminals. See Section 5.3 for the complete, muxed signal name.

B. This figure shows the top view of the 56-pin RSH package. The terminals are actually on the bottom side of the package. See Section 11 for the 56-pin RSH mechanical drawing.

Figure 5-4. 56-Pin RSH Very Thin Quad Flatpack No-Lead (Top View)

Copyright © 2026 Texas Instruments Incorporated

5.2 Pin Attributes

Table 5-1. Pin Attributes

SIGNAL NAME	MUX POSITION	100 PZ	64 PMQ	64 PM	56 RSH	PIN TYPE	DESCRIPTION
ANALOG							
A0		23	15	15	13	I	ADC-A Input 0
B15						I	ADC-B Input 15
C15						I	ADC-C Input 15
DACA_OUT						O	Buffered DAC-A Output
AIO231						I	Digital Input-231 on ADC Pin
A1		22	14	14	12	I	ADC-A Input 1
DACB_OUT						O	Buffered DAC-B Output
AIO232						I	Digital Input-232 on ADC Pin
A10		40	25	25	23	I	ADC-A Input 10
B1						I	ADC-B Input 1
C10						I	ADC-C Input 10
PGA7_OF						O	PGA-7 Output Filter (Optional)
CMP7_HP0						I	CMPSS-7 High Comparator Positive Input 0
CMP7_LP0						I	CMPSS-7 Low Comparator Positive Input 0
AIO230						I	Digital Input-230 on ADC Pin
A2		9	9	9	8	I	ADC-A Input 2
B6						I	ADC-B Input 6
PGA1_OF						O	PGA-1 Output Filter (Optional)
CMP1_HP0						I	CMPSS-1 High Comparator Positive Input 0
CMP1_LP0						I	CMPSS-1 Low Comparator Positive Input 0
AIO224						I	Digital Input-224 on ADC Pin
A3		10				I	ADC-A Input 3
CMP1_HP3						I	CMPSS-1 High Comparator Positive Input 3
CMP1_HN0						I	CMPSS-1 High Comparator Negative Input 0
CMP1_LP3						I	CMPSS-1 Low Comparator Positive Input 3
CMP1_LN0						I	CMPSS-1 Low Comparator Negative Input 0
AIO233						I	Digital Input-233 on ADC Pin
A4		36	23	23	21	I	ADC-A Input 4
B8						I	ADC-B Input 8
PGA2_OF						O	PGA-2 Output Filter (Optional)
CMP2_HP0						I	CMPSS-2 High Comparator Positive Input 0
CMP2_LP0						I	CMPSS-2 Low Comparator Positive Input 0
AIO225						I	Digital Input-225 on ADC Pin
A5		35				I	ADC-A Input 5
CMP2_HP3						I	CMPSS-2 High Comparator Positive Input 3
CMP2_HN0						I	CMPSS-2 High Comparator Negative Input 0
CMP2_LP3						I	CMPSS-2 Low Comparator Positive Input 3
CMP2_LN0						I	CMPSS-2 Low Comparator Negative Input 0
AIO234						I	Digital Input-234 on ADC Pin

Copyright © 2026 Texas Instruments Incorporated

Table 5-1. Pin Attributes (continued)

SIGNAL NAME	MUX POSITION	100 PZ	64 PMQ	64 PM	56 RSH	PIN TYPE	DESCRIPTION
A6						I	ADC-A Input 6
PGA5_OF						O	PGA-5 Output Filter (Optional)
CMP5_HP0		6	6	6		I	CMPSS-5 High Comparator Positive Input 0
CMP5_LP0						I	CMPSS-5 Low Comparator Positive Input 0
AIO228						I	Digital Input-228 on ADC Pin
A8						I	ADC-A Input 8
PGA6_OF						O	PGA-6 Output Filter (Optional)
CMP6_HP0		37				I	CMPSS-6 High Comparator Positive Input 0
CMP6_LP0						I	CMPSS-6 Low Comparator Positive Input 0
AIO229						I	Digital Input-229 on ADC Pin
A9						I	ADC-A Input 9
CMP6_HP3						I	CMPSS-6 High Comparator Positive Input 3
CMP6_HN0		38				I	CMPSS-6 High Comparator Negative Input 0
CMP6_LP3						I	CMPSS-6 Low Comparator Positive Input 3
CMP6_LN0						I	CMPSS-6 Low Comparator Negative Input 0
AIO236						I	Digital Input-236 on ADC Pin
B0						I	ADC-B Input 0
CMP7_HP3						I	CMPSS-7 High Comparator Positive Input 3
CMP7_HN0		41				I	CMPSS-7 High Comparator Negative Input 0
CMP7_LP3						I	CMPSS-7 Low Comparator Positive Input 3
CMP7_LN0						I	CMPSS-7 Low Comparator Negative Input 0
AIO241						I	Digital Input-241 on ADC Pin
B2						I	ADC-B Input 2
C6						I	ADC-C Input 6
PGA3_OF		7	7	7	6	O	PGA-3 Output Filter (Optional)
CMP3_HP0						I	CMPSS-3 High Comparator Positive Input 0
CMP3_LP0						I	CMPSS-3 Low Comparator Positive Input 0
AIO226						I	Digital Input-226 on ADC Pin
B3						I	ADC-B Input 3
VDAC		8	8	8	7	I	Optional external reference voltage for on-chip DACs. There is a 100-pF capacitor to VSSA on this pin whether used for ADC input or DAC reference which cannot be disabled. If this pin is being used as a reference for the on-chip DACs, place at least a 1-µF capacitor on this pin.
CMP3_HP3						I	CMPSS-3 High Comparator Positive Input 3
CMP3_HN0						I	CMPSS-3 High Comparator Negative Input 0
CMP3_LP3						I	CMPSS-3 Low Comparator Positive Input 3
CMP3_LN0						I	CMPSS-3 Low Comparator Negative Input 0
AIO242						I	Digital Input-242 on ADC Pin
B4						I	ADC-B Input 4
C8						I	ADC-C Input 8
PGA4_OF		39	24	24	22	O	PGA-4 Output Filter (Optional)
CMP4_HP0						I	CMPSS-4 High Comparator Positive Input 0
CMP4_LP0						I	CMPSS-4 Low Comparator Positive Input 0
AIO227						I	Digital Input-227 on ADC Pin

Copyright © 2026 Texas Instruments Incorporated

Table 5-1. Pin Attributes (continued)

SIGNAL NAME	MUX POSITION	100 PZ	64 PMQ	64 PM	56 RSH	PIN TYPE	DESCRIPTION
C0		19	12	12	10	I	ADC-C Input 0
CMP1_HP1						I	CMPSS-1 High Comparator Positive Input 1
CMP1_HN1						I	CMPSS-1 High Comparator Negative Input 1
CMP1_LP1						I	CMPSS-1 Low Comparator Positive Input 1
CMP1_LN1						I	CMPSS-1 Low Comparator Negative Input 1
AIO237						I	Digital Input-237 on ADC Pin
C1		29	18	18	16	I	ADC-C Input 1
CMP2_HP1						I	CMPSS-2 High Comparator Positive Input 1
CMP2_HN1						I	CMPSS-2 High Comparator Negative Input 1
CMP2_LP1						I	CMPSS-2 Low Comparator Positive Input 1
CMP2_LN1						I	CMPSS-2 Low Comparator Negative Input 1
AIO238						I	Digital Input-238 on ADC Pin
C14		44				I	ADC-C Input 14
CMP7_HP1						I	CMPSS-7 High Comparator Positive Input 1
CMP7_HN1						I	CMPSS-7 High Comparator Negative Input 1
CMP7_LP1						I	CMPSS-7 Low Comparator Positive Input 1
CMP7_LN1						I	CMPSS-7 Low Comparator Negative Input 1
AIO246						I	Digital Input-246 on ADC Pin
C2		21	13	13	11	I	ADC-C Input 2
CMP3_HP1						I	CMPSS-3 High Comparator Positive Input 1
CMP3_HN1						I	CMPSS-3 High Comparator Negative Input 1
CMP3_LP1						I	CMPSS-3 Low Comparator Positive Input 1
CMP3_LN1						I	CMPSS-3 Low Comparator Negative Input 1
AIO244						I	Digital Input-244 on ADC Pin
C3		31	19	19	17	I	ADC-C Input 3
CMP4_HP1						I	CMPSS-4 High Comparator Positive Input 1
CMP4_HN1						I	CMPSS-4 High Comparator Negative Input 1
CMP4_LP1						I	CMPSS-4 Low Comparator Positive Input 1
CMP4_LN1						I	CMPSS-4 Low Comparator Negative Input 1
AIO245						I	Digital Input-245 on ADC Pin
C4		17	11	11		I	ADC-C Input 4
CMP5_HP1						I	CMPSS-5 High Comparator Positive Input 1
CMP5_HN1						I	CMPSS-5 High Comparator Negative Input 1
CMP5_LP1						I	CMPSS-5 Low Comparator Positive Input 1
CMP5_LN1						I	CMPSS-5 Low Comparator Negative Input 1
AIO239						I	Digital Input-239 on ADC Pin
C5		28				I	ADC-C Input 5
CMP6_HP1						I	CMPSS-6 High Comparator Positive Input 1
CMP6_HN1						I	CMPSS-6 High Comparator Negative Input 1
CMP6_LP1						I	CMPSS-6 Low Comparator Positive Input 1
CMP6_LN1						I	CMPSS-6 Low Comparator Negative Input 1
AIO240						I	Digital Input-240 on ADC Pin
PGA1_GND		14	10	10	9	I	PGA-1 Ground

Copyright © 2026 Texas Instruments Incorporated

Table 5-1. Pin Attributes (continued)

SIGNAL NAME	MUX POSITION	100 PZ	64 PMQ	64 PM	56 RSH	PIN TYPE	DESCRIPTION
PGA1_IN						I	PGA-1 Input
CMP1_HP2		18	12	12	10	I	CMPSS-1 High Comparator Positive Input 2
CMP1_LP2						I	CMPSS-1 Low Comparator Positive Input 2
PGA2_GND		32	20	20	18	I	PGA-2 Ground
PGA2_IN						I	PGA-2 Input
CMP2_HP2		30	18	18	16	I	CMPSS-2 High Comparator Positive Input 2
CMP2_LP2						I	CMPSS-2 Low Comparator Positive Input 2
PGA3_GND		15	10	10	9	I	PGA-3 Ground
PGA3_IN						I	PGA-3 Input
CMP3_HP2		20	13	13	11	I	CMPSS-3 High Comparator Positive Input 2
CMP3_LP2						I	CMPSS-3 Low Comparator Positive Input 2
PGA4_GND		32	20	20	18	I	PGA-4 Ground
PGA4_IN						I	PGA-4 Input
CMP4_HP2		31	19	19	17	I	CMPSS-4 High Comparator Positive Input 2
CMP4_LP2						I	CMPSS-4 Low Comparator Positive Input 2
PGA5_GND		13	10	10	9	I	PGA-5 Ground
PGA5_IN						I	PGA-5 Input
CMP5_HP2		16	11	11		I	CMPSS-5 High Comparator Positive Input 2
CMP5_LP2						I	CMPSS-5 Low Comparator Positive Input 2
PGA6_GND		32	20	20	18	I	PGA-6 Ground
PGA6_IN						I	PGA-6 Input
CMP6_HP2		28				I	CMPSS-6 High Comparator Positive Input 2
CMP6_LP2						I	CMPSS-6 Low Comparator Positive Input 2
PGA7_GND		42				I	PGA-7 Ground
PGA7_IN						I	PGA-7 Input
CMP7_HP2		43				I	CMPSS-7 High Comparator Positive Input 2
CMP7_LP2						I	CMPSS-7 Low Comparator Positive Input 2
VREFHIA		25	16	16	14	I/O	ADC-A High Reference. In external reference mode, externally drive the high reference voltage onto this pin. In internal reference mode, a voltage is driven onto this pin by the device. In either mode, place at least a 2.2-µF capacitor on this pin. This capacitor should be placed as close to the device as possible between the VREFHIA and VREFLOA pins. Do not load this pin externally in either internal or external reference mode.
VREFHIB		24	16	16	14	I/O	ADC-B High Reference. In external reference mode, externally drive the high reference voltage onto this pin. In internal reference mode, a voltage is driven onto this pin by the device. In either mode, place at least a 2.2-µF capacitor on this pin. This capacitor should be placed as close to the device as possible between the VREFHIB and VREFLOB pins. Do not load this pin externally in either internal or external reference mode.
VREFHIC		24	16	16	14	I/O	ADC-C High Reference. In external reference mode, externally drive the high reference voltage onto this pin. In internal reference mode, a voltage is driven onto this pin by the device. In either mode, place at least a 2.2-µF capacitor on this pin. This capacitor should be placed as close to the device as possible between the VREFHIC and VREFLOC pins. Do not load this pin externally in either internal or external reference mode.

Copyright © 2026 Texas Instruments Incorporated

Table 5-1. Pin Attributes (continued)

SIGNAL NAME	MUX POSITION	100 PZ	64 PMQ	64 PM	56 RSH	PIN TYPE	DESCRIPTION
VREFLOA		27	17	17	15	I	ADC-A Low Reference
VREFLOB		26	17	17	15	I	ADC-B Low Reference
VREFLOC		26	17	17	15	I	ADC-C Low Reference

Copyright © 2026 Texas Instruments Incorporated

Table 5-1. Pin Attributes (continued)

SIGNAL NAME	MUX POSITION	100 PZ	64 PMQ	64 PM	56 RSH	PIN TYPE	DESCRIPTION
GPIO							
GPIO0	0, 4, 8, 12	79	52	52	47	I/O	General-Purpose Input Output 0
EPWM1_A	1					O	ePWM-1 Output A
I2CA_SDA	6					I/OD	I2C-A Open-Drain Bidirectional Data
GPIO1	0, 4, 8, 12	78	51	51	46	I/O	General-Purpose Input Output 1
EPWM1_B	1					O	ePWM-1 Output B
I2CA_SCL	6					I/OD	I2C-A Open-Drain Bidirectional Clock
GPIO2	0, 4, 8, 12	77	50	50	45	I/O	General-Purpose Input Output 2
EPWM2_A	1					O	ePWM-2 Output A
OUTPUTXBAR1	5					O	Output X-BAR Output 1
PMBUSA_SDA	6					I/OD	PMBus-A Open-Drain Bidirectional Data
SCIA_TX	9					O	SCI-A Transmit Data
FSIRXA_D1	10					I	FSIRX-A Optional Additional Data Input
GPIO3	0, 4, 8, 12	76	49	49	44	I/O	General-Purpose Input Output 3
EPWM2_B	1					O	ePWM-2 Output B
OUTPUTXBAR2	2, 5					O	Output X-BAR Output 2
PMBUSA_SCL	6					I/OD	PMBus-A Open-Drain Bidirectional Clock
SPIA_CLK	7					I/O	SPI-A Clock
SCIA_RX	9					I	SCI-A Receive Data
FSIRXA_D0	10					I	FSIRX-A Primary Data Input
GPIO4	0, 4, 8, 12	75	48	48	43	I/O	General-Purpose Input Output 4
EPWM3_A	1					O	ePWM-3 Output A
OUTPUTXBAR3	5					O	Output X-BAR Output 3
CANA_TX	6					O	CAN-A Transmit
FSIRXA_CLK	10					I	FSIRX-A Input Clock
GPIO5	0, 4, 8, 12	89	61	61	55	I/O	General-Purpose Input Output 5
EPWM3_B	1					O	ePWM-3 Output B
OUTPUTXBAR3	3					O	Output X-BAR Output 3
CANA_RX	6					I	CAN-A Receive
SPIA_STE	7					I/O	SPI-A Slave Transmit Enable (STE)
FSITXA_D1	9					O	FSITX-A Optional Additional Data Output
GPIO6	0, 4, 8, 12	97	64	64	1	I/O	General-Purpose Input Output 6
EPWM4_A	1					O	ePWM-4 Output A
OUTPUTXBAR4	2					O	Output X-BAR Output 4
SYNCOUT	3					O	External ePWM Synchronization Pulse
EQEP1_A	5					I	eQEP-1 Input A
CANB_TX	6					O	CAN-B Transmit
SPIB_SOMI	7					I/O	SPI-B Slave Out, Master In (SOMI)
FSITXA_D0	9					O	FSITX-A Primary Data Output

Copyright © 2026 Texas Instruments Incorporated

Table 5-1. Pin Attributes (continued)

SIGNAL NAME	MUX POSITION	100 PZ	64 PMQ	64 PM	56 RSH	PIN TYPE	DESCRIPTION
GPIO7	0, 4, 8, 12	84	57	57	52	I/O	General-Purpose Input Output 7
EPWM4_B	1					O	ePWM-4 Output B
OUTPUTXBAR5	3					O	Output X-BAR Output 5
EQEP1_B	5					I	eQEP-1 Input B
CANB_RX	6					I	CAN-B Receive
SPIB_SIMO	7					I/O	SPI-B Slave In, Master Out (SIMO)
FSITXA_CLK	9					O	FSITX-A Output Clock
GPIO8	0, 4, 8, 12	74	47	47	42	I/O	General-Purpose Input Output 8
EPWM5_A	1					O	ePWM-5 Output A
CANB_TX	2					O	CAN-B Transmit
ADCSOCAO	3					O	ADC Start of Conversion A Output for External ADC (from ePWM modules)
EQEP1_STROBE	5					I/O	eQEP-1 Strobe
SCIA_TX	6					O	SCI-A Transmit Data
SPIA_SIMO	7					I/O	SPI-A Slave In, Master Out (SIMO)
I2CA_SCL	9					I/OD	I2C-A Open-Drain Bidirectional Clock
FSITXA_D1	10					O	FSITX-A Optional Additional Data Output
GPIO9	0, 4, 8, 12	90	62	62	56	I/O	General-Purpose Input Output 9
EPWM5_B	1					O	ePWM-5 Output B
SCIB_TX	2					O	SCI-B Transmit Data
OUTPUTXBAR6	3					O	Output X-BAR Output 6
EQEP1_INDEX	5					I/O	eQEP-1 Index
SCIA_RX	6					I	SCI-A Receive Data
SPIA_CLK	7					I/O	SPI-A Clock
FSITXA_D0	10					O	FSITX-A Primary Data Output
GPIO10	0, 4, 8, 12	93	63	63		I/O	General-Purpose Input Output 10
EPWM6_A	1					O	ePWM-6 Output A
CANB_RX	2					I	CAN-B Receive
ADCSOCBO	3					O	ADC Start of Conversion B Output for External ADC (from ePWM modules)
EQEP1_A	5					I	eQEP-1 Input A
SCIB_TX	6					O	SCI-B Transmit Data
SPIA_SOMI	7					I/O	SPI-A Slave Out, Master In (SOMI)
I2CA_SDA	9					I/OD	I2C-A Open-Drain Bidirectional Data
FSITXA_CLK	10					O	FSITX-A Output Clock
GPIO11	0, 4, 8, 12	52	31	31	28	I/O	General-Purpose Input Output 11
EPWM6_B	1					O	ePWM-6 Output B
SCIB_RX	2, 6					I	SCI-B Receive Data
OUTPUTXBAR7	3					O	Output X-BAR Output 7
EQEP1_B	5					I	eQEP-1 Input B
SPIA_STE	7					I/O	SPI-A Slave Transmit Enable (STE)
FSIRXA_D1	9					I	FSIRX-A Optional Additional Data Input

Copyright © 2026 Texas Instruments Incorporated

Table 5-1. Pin Attributes (continued)

SIGNAL NAME	MUX POSITION	100 PZ	64 PMQ	64 PM	56 RSH	PIN TYPE	DESCRIPTION
GPIO12	0, 4, 8, 12					I/O	General-Purpose Input Output 12
EPWM7_A	1					O	ePWM-7 Output A
CANB_TX	2					O	CAN-B Transmit
EQEP1_STROBE	5	51		30	27	I/O	eQEP-1 Strobe
SCIB_TX	6					O	SCI-B Transmit Data
PMBUSA_CTL	7					I	PMBus-A Control Signal
FSIRXA_D0	9					I	FSIRX-A Primary Data Input
GPIO13	0, 4, 8, 12					I/O	General-Purpose Input Output 13
EPWM7_B	1					O	ePWM-7 Output B
CANB_RX	2					I	CAN-B Receive
EQEP1_INDEX	5	50		29	26	I/O	eQEP-1 Index
SCIB_RX	6					I	SCI-B Receive Data
PMBUSA_ALERT	7					I/OD	PMBus-A Open-Drain Bidirectional Alert Signal
FSIRXA_CLK	9					I	FSIRX-A Input Clock
GPIO14	0, 4, 8, 12					I/O	General-Purpose Input Output 14
EPWM8_A	1					O	ePWM-8 Output A
SCIB_TX	2					O	SCI-B Transmit Data
OUTPUTXBAR3	6	96				O	Output X-BAR Output 3
PMBUSA_SDA	7					I/OD	PMBus-A Open-Drain Bidirectional Data
SPIB_CLK	9					I/O	SPI-B Clock
EQEP2_A	10					I	eQEP-2 Input A
GPIO15	0, 4, 8, 12					I/O	General-Purpose Input Output 15
EPWM8_B	1					O	ePWM-8 Output B
SCIB_RX	2					I	SCI-B Receive Data
OUTPUTXBAR4	6	95				O	Output X-BAR Output 4
PMBUSA_SCL	7					I/OD	PMBus-A Open-Drain Bidirectional Clock
SPIB_STE	9					I/O	SPI-B Slave Transmit Enable (STE)
EQEP2_B	10					I	eQEP-2 Input B
GPIO16	0, 4, 8, 12					I/O	General-Purpose Input Output 16
SPIA_SIMO	1					I/O	SPI-A Slave In, Master Out (SIMO)
CANB_TX	2					O	CAN-B Transmit
OUTPUTXBAR7	3					O	Output X-BAR Output 7
EPWM5_A	5					O	ePWM-5 Output A
SCIA_TX	6	54	33	33	30	O	SCI-A Transmit Data
SD1_D1	7					I	SDFM-1 Channel 1 Data Input
EQEP1_STROBE	9					I/O	eQEP-1 Strobe
PMBUSA_SCL	10					I/OD	PMBus-A Open-Drain Bidirectional Clock
XCLKOUT	11					O	External Clock Output. This pin outputs a divided-down version of a chosen clock signal from within the device.

Copyright © 2026 Texas Instruments Incorporated

Table 5-1. Pin Attributes (continued)

SIGNAL NAME	MUX POSITION	100 PZ	64 PMQ	64 PM	56 RSH	PIN TYPE	DESCRIPTION
GPIO17	0, 4, 8, 12					I/O	General-Purpose Input Output 17
SPIA_SOMI	1					I/O	SPI-A Slave Out, Master In (SOMI)
CANB_RX	2					I	CAN-B Receive
OUTPUTXBAR8	3					O	Output X-BAR Output 8
EPWM5_B	5	55	34	34	31	O	ePWM-5 Output B
SCIA_RX	6					I	SCI-A Receive Data
SD1_C1	7					I	SDFM-1 Channel 1 Clock Input
EQEP1_INDEX	9					I/O	eQEP-1 Index
PMBUSA_SDA	10					I/OD	PMBus-A Open-Drain Bidirectional Data
GPIO18_X2	0, 4, 8, 12					I/O	General-Purpose Input Output 18. This pin and its digital mux options can only be used when the system is clocked by INTOSC and X1 has an external pulldown resistor (recommended 1 kΩ).
SPIA_CLK	1					I/O	SPI-A Clock
SCIB_TX	2					O	SCI-B Transmit Data
CANA_RX	3					I	CAN-A Receive
EPWM6_A	5	68	41	41	38	O	ePWM-6 Output A
I2CA_SCL	6					I/OD	I2C-A Open-Drain Bidirectional Clock
SD1_D2	7					I	SDFM-1 Channel 2 Data Input
EQEP2_A	9					I	eQEP-2 Input A
PMBUSA_CTL	10					I	PMBus-A Control Signal
XCLKOUT	11					O	External Clock Output. This pin outputs a divided-down version of a chosen clock signal from within the device.
X2	ALT					I/O	Crystal oscillator output
GPIO20	0					I/O	General-Purpose Input Output 20
GPIO21	0					I/O	General-Purpose Input Output 21
GPIO22_VFBSW	0, 4, 8, 12					I/O	General-Purpose Input Output 22. This pin is configured for DC-DC mode by default. If the internal DC-DC regulator is not used, this can be configured as General-Purpose Input Output 22 by disabling DC-DC(DCDCCTL.DCDCEN = 0) and clearing their bits in GPAAMSEL register.
EQEP1_STROBE	1					I/O	eQEP-1 Strobe
SCIB_TX	3					O	SCI-B Transmit Data
SPIB_CLK	6	83	56	56	51	I/O	SPI-B Clock
SD1_D4	7					I	SDFM-1 Channel 4 Data Input
LINA_TX	9					O	LIN-A Transmit
VFBSW[1]	ALT					-	Internal DC-DC regulator feedback signal. If the internal DC-DC regulator is used(DCDCCTL.DCDCEN = 1), tie this pin to the node where L(VSW) connects to the VDD rail (as close as possible to the device).
GPIO23_VSW	0	81	54	54	49	I/O	General-Purpose Input Output 23. This pin is configured for DC-DC mode by default. If the internal DC-DC regulator is not used, this can be configured as General-Purpose Input Output 23 by disabling DC-DC(DCDCCTL.DCDCEN = 0) and clearing their bits in GPAAMSEL register. This pin has an internal capacitance of approximately 100 pF. TI Recommends using an alternate GPIO, or using this pin only for applications which do not require a fast switching response.
VSW[1]	ALT					-	Switching output of the internal DC-DC regulator(when DCDCCTL.DCDCEN = 1)

Copyright © 2026 Texas Instruments Incorporated

Table 5-1. Pin Attributes (continued)

SIGNAL NAME	MUX POSITION	100 PZ	64 PMQ	64 PM	56 RSH	PIN TYPE	DESCRIPTION
GPIO24	0, 4, 8, 12	56	35	35	32	I/O	General-Purpose Input Output 24
OUTPUTXBAR1	1					O	Output X-BAR Output 1
EQEP2_A	2					I	eQEP-2 Input A
EPWM8_A	5					O	ePWM-8 Output A
SPIB_SIMO	6					I/O	SPI-B Slave In, Master Out (SIMO)
SD1_D1	7					I	SDFM-1 Channel 1 Data Input
PMBUSA_SCL	10					I/OD	PMBus-A Open-Drain Bidirectional Clock
SCIA_TX	11					O	SCI-A Transmit Data
ERRORSTS	13					O	Active-low Error Status Output. If you want an error state to be asserted during power up or during a fault with the ERRORSTS signal itself, an external pulldown resistor may be used. A pullup resistor may be used if you do not want an error state asserted for the conditions mentioned.
GPIO25	0, 4, 8, 12	57				I/O	General-Purpose Input Output 25
OUTPUTXBAR2	1					O	Output X-BAR Output 2
EQEP2_B	2					I	eQEP-2 Input B
SPIB_SOMI	6					I/O	SPI-B Slave Out, Master In (SOMI)
SD1_C1	7					I	SDFM-1 Channel 1 Clock Input
FSITXA_D1	9					O	FSITX-A Optional Additional Data Output
PMBUSA_SDA	10					I/OD	PMBus-A Open-Drain Bidirectional Data
SCIA_RX	11					I	SCI-A Receive Data
GPIO26	0, 4, 8, 12	58				I/O	General-Purpose Input Output 26
OUTPUTXBAR3	1, 5					O	Output X-BAR Output 3
EQEP2_INDEX	2					I/O	eQEP-2 Index
SPIB_CLK	6					I/O	SPI-B Clock
SD1_D2	7					I	SDFM-1 Channel 2 Data Input
FSITXA_D0	9					O	FSITX-A Primary Data Output
PMBUSA_CTL	10					I	PMBus-A Control Signal
I2CA_SDA	11					I/OD	I2C-A Open-Drain Bidirectional Data
GPIO27	0, 4, 8, 12	59				I/O	General-Purpose Input Output 27
OUTPUTXBAR4	1, 5					O	Output X-BAR Output 4
EQEP2_STROBE	2					I/O	eQEP-2 Strobe
SPIB_STE	6					I/O	SPI-B Slave Transmit Enable (STE)
SD1_C2	7					I	SDFM-1 Channel 2 Clock Input
FSITXA_CLK	9					O	FSITX-A Output Clock
PMBUSA_ALERT	10					I/OD	PMBus-A Open-Drain Bidirectional Alert Signal
I2CA_SCL	11					I/OD	I2C-A Open-Drain Bidirectional Clock

Copyright © 2026 Texas Instruments Incorporated

Table 5-1. Pin Attributes (continued)

SIGNAL NAME	MUX POSITION	100 PZ	64 PMQ	64 PM	56 RSH	PIN TYPE	DESCRIPTION
GPIO28	0, 4, 8, 12					I/O	General-Purpose Input Output 28
SCIA_RX	1					I	SCI-A Receive Data
EPWM7_A	3					O	ePWM-7 Output A
OUTPUTXBAR5	5					O	Output X-BAR Output 5
EQEP1_A	6					I	eQEP-1 Input A
SD1_D3	7					I	SDFM-1 Channel 3 Data Input
EQEP2_STROBE	9	1	2	2	3	I/O	eQEP-2 Strobe
LINA_TX	10					O	LIN-A Transmit
SPIB_CLK	11					I/O	SPI-B Clock
ERRORSTS	13					O	Active-low Error Status Output. If you want an error state to be asserted during power up or during a fault with the ERRORSTS signal itself, an external pulldown resistor may be used. A pullup resistor may be used if you do not want an error state asserted for the conditions mentioned.
GPIO29	0, 4, 8, 12					I/O	General-Purpose Input Output 29
SCIA_TX	1					O	SCI-A Transmit Data
EPWM7_B	3					O	ePWM-7 Output B
OUTPUTXBAR6	5					O	Output X-BAR Output 6
EQEP1_B	6					I	eQEP-1 Input B
SD1_C3	7					I	SDFM-1 Channel 3 Clock Input
EQEP2_INDEX	9	100	1	1	2	I/O	eQEP-2 Index
LINA_RX	10					I	LIN-A Receive
SPIB_STE	11					I/O	SPI-B Slave Transmit Enable (STE)
ERRORSTS	13					O	Active-low Error Status Output. If you want an error state to be asserted during power up or during a fault with the ERRORSTS signal itself, an external pulldown resistor may be used. A pullup resistor may be used if you do not want an error state asserted for the conditions mentioned.
GPIO30	0, 4, 8, 12					I/O	General-Purpose Input Output 30
CANA_RX	1					I	CAN-A Receive
SPIB_SIMO	3	98				I/O	SPI-B Slave In, Master Out (SIMO)
OUTPUTXBAR7	5					O	Output X-BAR Output 7
EQEP1_STROBE	6					I/O	eQEP-1 Strobe
SD1_D4	7					I	SDFM-1 Channel 4 Data Input
GPIO31	0, 4, 8, 12					I/O	General-Purpose Input Output 31
CANA_TX	1					O	CAN-A Transmit
SPIB_SOMI	3					I/O	SPI-B Slave Out, Master In (SOMI)
OUTPUTXBAR8	5	99				O	Output X-BAR Output 8
EQEP1_INDEX	6					I/O	eQEP-1 Index
SD1_C4	7					I	SDFM-1 Channel 4 Clock Input
FSIRXA_D1	9					I	FSIRX-A Optional Additional Data Input

Copyright © 2026 Texas Instruments Incorporated

Table 5-1. Pin Attributes (continued)

SIGNAL NAME	MUX POSITION	100 PZ	64 PMQ	64 PM	56 RSH	PIN TYPE	DESCRIPTION
GPIO32	0, 4, 8, 12	64	40	40	37	I/O	General-Purpose Input Output 32
I2CA_SDA	1					I/OD	I2C-A Open-Drain Bidirectional Data
SPIB_CLK	3					I/O	SPI-B Clock
EPWM8_B	5					O	ePWM-8 Output B
LINA_TX	6					O	LIN-A Transmit
SD1_D3	7					I	SDFM-1 Channel 3 Data Input
FSIRXA_D0	9					I	FSIRX-A Primary Data Input
CANA_TX	10					O	CAN-A Transmit
GPIO33	0, 4, 8, 12	53	32	32	29	I/O	General-Purpose Input Output 33
I2CA_SCL	1					I/OD	I2C-A Open-Drain Bidirectional Clock
SPIB_STE	3					I/O	SPI-B Slave Transmit Enable (STE)
OUTPUTXBAR4	5					O	Output X-BAR Output 4
LINA_RX	6					I	LIN-A Receive
SD1_C3	7					I	SDFM-1 Channel 3 Clock Input
FSIRXA_CLK	9					I	FSIRX-A Input Clock
CANA_RX	10					I	CAN-A Receive
GPIO34	0, 4, 8, 12	94				I/O	General-Purpose Input Output 34
OUTPUTXBAR1	1					O	Output X-BAR Output 1
PMBUSA_SDA	6					I/OD	PMBus-A Open-Drain Bidirectional Data
GPIO35	0, 4, 8, 12	63	39	39	36	I/O	General-Purpose Input Output 35
SCIA_RX	1					I	SCI-A Receive Data
I2CA_SDA	3					I/OD	I2C-A Open-Drain Bidirectional Data
CANA_RX	5					I	CAN-A Receive
PMBUSA_SCL	6					I/OD	PMBus-A Open-Drain Bidirectional Clock
LINA_RX	7					I	LIN-A Receive
EQEP1_A	9					I	eQEP-1 Input A
PMBUSA_CTL	10					I	PMBus-A Control Signal
TDI	15					I	JTAG Test Data Input (TDI) - TDI is the default mux selection for the pin. The internal pullup is disabled by default. The internal pullup should be enabled or an external pullup added on the board if this pin is used as JTAG TDI to avoid a floating input.
GPIO37	0, 4, 8, 12	61	37	37	34	I/O	General-Purpose Input Output 37
OUTPUTXBAR2	1					O	Output X-BAR Output 2
I2CA_SCL	3					I/OD	I2C-A Open-Drain Bidirectional Clock
SCIA_TX	5					O	SCI-A Transmit Data
CANA_TX	6					O	CAN-A Transmit
LINA_TX	7					O	LIN-A Transmit
EQEP1_B	9					I	eQEP-1 Input B
PMBUSA_ALERT	10					I/OD	PMBus-A Open-Drain Bidirectional Alert Signal
TDO	15					O	JTAG Test Data Output (TDO) - TDO is the default mux selection for the pin. The internal pullup is disabled by default. The TDO function will be in a tri-state condition when there is no JTAG activity, leaving this pin floating; the internal pullup should be enabled or an external pullup added on the board to avoid a floating GPIO input.

Copyright © 2026 Texas Instruments Incorporated

Table 5-1. Pin Attributes (continued)

SIGNAL NAME	MUX POSITION	100 PZ	64 PMQ	64 PM	56 RSH	PIN TYPE	DESCRIPTION
GPIO39	0, 4, 8, 12					I/O	General-Purpose Input Output 39
CANB_RX	6	91				I	CAN-B Receive
FSIRXA_CLK	7					I	FSIRX-A Input Clock
GPIO40	0, 4, 8, 12					I/O	General-Purpose Input Output 40
PMBUSA_SDA	6					I/OD	PMBus-A Open-Drain Bidirectional Data
FSIRXA_D0	7	85				I	FSIRX-A Primary Data Input
SCIB_TX	9					O	SCI-B Transmit Data
EQEP1_A	10					I	eQEP-1 Input A
GPIO41	0					I/O	General-Purpose Input Output 41
GPIO42	0					I/O	General-Purpose Input Output 42
GPIO43	0					I/O	General-Purpose Input Output 43
GPIO44	0					I/O	General-Purpose Input Output 44
GPIO45	0					I/O	General-Purpose Input Output 45
GPIO46	0					I/O	General-Purpose Input Output 46
GPIO47	0					I/O	General-Purpose Input Output 47
GPIO48	0					I/O	General-Purpose Input Output 48
GPIO49	0					I/O	General-Purpose Input Output 49
GPIO50	0					I/O	General-Purpose Input Output 50
GPIO51	0					I/O	General-Purpose Input Output 51
GPIO52	0					I/O	General-Purpose Input Output 52
GPIO53	0					I/O	General-Purpose Input Output 53
GPIO54	0					I/O	General-Purpose Input Output 54
GPIO55	0					I/O	General-Purpose Input Output 55
GPIO56	0, 4, 8, 12					I/O	General-Purpose Input Output 56
SPIA_CLK	1					I/O	SPI-A Clock
EQEP2_STROBE	5					I/O	eQEP-2 Strobe
SCIB_TX	6	65				O	SCI-B Transmit Data
SD1_D3	7					I	SDFM-1 Channel 3 Data Input
SPIB_SIMO	9					I/O	SPI-B Slave In, Master Out (SIMO)
EQEP1_A	11					I	eQEP-1 Input A
GPIO57	0, 4, 8, 12					I/O	General-Purpose Input Output 57
SPIA_STE	1					I/O	SPI-A Slave Transmit Enable (STE)
EQEP2_INDEX	5					I/O	eQEP-2 Index
SCIB_RX	6	66				I	SCI-B Receive Data
SD1_C3	7					I	SDFM-1 Channel 3 Clock Input
SPIB_SOMI	9					I/O	SPI-B Slave Out, Master In (SOMI)
EQEP1_B	11					I	eQEP-1 Input B
GPIO58	0, 4, 8, 12					I/O	General-Purpose Input Output 58
OUTPUTXBAR1	5					O	Output X-BAR Output 1
SPIB_CLK	6					I/O	SPI-B Clock
SD1_D4	7	67				I	SDFM-1 Channel 4 Data Input
LINA_TX	9					O	LIN-A Transmit
CANB_TX	10					O	CAN-B Transmit
EQEP1_STROBE	11					I/O	eQEP-1 Strobe

Copyright © 2026 Texas Instruments Incorporated

Table 5-1. Pin Attributes (continued)

SIGNAL NAME	MUX POSITION	100 PZ	64 PMQ	64 PM	56 RSH	PIN TYPE	DESCRIPTION
GPIO59	0, 4, 8, 12					I/O	General-Purpose Input Output 59
OUTPUTXBAR2	5					O	Output X-BAR Output 2
SPIB_STE	6					I/O	SPI-B Slave Transmit Enable (STE)
SD1_C4	7	92				I	SDFM-1 Channel 4 Clock Input
LINA_RX	9					I	LIN-A Receive
CANB_RX	10					I	CAN-B Receive
EQEP1_INDEX	11					I/O	eQEP-1 Index
TEST, JTAG, AND RESET							
FLT1		49	30			I/O	Flash test pin 1. Reserved for TI. Must be left unconnected.
FLT2		48	29			I/O	Flash test pin 2. Reserved for TI. Must be left unconnected.
TCK		60	36	36	33	I	JTAG test clock with internal pullup.
TMS		62	38	38	35	I/O	JTAG test-mode select (TMS) with internal pullup. This serial control input is clocked into the TAP controller on the rising edge of TCK. This device does not have a TRSTn pin. An external pullup resistor (recommended 2.2 kΩ) on the TMS pin to VDDIO should be placed on the board to keep JTAG in reset during normal operation.
VREGENZ		73	46	46		I	Internal voltage regulator enable with internal pulldown. Tie directly to VSS (low) to enable the internal VREG. Tie directly to VDDIO (high) to use an external supply.
X1		69	42	42	39	I/O	Crystal oscillator input or single-ended clock input. The device initialization software must configure this pin before the crystal oscillator is enabled. To use this oscillator, a quartz crystal circuit must be connected to X1 and X2. This pin can also be used to feed a single-ended 3.3-V level clock. GPIO19 is not supported. Internally GPIO19 is connected to the X1 function, therefore the GPIO19 should be kept in Input Mode with the Pullup disabled to avoid interference with the X1 clock function.
XRSn		2	3	3	4	I/OD	Device Reset (in) and Watchdog Reset (out). During a power-on condition, this pin is driven low by the device. An external circuit may also drive this pin to assert a device reset. This pin is also driven low by the MCU when a watchdog reset occurs. During watchdog reset, the XRSn pin is driven low for the watchdog reset duration of 512 OSCCLK cycles. A resistor with a value from 2.2 kΩ to 10 kΩ should be placed between XRSn and VDDIO. If a capacitor is placed between XRSn and VSS for noise filtering, it should be 100 nF or smaller. These values allow the watchdog to properly drive the XRSn pin to VOL within 512 OSCCLK cycles when the watchdog reset is asserted. The output buffer of this pin is an open-drain with an internal pullup. If this pin is driven by an external device, It should be done using an open-drain device. If this pin is driven by an external device, it should be done using an open-drain device.
POWER AND GROUND							
VDD		4, 46, 71, 87	4, 27, 44, 59	4, 27, 44, 59	5, 24, 41, 53		1.2-V Digital Logic Power Pins. TI recommends placing a decoupling capacitor near each VDD pin with a minimum total capacitance of approximately 20 µF. When not using the internal voltage regulator, the exact value of the decoupling capacitance should be determined by your system voltage regulation solution.
VDDA		11, 34	22	22	20		3.3-V Analog Power Pins. Place a minimum 2.2-µF decoupling capacitor to VSSA on each pin.

Copyright © 2026 Texas Instruments Incorporated

Table 5-1. Pin Attributes (continued)

SIGNAL NAME	MUX POSITION	100 PZ	64 PMQ	64 PM	56 RSH	PIN TYPE	DESCRIPTION
VDDIO		3, 47, 70, 88	28, 43, 60	28, 43, 60	25, 40, 54		3.3-V Digital I/O Power Pins. Place a minimum 0.1-µF decoupling capacitor on each pin.
VDDIO_SW		80	53	53	48		3.3-V Supply pin for the internal DC-DC regulator. If the internal DC-DC regulator is used, a bulk input capacitance of 20-µF should be placed on this pin. Always tie this pin to the VDDIO pin. A ferrite bead may be used for isolation if desired but VDDIO_SW and VDDIO must be supplied from the same source.
VSS		5, 45, 72, 86	5, 26, 45, 58	5, 26, 45, 58	PAD		Digital Ground
VSSA		12, 33	21	21	19		Analog Ground
VSS_SW		82	55	55	50		Internal DC-DC regulator ground. Always tie this pin to the VSS pin.

(1) When DCDCEN = 1 the respective bits in AMSEL register are *don't cares*.

Copyright © 2026 Texas Instruments Incorporated

5.3 Signal Descriptions

5.3.1 Analog Signals

Table 5-2. Analog Signals

SIGNAL NAME	DESCRIPTION	PIN TYPE	GPIO	100 PZ	64 PMQ	64 PM	56 RSH
A0	ADC-A Input 0	I		23	15	15	13
A1	ADC-A Input 1	I		22	14	14	12
A2	ADC-A Input 2	I		9	9	9	8
A3	ADC-A Input 3	I		10			
A4	ADC-A Input 4	I		36	23	23	21
A5	ADC-A Input 5	I		35			
A6	ADC-A Input 6	I		6	6	6	
A8	ADC-A Input 8	I		37			
A9	ADC-A Input 9	I		38			
A10	ADC-A Input 10	I		40	25	25	23
AIO224	Digital Input-224 on ADC Pin	I		9	9	9	8
AIO225	Digital Input-225 on ADC Pin	I		36	23	23	21
AIO226	Digital Input-226 on ADC Pin	I		7	7	7	6
AIO227	Digital Input-227 on ADC Pin	I		39	24	24	22
AIO228	Digital Input-228 on ADC Pin	I		6	6	6	
AIO229	Digital Input-229 on ADC Pin	I		37			
AIO230	Digital Input-230 on ADC Pin	I		40	25	25	23
AIO231	Digital Input-231 on ADC Pin	I		23	15	15	13
AIO232	Digital Input-232 on ADC Pin	I		22	14	14	12
AIO233	Digital Input-233 on ADC Pin	I		10			
AIO234	Digital Input-234 on ADC Pin	I		35			
AIO236	Digital Input-236 on ADC Pin	I		38			
AIO237	Digital Input-237 on ADC Pin	I		19	12	12	10
AIO238	Digital Input-238 on ADC Pin	I		29	18	18	16
AIO239	Digital Input-239 on ADC Pin	I		17	11	11	
AIO240	Digital Input-240 on ADC Pin	I		28			
AIO241	Digital Input-241 on ADC Pin	I		41			
AIO242	Digital Input-242 on ADC Pin	I		8	8	8	7
AIO244	Digital Input-244 on ADC Pin	I		21	13	13	11
AIO245	Digital Input-245 on ADC Pin	I		31	19	19	17
AIO246	Digital Input-246 on ADC Pin	I		44			
B0	ADC-B Input 0	I		41			
B1	ADC-B Input 1	I		40	25	25	23
B2	ADC-B Input 2	I		7	7	7	6
B3	ADC-B Input 3	I		8	8	8	7
B4	ADC-B Input 4	I		39	24	24	22
B6	ADC-B Input 6	I		9	9	9	8
B8	ADC-B Input 8	I		36	23	23	21
B15	ADC-B Input 15	I		23	15	15	13
C0	ADC-C Input 0	I		19	12	12	10
C1	ADC-C Input 1	I		29	18	18	16
C2	ADC-C Input 2	I		21	13	13	11

Copyright © 2026 Texas Instruments Incorporated

Table 5-2. Analog Signals (continued)

SIGNAL NAME	DESCRIPTION	PIN TYPE	GPIO	100 PZ	64 PMQ	64 PM	56 RSH
C3	ADC-C Input 3	I		31	19	19	17
C4	ADC-C Input 4	I		17	11	11	
C5	ADC-C Input 5	I		28			
C6	ADC-C Input 6	I		7	7	7	6
C8	ADC-C Input 8	I		39	24	24	22
C10	ADC-C Input 10	I		40	25	25	23
C14	ADC-C Input 14	I		44			
C15	ADC-C Input 15	I		23	15	15	13
CMP1_HN0	CMPSS-1 High Comparator Negative Input 0	I		10			
CMP1_HN1	CMPSS-1 High Comparator Negative Input 1	I		19	12	12	10
CMP1_HP0	CMPSS-1 High Comparator Positive Input 0	I		9	9	9	8
CMP1_HP1	CMPSS-1 High Comparator Positive Input 1	I		19	12	12	10
CMP1_HP2	CMPSS-1 High Comparator Positive Input 2	I		18	12	12	10
CMP1_HP3	CMPSS-1 High Comparator Positive Input 3	I		10			
CMP1_LN0	CMPSS-1 Low Comparator Negative Input 0	I		10			
CMP1_LN1	CMPSS-1 Low Comparator Negative Input 1	I		19	12	12	10
CMP1_LP0	CMPSS-1 Low Comparator Positive Input 0	I		9	9	9	8
CMP1_LP1	CMPSS-1 Low Comparator Positive Input 1	I		19	12	12	10
CMP1_LP2	CMPSS-1 Low Comparator Positive Input 2	I		18	12	12	10
CMP1_LP3	CMPSS-1 Low Comparator Positive Input 3	I		10			
CMP2_HN0	CMPSS-2 High Comparator Negative Input 0	I		35			
CMP2_HN1	CMPSS-2 High Comparator Negative Input 1	I		29	18	18	16
CMP2_HP0	CMPSS-2 High Comparator Positive Input 0	I		36	23	23	21
CMP2_HP1	CMPSS-2 High Comparator Positive Input 1	I		29	18	18	16
CMP2_HP2	CMPSS-2 High Comparator Positive Input 2	I		30	18	18	16
CMP2_HP3	CMPSS-2 High Comparator Positive Input 3	I		35			
CMP2_LN0	CMPSS-2 Low Comparator Negative Input 0	I		35			
CMP2_LN1	CMPSS-2 Low Comparator Negative Input 1	I		29	18	18	16
CMP2_LP0	CMPSS-2 Low Comparator Positive Input 0	I		36	23	23	21
CMP2_LP1	CMPSS-2 Low Comparator Positive Input 1	I		29	18	18	16
CMP2_LP2	CMPSS-2 Low Comparator Positive Input 2	I		30	18	18	16
CMP2_LP3	CMPSS-2 Low Comparator Positive Input 3	I		35			
CMP3_HN0	CMPSS-3 High Comparator Negative Input 0	I		8	8	8	7
CMP3_HN1	CMPSS-3 High Comparator Negative Input 1	I		21	13	13	11
CMP3_HP0	CMPSS-3 High Comparator Positive Input 0	I		7	7	7	6
CMP3_HP1	CMPSS-3 High Comparator Positive Input 1	I		21	13	13	11
CMP3_HP2	CMPSS-3 High Comparator Positive Input 2	I		20	13	13	11
CMP3_HP3	CMPSS-3 High Comparator Positive Input 3	I		8	8	8	7
CMP3_LN0	CMPSS-3 Low Comparator Negative Input 0	I		8	8	8	7
CMP3_LN1	CMPSS-3 Low Comparator Negative Input 1	I		21	13	13	11
CMP3_LP0	CMPSS-3 Low Comparator Positive Input 0	I		7	7	7	6
CMP3_LP1	CMPSS-3 Low Comparator Positive Input 1	I		21	13	13	11
CMP3_LP2	CMPSS-3 Low Comparator Positive Input 2	I		20	13	13	11
CMP3_LP3	CMPSS-3 Low Comparator Positive Input 3	I		8	8	8	7

Copyright © 2026 Texas Instruments Incorporated

Table 5-2. Analog Signals (continued)

SIGNAL NAME	DESCRIPTION	PIN TYPE	GPIO	100 PZ	64 PMQ	64 PM	56 RSH
CMP4_HN1	CMPSS-4 High Comparator Negative Input 1	I		31	19	19	17
CMP4_HP0	CMPSS-4 High Comparator Positive Input 0	I		39	24	24	22
CMP4_HP1	CMPSS-4 High Comparator Positive Input 1	I		31	19	19	17
CMP4_HP2	CMPSS-4 High Comparator Positive Input 2	I		31	19	19	17
CMP4_LN1	CMPSS-4 Low Comparator Negative Input 1	I		31	19	19	17
CMP4_LP0	CMPSS-4 Low Comparator Positive Input 0	I		39	24	24	22
CMP4_LP1	CMPSS-4 Low Comparator Positive Input 1	I		31	19	19	17
CMP4_LP2	CMPSS-4 Low Comparator Positive Input 2	I		31	19	19	17
CMP5_HN1	CMPSS-5 High Comparator Negative Input 1	I		17	11	11	
CMP5_HP0	CMPSS-5 High Comparator Positive Input 0	I		6	6	6	
CMP5_HP1	CMPSS-5 High Comparator Positive Input 1	I		17	11	11	
CMP5_HP2	CMPSS-5 High Comparator Positive Input 2	I		16	11	11	
CMP5_LN1	CMPSS-5 Low Comparator Negative Input 1	I		17	11	11	
CMP5_LP0	CMPSS-5 Low Comparator Positive Input 0	I		6	6	6	
CMP5_LP1	CMPSS-5 Low Comparator Positive Input 1	I		17	11	11	
CMP5_LP2	CMPSS-5 Low Comparator Positive Input 2	I		16	11	11	
CMP6_HN0	CMPSS-6 High Comparator Negative Input 0	I		38			
CMP6_HN1	CMPSS-6 High Comparator Negative Input 1	I		28			
CMP6_HP0	CMPSS-6 High Comparator Positive Input 0	I		37			
CMP6_HP1	CMPSS-6 High Comparator Positive Input 1	I		28			
CMP6_HP2	CMPSS-6 High Comparator Positive Input 2	I		28			
CMP6_HP3	CMPSS-6 High Comparator Positive Input 3	I		38			
CMP6_LN0	CMPSS-6 Low Comparator Negative Input 0	I		38			
CMP6_LN1	CMPSS-6 Low Comparator Negative Input 1	I		28			
CMP6_LP0	CMPSS-6 Low Comparator Positive Input 0	I		37			
CMP6_LP1	CMPSS-6 Low Comparator Positive Input 1	I		28			
CMP6_LP2	CMPSS-6 Low Comparator Positive Input 2	I		28			
CMP6_LP3	CMPSS-6 Low Comparator Positive Input 3	I		38			
CMP7_HN0	CMPSS-7 High Comparator Negative Input 0	I		41			
CMP7_HN1	CMPSS-7 High Comparator Negative Input 1	I		44			
CMP7_HP0	CMPSS-7 High Comparator Positive Input 0	I		40	25	25	23
CMP7_HP1	CMPSS-7 High Comparator Positive Input 1	I		44			
CMP7_HP2	CMPSS-7 High Comparator Positive Input 2	I		43			
CMP7_HP3	CMPSS-7 High Comparator Positive Input 3	I		41			
CMP7_LN0	CMPSS-7 Low Comparator Negative Input 0	I		41			
CMP7_LN1	CMPSS-7 Low Comparator Negative Input 1	I		44			
CMP7_LP0	CMPSS-7 Low Comparator Positive Input 0	I		40	25	25	23
CMP7_LP1	CMPSS-7 Low Comparator Positive Input 1	I		44			
CMP7_LP2	CMPSS-7 Low Comparator Positive Input 2	I		43			
CMP7_LP3	CMPSS-7 Low Comparator Positive Input 3	I		41			
DACA_OUT	Buffered DAC-A Output	O		23	15	15	13
DACB_OUT	Buffered DAC-B Output	O		22	14	14	12
PGA1_GND	PGA-1 Ground	I		14	10	10	9
PGA1_IN	PGA-1 Input	I		18	12	12	10

Copyright © 2026 Texas Instruments Incorporated

Table 5-2. Analog Signals (continued)

SIGNAL NAME	DESCRIPTION	PIN TYPE	GPIO	100 PZ	64 PMQ	64 PM	56 RSH
PGA1_OF	PGA-1 Output Filter (Optional)	O		9	9	9	8
PGA2_GND	PGA-2 Ground	I		32	20	20	18
PGA2_IN	PGA-2 Input	I		30	18	18	16
PGA2_OF	PGA-2 Output Filter (Optional)	O		36	23	23	21
PGA3_GND	PGA-3 Ground	I		15	10	10	9
PGA3_IN	PGA-3 Input	I		20	13	13	11
PGA3_OF	PGA-3 Output Filter (Optional)	O		7	7	7	6
PGA4_GND	PGA-4 Ground	I		32	20	20	18
PGA4_IN	PGA-4 Input	I		31	19	19	17
PGA4_OF	PGA-4 Output Filter (Optional)	O		39	24	24	22
PGA5_GND	PGA-5 Ground	I		13	10	10	9
PGA5_IN	PGA-5 Input	I		16	11	11	
PGA5_OF	PGA-5 Output Filter (Optional)	O		6	6	6	
PGA6_GND	PGA-6 Ground	I		32	20	20	18
PGA6_IN	PGA-6 Input	I		28			
PGA6_OF	PGA-6 Output Filter (Optional)	O		37			
PGA7_GND	PGA-7 Ground	I		42			
PGA7_IN	PGA-7 Input	I		43			
PGA7_OF	PGA-7 Output Filter (Optional)	O		40	25	25	23
VDAC	Optional external reference voltage for on-chip DACs. There is a 100-pF capacitor to VSSA on this pin whether used for ADC input or DAC reference which cannot be disabled. If this pin is being used as a reference for the on-chip DACs, place at least a 1-µF capacitor on this pin.	I		8	8	8	7
VREFHIA	ADC-A High Reference. In external reference mode, externally drive the high reference voltage onto this pin. In internal reference mode, a voltage is driven onto this pin by the device. In either mode, place at least a 2.2-µF capacitor on this pin. This capacitor should be placed as close to the device as possible between the VREFHIA and VREFLOA pins. Do not load this pin externally in either internal or external reference mode.	I/O		25	16	16	14
VREFHIB	ADC-B High Reference. In external reference mode, externally drive the high reference voltage onto this pin. In internal reference mode, a voltage is driven onto this pin by the device. In either mode, place at least a 2.2-µF capacitor on this pin. This capacitor should be placed as close to the device as possible between the VREFHIB and VREFLOB pins. Do not load this pin externally in either internal or external reference mode.	I/O		24	16	16	14

Copyright © 2026 Texas Instruments Incorporated

Table 5-2. Analog Signals (continued)

SIGNAL NAME	DESCRIPTION	PIN TYPE	GPIO	100 PZ	64 PMQ	64 PM	56 RSH
VREFHIC	ADC-C High Reference. In external reference mode, externally drive the high reference voltage onto this pin. In internal reference mode, a voltage is driven onto this pin by the device. In either mode, place at least a 2.2-µF capacitor on this pin. This capacitor should be placed as close to the device as possible between the VREFHIC and VREFLOC pins. Do not load this pin externally in either internal or external reference mode.	I/O		24	16	16	14
VREFLOA	ADC-A Low Reference	I		27	17	17	15
VREFLOB	ADC-B Low Reference	I		26	17	17	15
VREFLOC	ADC-C Low Reference	I		26	17	17	15

Copyright © 2026 Texas Instruments Incorporated

5.3.2 Digital Signals

Table 5-3. Digital Signals

SIGNAL NAME	DESCRIPTION	PIN TYPE	GPIO	100 PZ	64 PMQ	64 PM	56 RSH
ADCSOCAO	ADC Start of Conversion A Output for External ADC (from ePWM modules)	O	8	74	47	47	42
ADCSOCBO	ADC Start of Conversion B Output for External ADC (from ePWM modules)	O	10	93	63	63	
CANA_RX	CAN-A Receive	I	18, 30, 33, 35, 5	53, 63, 68, 89, 98	32, 39, 41, 61	32, 39, 41, 61	29, 36, 38, 55
CANA_TX	CAN-A Transmit	O	31, 32, 37, 4	61, 64, 75, 99	37, 40, 48	37, 40, 48	34, 37, 43
CANB_RX	CAN-B Receive	I	10, 13, 17, 39, 59, 7	50, 55, 84, 91, 92, 93	34, 57, 63	29, 34, 57, 63	26, 31, 52
CANB_TX	CAN-B Transmit	O	12, 16, 58, 6, 8	51, 54, 67, 74, 97	33, 47, 64	30, 33, 47, 64	1, 27, 30, 42
EPWM1_A	ePWM-1 Output A	O	0	79	52	52	47
EPWM1_B	ePWM-1 Output B	O	1	78	51	51	46
EPWM2_A	ePWM-2 Output A	O	2	77	50	50	45
EPWM2_B	ePWM-2 Output B	O	3	76	49	49	44
EPWM3_A	ePWM-3 Output A	O	4	75	48	48	43
EPWM3_B	ePWM-3 Output B	O	5	89	61	61	55
EPWM4_A	ePWM-4 Output A	O	6	97	64	64	1
EPWM4_B	ePWM-4 Output B	O	7	84	57	57	52
EPWM5_A	ePWM-5 Output A	O	16, 8	54, 74	33, 47	33, 47	30, 42
EPWM5_B	ePWM-5 Output B	O	17, 9	55, 90	34, 62	34, 62	31, 56
EPWM6_A	ePWM-6 Output A	O	10, 18	68, 93	41, 63	41, 63	38
EPWM6_B	ePWM-6 Output B	O	11	52	31	31	28
EPWM7_A	ePWM-7 Output A	O	12, 28	1, 51	2	2, 30	27, 3
EPWM7_B	ePWM-7 Output B	O	13, 29	100, 50	1	1, 29	2, 26
EPWM8_A	ePWM-8 Output A	O	14, 24	56, 96	35	35	32
EPWM8_B	ePWM-8 Output B	O	15, 32	64, 95	40	40	37
EQEP1_A	eQEP-1 Input A	I	10, 28, 35, 40, 56, 6	1, 63, 65, 85, 93, 97	2, 39, 63, 64	2, 39, 63, 64	1, 3, 36
EQEP1_B	eQEP-1 Input B	I	11, 29, 37, 57, 7	100, 52, 61, 66, 84	1, 31, 37, 57	1, 31, 37, 57	2, 28, 34, 52
EQEP1_INDEX	eQEP-1 Index	I/O	13, 17, 31, 59, 9	50, 55, 90, 92, 99	34, 62	29, 34, 62	26, 31, 56
EQEP1_STROBE	eQEP-1 Strobe	I/O	12, 16, 22, 30, 58, 8	51, 54, 67, 74, 83, 98	33, 47, 56	30, 33, 47, 56	27, 30, 42, 51
EQEP2_A	eQEP-2 Input A	I	14, 18, 24	56, 68, 96	35, 41	35, 41	32, 38
EQEP2_B	eQEP-2 Input B	I	15, 25	57, 95			
EQEP2_INDEX	eQEP-2 Index	I/O	26, 29, 57	100, 58, 66	1	1	2

Copyright © 2026 Texas Instruments Incorporated

Table 5-3. Digital Signals (continued)

SIGNAL NAME	DESCRIPTION	PIN TYPE	GPIO	100 PZ	64 PMQ	64 PM	56 RSH
EQEP2_STROBE	eQEP-2 Strobe	I/O	27, 28, 56	1, 59, 65	2	2	3
ERRORSTS	Active-low Error Status Output. If you want an error state to be asserted during power up or during a fault with the ERRORSTS signal itself, an external pulldown resistor may be used. A pullup resistor may be used if you do not want an error state asserted for the conditions mentioned.	O	24, 28, 29	1, 100, 56	1, 2, 35	1, 2, 35	2, 3, 32
FSIRXA_CLK	FSIRX-A Input Clock	I	13, 33, 39, 4	50, 53, 75, 91	32, 48	29, 32, 48	26, 29, 43
FSIRXA_D0	FSIRX-A Primary Data Input	I	12, 3, 32, 40	51, 64, 76, 85	40, 49	30, 40, 49	27, 37, 44
FSIRXA_D1	FSIRX-A Optional Additional Data Input	I	11, 2, 31	52, 77, 99	31, 50	31, 50	28, 45
FSITXA_CLK	FSITX-A Output Clock	O	10, 27, 7	59, 84, 93	57, 63	57, 63	52
FSITXA_D0	FSITX-A Primary Data Output	O	26, 6, 9	58, 90, 97	62, 64	62, 64	1, 56
FSITXA_D1	FSITX-A Optional Additional Data Output	O	25, 5, 8	57, 74, 89	47, 61	47, 61	42, 55
GPIO0	General-Purpose Input Output 0	I/O	0	79	52	52	47
GPIO1	General-Purpose Input Output 1	I/O	1	78	51	51	46
GPIO2	General-Purpose Input Output 2	I/O	2	77	50	50	45
GPIO3	General-Purpose Input Output 3	I/O	3	76	49	49	44
GPIO4	General-Purpose Input Output 4	I/O	4	75	48	48	43
GPIO5	General-Purpose Input Output 5	I/O	5	89	61	61	55
GPIO6	General-Purpose Input Output 6	I/O	6	97	64	64	1
GPIO7	General-Purpose Input Output 7	I/O	7	84	57	57	52
GPIO8	General-Purpose Input Output 8	I/O	8	74	47	47	42
GPIO9	General-Purpose Input Output 9	I/O	9	90	62	62	56
GPIO10	General-Purpose Input Output 10	I/O	10	93	63	63	
GPIO11	General-Purpose Input Output 11	I/O	11	52	31	31	28
GPIO12	General-Purpose Input Output 12	I/O	12	51		30	27
GPIO13	General-Purpose Input Output 13	I/O	13	50		29	26
GPIO14	General-Purpose Input Output 14	I/O	14	96			
GPIO15	General-Purpose Input Output 15	I/O	15	95			
GPIO16	General-Purpose Input Output 16	I/O	16	54	33	33	30
GPIO17	General-Purpose Input Output 17	I/O	17	55	34	34	31
GPIO18_X2	General-Purpose Input Output 18. This pin and its digital mux options can only be used when the system is clocked by INTOSC and X1 has an external pulldown resistor (recommended 1 kΩ).	I/O	18	68	41	41	38
GPIO20	General-Purpose Input Output 20	I/O	20				
GPIO21	General-Purpose Input Output 21	I/O	21				

Copyright © 2026 Texas Instruments Incorporated

Table 5-3. Digital Signals (continued)

SIGNAL NAME	DESCRIPTION	PIN TYPE	GPIO	100 PZ	64 PMQ	64 PM	56 RSH
GPIO22_VFBSW	General-Purpose Input Output 22. This pin is configured for DC-DC mode by default. If the internal DC-DC regulator is not used, this can be configured as General-Purpose Input Output 22 by disabling DC-DC and clearing their bits in GPAAMSEL register.	I/O	22	83	56	56	51
GPIO23_VSW	General-Purpose Input Output 23. This pin is configured for DC-DC mode by default. If the internal DC-DC regulator is not used, this can be configured as General-Purpose Input Output 23 by disabling DC-DC and clearing their bits in GPAAMSEL register. This pin has an internal capacitance of approximately 100 pF. TI Recommends using an alternate GPIO, or using this pin only for applications which do not require a fast switching response.	I/O	23	81	54	54	49
GPIO24	General-Purpose Input Output 24	I/O	24	56	35	35	32
GPIO25	General-Purpose Input Output 25	I/O	25	57			
GPIO26	General-Purpose Input Output 26	I/O	26	58			
GPIO27	General-Purpose Input Output 27	I/O	27	59			
GPIO28	General-Purpose Input Output 28	I/O	28	1	2	2	3
GPIO29	General-Purpose Input Output 29	I/O	29	100	1	1	2
GPIO30	General-Purpose Input Output 30	I/O	30	98			
GPIO31	General-Purpose Input Output 31	I/O	31	99			
GPIO32	General-Purpose Input Output 32	I/O	32	64	40	40	37
GPIO33	General-Purpose Input Output 33	I/O	33	53	32	32	29
GPIO34	General-Purpose Input Output 34	I/O	34	94			
GPIO35	General-Purpose Input Output 35	I/O	35	63	39	39	36
GPIO37	General-Purpose Input Output 37	I/O	37	61	37	37	34
GPIO39	General-Purpose Input Output 39	I/O	39	91			
GPIO40	General-Purpose Input Output 40	I/O	40	85			
GPIO41	General-Purpose Input Output 41	I/O	41				
GPIO42	General-Purpose Input Output 42	I/O	42				
GPIO43	General-Purpose Input Output 43	I/O	43				
GPIO44	General-Purpose Input Output 44	I/O	44				
GPIO45	General-Purpose Input Output 45	I/O	45				
GPIO46	General-Purpose Input Output 46	I/O	46				
GPIO47	General-Purpose Input Output 47	I/O	47				
GPIO48	General-Purpose Input Output 48	I/O	48				
GPIO49	General-Purpose Input Output 49	I/O	49				
GPIO50	General-Purpose Input Output 50	I/O	50				
GPIO51	General-Purpose Input Output 51	I/O	51				
GPIO52	General-Purpose Input Output 52	I/O	52				
GPIO53	General-Purpose Input Output 53	I/O	53				
GPIO54	General-Purpose Input Output 54	I/O	54				
GPIO55	General-Purpose Input Output 55	I/O	55				
GPIO56	General-Purpose Input Output 56	I/O	56	65			
GPIO57	General-Purpose Input Output 57	I/O	57	66			
GPIO58	General-Purpose Input Output 58	I/O	58	67			

Copyright © 2026 Texas Instruments Incorporated

Table 5-3. Digital Signals (continued)

SIGNAL NAME	DESCRIPTION	PIN TYPE	GPIO	100 PZ	64 PMQ	64 PM	56 RSH
GPIO59	General-Purpose Input Output 59	I/O	59	92			
I2CA_SCL	I2C-A Open-Drain Bidirectional Clock	I/OD	1, 18, 27, 33, 37, 8	53, 59, 61, 68, 74, 78	32, 37, 41, 47, 51	32, 37, 41, 47, 51	29, 34, 38, 42, 46
I2CA_SDA	I2C-A Open-Drain Bidirectional Data	I/OD	0, 10, 26, 32, 35	58, 63, 64, 79, 93	39, 40, 52, 63	39, 40, 52, 63	36, 37, 47
LINA_RX	LIN-A Receive	I	29, 33, 35, 59	100, 53, 63, 92	1, 32, 39	1, 32, 39	2, 29, 36
LINA_TX	LIN-A Transmit	O	22, 28, 32, 37, 58	1, 61, 64, 67, 83	2, 37, 40, 56	2, 37, 40, 56	3, 34, 37, 51
OUTPUTXBAR1	Output X-BAR Output 1	O	2, 24, 34, 58	56, 67, 77, 94	35, 50	35, 50	32, 45
OUTPUTXBAR2	Output X-BAR Output 2	O	25, 3, 37, 59	57, 61, 76, 92	37, 49	37, 49	34, 44
OUTPUTXBAR3	Output X-BAR Output 3	O	14, 26, 4, 5	58, 75, 89, 96	48, 61	48, 61	43, 55
OUTPUTXBAR4	Output X-BAR Output 4	O	15, 27, 33, 6	53, 59, 95, 97	32, 64	32, 64	1, 29
OUTPUTXBAR5	Output X-BAR Output 5	O	28, 7	1, 84	2, 57	2, 57	3, 52
OUTPUTXBAR6	Output X-BAR Output 6	O	29, 9	100, 90	1, 62	1, 62	2, 56
OUTPUTXBAR7	Output X-BAR Output 7	O	11, 16, 30	52, 54, 98	31, 33	31, 33	28, 30
OUTPUTXBAR8	Output X-BAR Output 8	O	17, 31	55, 99	34	34	31
PMBUSA_ALERT	PMBus-A Open-Drain Bidirectional Alert Signal	I/OD	13, 27, 37	50, 59, 61	37	29, 37	26, 34
PMBUSA_CTL	PMBus-A Control Signal	I	12, 18, 26, 35	51, 58, 63, 68	39, 41	30, 39, 41	27, 36, 38
PMBUSA_SCL	PMBus-A Open-Drain Bidirectional Clock	I/OD	15, 16, 24, 3, 35	54, 56, 63, 76, 95	33, 35, 39, 49	33, 35, 39, 49	30, 32, 36, 44
PMBUSA_SDA	PMBus-A Open-Drain Bidirectional Data	I/OD	14, 17, 2, 25, 34, 40	55, 57, 77, 85, 94, 96	34, 50	34, 50	31, 45
SCIA_RX	SCI-A Receive Data	I	17, 25, 28, 3, 35, 9	1, 55, 57, 63, 76, 90	2, 34, 39, 49, 62	2, 34, 39, 49, 62	3, 31, 36, 44, 56
SCIA_TX	SCI-A Transmit Data	O	16, 2, 24, 29, 37, 8	100, 54, 56, 61, 74, 77	1, 33, 35, 37, 47, 50	1, 33, 35, 37, 47, 50	2, 30, 32, 34, 42, 45
SCIB_RX	SCI-B Receive Data	I	11, 13, 15, 57	50, 52, 66, 95	31	29, 31	26, 28
SCIB_TX	SCI-B Transmit Data	O	10, 12, 14, 18, 22, 40, 56, 9	51, 65, 68, 83, 85, 90, 93, 96	41, 56, 62, 63	30, 41, 56, 62, 63	27, 38, 51, 56
SD1_C1	SDFM-1 Channel 1 Clock Input	I	17, 25	55, 57	34	34	31
SD1_C2	SDFM-1 Channel 2 Clock Input	I	27	59			
SD1_C3	SDFM-1 Channel 3 Clock Input	I	29, 33, 57	100, 53, 66	1, 32	1, 32	2, 29
SD1_C4	SDFM-1 Channel 4 Clock Input	I	31, 59	92, 99			
SD1_D1	SDFM-1 Channel 1 Data Input	I	16, 24	54, 56	33, 35	33, 35	30, 32

Copyright © 2026 Texas Instruments Incorporated

Table 5-3. Digital Signals (continued)

SIGNAL NAME	DESCRIPTION	PIN TYPE	GPIO	100 PZ	64 PMQ	64 PM	56 RSH
SD1_D2	SDFM-1 Channel 2 Data Input	I	18, 26	58, 68	41	41	38
SD1_D3	SDFM-1 Channel 3 Data Input	I	28, 32, 56	1, 64, 65	2, 40	2, 40	3, 37
SD1_D4	SDFM-1 Channel 4 Data Input	I	22, 30, 58	67, 83, 98	56	56	51
SPIA_CLK	SPI-A Clock	I/O	18, 3, 56, 9	65, 68, 76, 90	41, 49, 62	41, 49, 62	38, 44, 56
SPIA_SIMO	SPI-A Slave In, Master Out (SIMO)	I/O	16, 8	54, 74	33, 47	33, 47	30, 42
SPIA_SOMI	SPI-A Slave Out, Master In (SOMI)	I/O	10, 17	55, 93	34, 63	34, 63	31
SPIA_STE	SPI-A Slave Transmit Enable (STE)	I/O	11, 5, 57	52, 66, 89	31, 61	31, 61	28, 55
SPIB_CLK	SPI-B Clock	I/O	14, 22, 26, 28, 32, 58	1, 58, 64, 67, 83, 96	2, 40, 56	2, 40, 56	3, 37, 51
SPIB_SIMO	SPI-B Slave In, Master Out (SIMO)	I/O	24, 30, 56, 7	56, 65, 84, 98	35, 57	35, 57	32, 52
SPIB_SOMI	SPI-B Slave Out, Master In (SOMI)	I/O	25, 31, 57, 6	57, 66, 97, 99	64	64	1
SPIB_STE	SPI-B Slave Transmit Enable (STE)	I/O	15, 27, 29, 33, 59	100, 53, 59, 92, 95	1, 32	1, 32	2, 29
SYNCOUT	External ePWM Synchronization Pulse	O	6	97	64	64	1
TDI	JTAG Test Data Input (TDI) - TDI is the default mux selection for the pin. The internal pullup is disabled by default. The internal pullup should be enabled or an external pullup added on the board if this pin is used as JTAG TDI to avoid a floating input.	I	35	63	39	39	36
TDO	JTAG Test Data Output (TDO) - TDO is the default mux selection for the pin. The internal pullup is disabled by default. The TDO function will be in a tri-state condition when there is no JTAG activity, leaving this pin floating; the internal pullup should be enabled or an external pullup added on the board to avoid a floating GPIO input.	O	37	61	37	37	34
VFBSW	Internal DC-DC regulator feedback signal. If the internal DC-DC regulator is used, tie this pin to the node where L(VSW) connects to the VDD rail (as close as possible to the device).	-	22	83	56	56	51
VSW	Switching output of the internal DC-DC regulator	-	23	81	54	54	49
X2	Crystal oscillator output	I/O	18	68	41	41	38
XCLKOUT	External Clock Output. This pin outputs a divided-down version of a chosen clock signal from within the device.	O	16, 18	54, 68	33, 41	33, 41	30, 38

Copyright © 2026 Texas Instruments Incorporated

5.3.3 Power and Ground

Table 5-4. Power and Ground

SIGNAL NAME	DESCRIPTION	PIN TYPE	GPIO	100 PZ	64 PMQ	64 PM	56 RSH
VDD	1.2-V Digital Logic Power Pins. TI recommends placing a decoupling capacitor near each VDD pin with a minimum total capacitance of approximately 20 µF. When not using the internal voltage regulator, the exact value of the decoupling capacitance should be determined by your system voltage regulation solution.			4, 46, 71, 87	27, 4, 44, 59	27, 4, 44, 59	24, 41, 5, 53
VDDA	3.3-V Analog Power Pins. Place a minimum 2.2-µF decoupling capacitor to VSSA on each pin.			11, 34	22	22	20
VDDIO	3.3-V Digital I/O Power Pins. Place a minimum 0.1-µF decoupling capacitor on each pin.			3, 47, 70, 88	28, 43, 60	28, 43, 60	25, 40, 54
VDDIO_SW	3.3-V Supply pin for the internal DC-DC regulator. If the internal DC-DC regulator is used, a bulk input capacitance of 20-µF should be placed on this pin. Always tie this pin to the VDDIO pin. A ferrite bead may be used for isolation if desired but VDDIO_SW and VDDIO must be supplied from the same source.			80	53	53	48
VSS	Digital Ground			45, 5, 72, 86	26, 45, 5, 58	26, 45, 5, 58	PAD
VSSA	Analog Ground			12, 33	21	21	19
VSS_SW	Internal DC-DC regulator ground. Always tie this pin to the VSS pin.			82	55	55	50

Copyright © 2026 Texas Instruments Incorporated

5.3.4 Test, JTAG, and Reset

Table 5-5. Test, JTAG, and Reset

SIGNAL NAME	DESCRIPTION	PIN TYPE	GPIO	100 PZ	64 PMQ	64 PM	56 RSH
FLT1	Flash test pin 1. Reserved for TI. Must be left unconnected.	I/O		49	30		
FLT2	Flash test pin 2. Reserved for TI. Must be left unconnected.	I/O		48	29		
TCK	JTAG test clock with internal pullup.	I		60	36	36	33
TMS	JTAG test-mode select (TMS) with internal pullup. This serial control input is clocked into the TAP controller on the rising edge of TCK. This device does not have a TRSTn pin. An external pullup resistor (recommended 2.2 kΩ) on the TMS pin to VDDIO should be placed on the board to keep JTAG in reset during normal operation.	I/O		62	38	38	35
VREGENZ	Internal voltage regulator enable with internal pulldown. Tie directly to VSS (low) to enable the internal VREG. Tie directly to VDDIO (high) to use an external supply.	I		73	46	46	
X1	Crystal oscillator input or single-ended clock input. The device initialization software must configure this pin before the crystal oscillator is enabled. To use this oscillator, a quartz crystal circuit must be connected to X1 and X2. This pin can also be used to feed a single-ended 3.3-V level clock. GPIO19 is not supported. Internally GPIO19 is connected to the X1 function, therefore the GPIO19 should be kept in Input Mode with the Pullup disabled to avoid interference with the X1 clock function.	I/O		69	42	42	39
XRSn	Device Reset (in) and Watchdog Reset (out). During a power-on condition, this pin is driven low by the device. An external circuit may also drive this pin to assert a device reset. This pin is also driven low by the MCU when a watchdog reset occurs. During watchdog reset, the XRSn pin is driven low for the watchdog reset duration of 512 OSCCLK cycles. A resistor with a value from 2.2 kΩ to 10 kΩ should be placed between XRSn and VDDIO. If a capacitor is placed between XRSn and VSS for noise filtering, it should be 100 nF or smaller. These values allow the watchdog to properly drive the XRSn pin to VOL within 512 OSCCLK cycles when the watchdog reset is asserted. The output buffer of this pin is an open-drain with an internal pullup. If this pin is driven by an external device, It should be done using an open-drain device. If this pin is driven by an external device, it should be done using an open-drain device.	I/OD		2	3	3	4

Copyright © 2026 Texas Instruments Incorporated

5.4 Pin Multiplexing

5.4.1 GPIO Muxed Pins

The *GPIO Muxed Pins* table lists the GPIO muxed pins. The default mode for each GPIO pin is the GPIO function, except GPIO35 and GPIO37, which default to TDI and TDO, respectively. Secondary functions can be selected by setting both the GPyGMUXn.GPIOz and GPyMUXn.GPIOz register bits. The GPyGMUXn register should be configured before the GPyMUXn to avoid transient pulses on GPIOs from alternate mux selections. Columns that are not shown and blank cells are reserved GPIO Mux settings.

Note

GPIO20, GPIO21, and GPIO41 to GPIO55 are not available on any packages. Boot ROM enables pullups on these pins. For more details, see Section 5.5.

Table 5-6. GPIO Muxed Pins

0, 4, 8, 12	1	2	3	5	6	7	9	10	11	13	14	15
GPIO0	EPWM1_A				I2CA_SDA							
GPIO1	EPWM1_B				I2CA_SCL							
GPIO2	EPWM2_A			OUTPUTXBAR1	PMBUSA_SDA		SCIA_TX	FSIRXA_D1				
GPIO3	EPWM2_B	OUTPUTXBAR2		OUTPUTXBAR2	PMBUSA_SCL	SPIA_CLK	SCIA_RX	FSIRXA_D0				
GPIO4	EPWM3_A			OUTPUTXBAR3	CANA_TX			FSIRXA_CLK				
GPIO5	EPWM3_B		OUTPUTXBAR3		CANA_RX	SPIA_STE	FSITXA_D1					
GPIO6	EPWM4_A	OUTPUTXBAR4	SYNCOUT	EQEP1_A	CANB_TX	SPIB_SOMI	FSITXA_D0					
GPIO7	EPWM4_B		OUTPUTXBAR5	EQEP1_B	CANB_RX	SPIB_SIMO	FSITXA_CLK					
GPIO8	EPWM5_A	CANB_TX	ADCSOCAO	EQEP1_STROBE	SCIA_TX	SPIA_SIMO	I2CA_SCL	FSITXA_D1				
GPIO9	EPWM5_B	SCIB_TX	OUTPUTXBAR6	EQEP1_INDEX	SCIA_RX	SPIA_CLK		FSITXA_D0				
GPIO10	EPWM6_A	CANB_RX	ADCSOCBO	EQEP1_A	SCIB_TX	SPIA_SOMI	I2CA_SDA	FSITXA_CLK				
GPIO11	EPWM6_B	SCIB_RX	OUTPUTXBAR7	EQEP1_B	SCIB_RX	SPIA_STE	FSIRXA_D1					
GPIO12	EPWM7_A	CANB_TX		EQEP1_STROBE	SCIB_TX	PMBUSA_CTL	FSIRXA_D0					
GPIO13	EPWM7_B	CANB_RX		EQEP1_INDEX	SCIB_RX	PMBUSA_ALERT	FSIRXA_CLK					
GPIO14	EPWM8_A	SCIB_TX			OUTPUTXBAR3	PMBUSA_SDA	SPIB_CLK	EQEP2_A				
GPIO15	EPWM8_B	SCIB_RX			OUTPUTXBAR4	PMBUSA_SCL	SPIB_STE	EQEP2_B				
GPIO16	SPIA_SIMO	CANB_TX	OUTPUTXBAR7	EPWM5_A	SCIA_TX	SD1_D1	EQEP1_STROBE	PMBUSA_SCL	XCLKOUT			

Copyright © 2026 Texas Instruments Incorporated

Table 5-6. GPIO Muxed Pins (continued)

0, 4, 8, 12	1	2	3	5	6	7	9	10	11	13	14	15
GPIO17	SPIA_SOMI	CANB_RX	OUTPUTXBAR8	EPWM5_B	SCIA_RX	SD1_C1	EQEP1_INDEX	PMBUSA_SDA				
GPIO18_X2	SPIA_CLK	SCIB_TX	CANA_RX	EPWM6_A	I2CA_SCL	SD1_D2	EQEP2_A	PMBUSA_CTL	XCLKOUT			
GPIO20												
GPIO21												
GPIO22_VFBSW	EQEP1_STROBE		SCIB_TX		SPIB_CLK	SD1_D4	LINA_TX					
GPIO23_VSW												
GPIO24	OUTPUTXBAR1	EQEP2_A		EPWM8_A	SPIB_SIMO	SD1_D1		PMBUSA_SCL	SCIA_TX	ERRORSTS		
GPIO25	OUTPUTXBAR2	EQEP2_B			SPIB_SOMI	SD1_C1	FSITXA_D1	PMBUSA_SDA	SCIA_RX			
GPIO26	OUTPUTXBAR3	EQEP2_INDEX		OUTPUTXBAR3	SPIB_CLK	SD1_D2	FSITXA_D0	PMBUSA_CTL	I2CA_SDA			
GPIO27	OUTPUTXBAR4	EQEP2_STROBE		OUTPUTXBAR4	SPIB_STE	SD1_C2	FSITXA_CLK	PMBUSA_ALERT	I2CA_SCL			
GPIO28	SCIA_RX		EPWM7_A	OUTPUTXBAR5	EQEP1_A	SD1_D3	EQEP2_STROBE	LINA_TX	SPIB_CLK	ERRORSTS		
GPIO29	SCIA_TX		EPWM7_B	OUTPUTXBAR6	EQEP1_B	SD1_C3	EQEP2_INDEX	LINA_RX	SPIB_STE	ERRORSTS		
GPIO30	CANA_RX		SPIB_SIMO	OUTPUTXBAR7	EQEP1_STROBE	SD1_D4						
GPIO31	CANA_TX		SPIB_SOMI	OUTPUTXBAR8	EQEP1_INDEX	SD1_C4	FSIRXA_D1					
GPIO32	I2CA_SDA		SPIB_CLK	EPWM8_B	LINA_TX	SD1_D3	FSIRXA_D0	CANA_TX				
GPIO33	I2CA_SCL		SPIB_STE	OUTPUTXBAR4	LINA_RX	SD1_C3	FSIRXA_CLK	CANA_RX				
GPIO34	OUTPUTXBAR1				PMBUSA_SDA							
GPIO35	SCIA_RX		I2CA_SDA	CANA_RX	PMBUSA_SCL	LINA_RX	EQEP1_A	PMBUSA_CTL				TDI
GPIO37	OUTPUTXBAR2		I2CA_SCL	SCIA_TX	CANA_TX	LINA_TX	EQEP1_B	PMBUSA_ALERT				TDO
GPIO39					CANB_RX	FSIRXA_CLK						
GPIO40					PMBUSA_SDA	FSIRXA_D0	SCIB_TX	EQEP1_A				
GPIO41												
GPIO42												
GPIO43												
GPIO44												

Copyright © 2026 Texas Instruments Incorporated

Table 5-6. GPIO Muxed Pins (continued)

0, 4, 8, 12	1	2	3	5	6	7	9	10	11	13	14	15
GPIO45												
GPIO46												
GPIO47												
GPIO48												
GPIO49												
GPIO50												
GPIO51												
GPIO52												
GPIO53												
GPIO54												
GPIO55												
GPIO56	SPIA_CLK			EQEP2_STROBE	SCIB_TX	SD1_D3	SPIB_SIMO		EQEP1_A			
GPIO57	SPIA_STE			EQEP2_INDEX	SCIB_RX	SD1_C3	SPIB_SOMI		EQEP1_B			
GPIO58				OUTPUTXBAR1	SPIB_CLK	SD1_D4	LINA_TX	CANB_TX	EQEP1_STROBE			
GPIO59				OUTPUTXBAR2	SPIB_STE	SD1_C4	LINA_RX	CANB_RX	EQEP1_INDEX			

The *Digital Signals by GPIO* table lists all muxed signals available and the respective GPIO within each package.

Table 5-7. Digital Signals by GPIO

SIGNAL NAME	PIN TYPE	DESCRIPTION	100 PZ	64 PMQ	64 PM	56 RSH
ADCSOCAO	O	ADC Start of Conversion A Output for External ADC (from ePWM modules)	GPIO8	GPIO8	GPIO8	GPIO8
ADCSOCBO	O	ADC Start of Conversion B Output for External ADC (from ePWM modules)	GPIO10	GPIO10	GPIO10	
CANA_RX	I	CAN-A Receive	GPIO5 GPIO18_X2 GPIO30 GPIO33 GPIO35/TDI	GPIO5 GPIO18_X2 GPIO33 GPIO35/TDI	GPIO5 GPIO18_X2 GPIO33 GPIO35/TDI	GPIO5 GPIO18_X2 GPIO33 GPIO35/TDI
CANA_TX	O	CAN-A Transmit	GPIO4 GPIO31 GPIO32 GPIO37/TDO	GPIO4 GPIO32 GPIO37/TDO	GPIO4 GPIO32 GPIO37/TDO	GPIO4 GPIO32 GPIO37/TDO

Copyright © 2026 Texas Instruments Incorporated

Table 5-7. Digital Signals by GPIO (continued)

SIGNAL NAME	PIN TYPE	DESCRIPTION	100 PZ	64 PMQ	64 PM	56 RSH
CANB_RX	I	CAN-B Receive	GPIO7 GPIO10 GPIO13 GPIO17 GPIO39 GPIO59	GPIO7 GPIO10 GPIO17	GPIO7 GPIO10 GPIO13 GPIO17	GPIO7 GPIO13 GPIO17
CANB_TX	O	CAN-B Transmit	GPIO6 GPIO8 GPIO12 GPIO16 GPIO58	GPIO6 GPIO8 GPIO16	GPIO6 GPIO8 GPIO12 GPIO16	GPIO6 GPIO8 GPIO12 GPIO16
EPWM1_A	O	ePWM-1 Output A	GPIO0	GPIO0	GPIO0	GPIO0
EPWM1_B	O	ePWM-1 Output B	GPIO1	GPIO1	GPIO1	GPIO1
EPWM2_A	O	ePWM-2 Output A	GPIO2	GPIO2	GPIO2	GPIO2
EPWM2_B	O	ePWM-2 Output B	GPIO3	GPIO3	GPIO3	GPIO3
EPWM3_A	O	ePWM-3 Output A	GPIO4	GPIO4	GPIO4	GPIO4
EPWM3_B	O	ePWM-3 Output B	GPIO5	GPIO5	GPIO5	GPIO5
EPWM4_A	O	ePWM-4 Output A	GPIO6	GPIO6	GPIO6	GPIO6
EPWM4_B	O	ePWM-4 Output B	GPIO7	GPIO7	GPIO7	GPIO7
EPWM5_A	O	ePWM-5 Output A	GPIO8 GPIO16	GPIO8 GPIO16	GPIO8 GPIO16	GPIO8 GPIO16
EPWM5_B	O	ePWM-5 Output B	GPIO9 GPIO17	GPIO9 GPIO17	GPIO9 GPIO17	GPIO9 GPIO17
EPWM6_A	O	ePWM-6 Output A	GPIO10 GPIO18_X2	GPIO10 GPIO18_X2	GPIO10 GPIO18_X2	GPIO18_X2
EPWM6_B	O	ePWM-6 Output B	GPIO11	GPIO11	GPIO11	GPIO11
EPWM7_A	O	ePWM-7 Output A	GPIO12 GPIO28	GPIO28	GPIO12 GPIO28	GPIO12 GPIO28
EPWM7_B	O	ePWM-7 Output B	GPIO13 GPIO29	GPIO29	GPIO13 GPIO29	GPIO13 GPIO29
EPWM8_A	O	ePWM-8 Output A	GPIO14 GPIO24	GPIO24	GPIO24	GPIO24
EPWM8_B	O	ePWM-8 Output B	GPIO15 GPIO32	GPIO32	GPIO32	GPIO32
EQEP1_A	I	eQEP-1 Input A	GPIO6 GPIO10 GPIO28 GPIO35/TDI GPIO40 GPIO56	GPIO6 GPIO10 GPIO28 GPIO35/TDI	GPIO6 GPIO10 GPIO28 GPIO35/TDI	GPIO6 GPIO28 GPIO35/TDI

Copyright © 2026 Texas Instruments Incorporated

Table 5-7. Digital Signals by GPIO (continued)

SIGNAL NAME	PIN TYPE	DESCRIPTION	100 PZ	64 PMQ	64 PM	56 RSH
EQEP1_B	I	eQEP-1 Input B	GPIO7 GPIO11 GPIO29 GPIO37/TDO GPIO57	GPIO7 GPIO11 GPIO29 GPIO37/TDO	GPIO7 GPIO11 GPIO29 GPIO37/TDO	GPIO7 GPIO11 GPIO29 GPIO37/TDO
EQEP1_INDEX	I/O	eQEP-1 Index	GPIO9 GPIO13 GPIO17 GPIO31 GPIO59	GPIO9 GPIO17	GPIO9 GPIO13 GPIO17	GPIO9 GPIO13 GPIO17
EQEP1_STROBE	I/O	eQEP-1 Strobe	GPIO8 GPIO12 GPIO16 GPIO22_VFBSW GPIO30 GPIO58	GPIO8 GPIO16 GPIO22_VFBSW	GPIO8 GPIO12 GPIO16 GPIO22_VFBSW	GPIO8 GPIO12 GPIO16 GPIO22_VFBSW
EQEP2_A	I	eQEP-2 Input A	GPIO14 GPIO18_X2 GPIO24	GPIO18_X2 GPIO24	GPIO18_X2 GPIO24	GPIO18_X2 GPIO24
EQEP2_B	I	eQEP-2 Input B	GPIO15 GPIO25			
EQEP2_INDEX	I/O	eQEP-2 Index	GPIO26 GPIO29 GPIO57	GPIO29	GPIO29	GPIO29
EQEP2_STROBE	I/O	eQEP-2 Strobe	GPIO27 GPIO28 GPIO56	GPIO28	GPIO28	GPIO28
ERRORSTS	O	Active-low Error Status Output. If you want an error state to be asserted during power up or during a fault with the ERRORSTS signal itself, an external pulldown resistor may be used. A pullup resistor may be used if you do not want an error state asserted for the conditions mentioned.	GPIO24 GPIO28 GPIO29	GPIO24 GPIO28 GPIO29	GPIO24 GPIO28 GPIO29	GPIO24 GPIO28 GPIO29
FSIRXA_CLK	I	FSIRX-A Input Clock	GPIO4 GPIO13 GPIO33 GPIO39	GPIO4 GPIO33	GPIO4 GPIO13 GPIO33	GPIO4 GPIO13 GPIO33
FSIRXA_D0	I	FSIRX-A Primary Data Input	GPIO3 GPIO12 GPIO32 GPIO40	GPIO3 GPIO32	GPIO3 GPIO12 GPIO32	GPIO3 GPIO12 GPIO32
FSIRXA_D1	I	FSIRX-A Optional Additional Data Input	GPIO2 GPIO11 GPIO31	GPIO2 GPIO11	GPIO2 GPIO11	GPIO2 GPIO11

Copyright © 2026 Texas Instruments Incorporated

Table 5-7. Digital Signals by GPIO (continued)

SIGNAL NAME	PIN TYPE	DESCRIPTION	100 PZ	64 PMQ	64 PM	56 RSH
FSITXA_CLK	O	FSITX-A Output Clock	GPIO7 GPIO10 GPIO27	GPIO7 GPIO10	GPIO7 GPIO10	GPIO7
FSITXA_D0	O	FSITX-A Primary Data Output	GPIO6 GPIO9 GPIO26	GPIO6 GPIO9	GPIO6 GPIO9	GPIO6 GPIO9
FSITXA_D1	O	FSITX-A Optional Additional Data Output	GPIO5 GPIO8 GPIO25	GPIO5 GPIO8	GPIO5 GPIO8	GPIO5 GPIO8
I2CA_SCL	I/OD	I2C-A Open-Drain Bidirectional Clock	GPIO1 GPIO8 GPIO18_X2 GPIO27 GPIO33 GPIO37/TDO	GPIO1 GPIO8 GPIO18_X2 GPIO33 GPIO37/TDO	GPIO1 GPIO8 GPIO18_X2 GPIO33 GPIO37/TDO	GPIO1 GPIO8 GPIO18_X2 GPIO33 GPIO37/TDO
I2CA_SDA	I/OD	I2C-A Open-Drain Bidirectional Data	GPIO0 GPIO10 GPIO26 GPIO32 GPIO35/TDI	GPIO0 GPIO10 GPIO32 GPIO35/TDI	GPIO0 GPIO10 GPIO32 GPIO35/TDI	GPIO0 GPIO32 GPIO35/TDI
LINA_RX	I	LIN-A Receive	GPIO29 GPIO33 GPIO35/TDI GPIO59	GPIO29 GPIO33 GPIO35/TDI	GPIO29 GPIO33 GPIO35/TDI	GPIO29 GPIO33 GPIO35/TDI
LINA_TX	O	LIN-A Transmit	GPIO22_VFBSW GPIO28 GPIO32 GPIO37/TDO GPIO58	GPIO22_VFBSW GPIO28 GPIO32 GPIO37/TDO	GPIO22_VFBSW GPIO28 GPIO32 GPIO37/TDO	GPIO22_VFBSW GPIO28 GPIO32 GPIO37/TDO
OUTPUTXBAR1	O	Output X-BAR Output 1	GPIO2 GPIO24 GPIO34 GPIO58	GPIO2 GPIO24	GPIO2 GPIO24	GPIO2 GPIO24
OUTPUTXBAR2	O	Output X-BAR Output 2	GPIO3 GPIO25 GPIO37/TDO GPIO59	GPIO3 GPIO37/TDO	GPIO3 GPIO37/TDO	GPIO3 GPIO37/TDO
OUTPUTXBAR3	O	Output X-BAR Output 3	GPIO4 GPIO5 GPIO14 GPIO26	GPIO4 GPIO5	GPIO4 GPIO5	GPIO4 GPIO5

Copyright © 2026 Texas Instruments Incorporated

Table 5-7. Digital Signals by GPIO (continued)

SIGNAL NAME	PIN TYPE	DESCRIPTION	100 PZ	64 PMQ	64 PM	56 RSH
OUTPUTXBAR4	O	Output X-BAR Output 4	GPIO6 GPIO15 GPIO27 GPIO33	GPIO6 GPIO33	GPIO6 GPIO33	GPIO6 GPIO33
OUTPUTXBAR5	O	Output X-BAR Output 5	GPIO7 GPIO28	GPIO7 GPIO28	GPIO7 GPIO28	GPIO7 GPIO28
OUTPUTXBAR6	O	Output X-BAR Output 6	GPIO9 GPIO29	GPIO9 GPIO29	GPIO9 GPIO29	GPIO9 GPIO29
OUTPUTXBAR7	O	Output X-BAR Output 7	GPIO11 GPIO16 GPIO30	GPIO11 GPIO16	GPIO11 GPIO16	GPIO11 GPIO16
OUTPUTXBAR8	O	Output X-BAR Output 8	GPIO17 GPIO31	GPIO17	GPIO17	GPIO17
PMBUSA_ALERT	I/OD	PMBus-A Open-Drain Bidirectional Alert Signal	GPIO13 GPIO27 GPIO37/TDO	GPIO37/TDO	GPIO13 GPIO37/TDO	GPIO13 GPIO37/TDO
PMBUSA_CTL	I	PMBus-A Control Signal	GPIO12 GPIO18_X2 GPIO26 GPIO35/TDI	GPIO18_X2 GPIO35/TDI	GPIO12 GPIO18_X2 GPIO35/TDI	GPIO12 GPIO18_X2 GPIO35/TDI
PMBUSA_SCL	I/OD	PMBus-A Open-Drain Bidirectional Clock	GPIO3 GPIO15 GPIO16 GPIO24 GPIO35/TDI	GPIO3 GPIO16 GPIO24 GPIO35/TDI	GPIO3 GPIO16 GPIO24 GPIO35/TDI	GPIO3 GPIO16 GPIO24 GPIO35/TDI
PMBUSA_SDA	I/OD	PMBus-A Open-Drain Bidirectional Data	GPIO2 GPIO14 GPIO17 GPIO25 GPIO34 GPIO40	GPIO2 GPIO17	GPIO2 GPIO17	GPIO2 GPIO17
SCIA_RX	I	SCI-A Receive Data	GPIO3 GPIO9 GPIO17 GPIO25 GPIO28 GPIO35/TDI	GPIO3 GPIO9 GPIO17 GPIO28 GPIO35/TDI	GPIO3 GPIO9 GPIO17 GPIO28 GPIO35/TDI	GPIO3 GPIO9 GPIO17 GPIO28 GPIO35/TDI

Copyright © 2026 Texas Instruments Incorporated

Table 5-7. Digital Signals by GPIO (continued)

SIGNAL NAME	PIN TYPE	DESCRIPTION	100 PZ	64 PMQ	64 PM	56 RSH
SCIA_TX	O	SCI-A Transmit Data	GPIO2 GPIO8 GPIO16 GPIO24 GPIO29 GPIO37/TDO	GPIO2 GPIO8 GPIO16 GPIO24 GPIO29 GPIO37/TDO	GPIO2 GPIO8 GPIO16 GPIO24 GPIO29 GPIO37/TDO	GPIO2 GPIO8 GPIO16 GPIO24 GPIO29 GPIO37/TDO
SCIB_RX	I	SCI-B Receive Data	GPIO11 GPIO13 GPIO15 GPIO57	GPIO11	GPIO11 GPIO13	GPIO11 GPIO13
SCIB_TX	O	SCI-B Transmit Data	GPIO9 GPIO10 GPIO12 GPIO14 GPIO18_X2 GPIO22_VFBSW GPIO40 GPIO56	GPIO9 GPIO10 GPIO18_X2 GPIO22_VFBSW	GPIO9 GPIO10 GPIO12 GPIO18_X2 GPIO22_VFBSW	GPIO9 GPIO12 GPIO18_X2 GPIO22_VFBSW
SD1_C1	I	SDFM-1 Channel 1 Clock Input	GPIO17 GPIO25	GPIO17	GPIO17	GPIO17
SD1_C2	I	SDFM-1 Channel 2 Clock Input	GPIO27			
SD1_C3	I	SDFM-1 Channel 3 Clock Input	GPIO29 GPIO33 GPIO57	GPIO29 GPIO33	GPIO29 GPIO33	GPIO29 GPIO33
SD1_C4	I	SDFM-1 Channel 4 Clock Input	GPIO31 GPIO59			
SD1_D1	I	SDFM-1 Channel 1 Data Input	GPIO16 GPIO24	GPIO16 GPIO24	GPIO16 GPIO24	GPIO16 GPIO24
SD1_D2	I	SDFM-1 Channel 2 Data Input	GPIO18_X2 GPIO26	GPIO18_X2	GPIO18_X2	GPIO18_X2
SD1_D3	I	SDFM-1 Channel 3 Data Input	GPIO28 GPIO32 GPIO56	GPIO28 GPIO32	GPIO28 GPIO32	GPIO28 GPIO32
SD1_D4	I	SDFM-1 Channel 4 Data Input	GPIO22_VFBSW GPIO30 GPIO58	GPIO22_VFBSW	GPIO22_VFBSW	GPIO22_VFBSW
SPIA_CLK	I/O	SPI-A Clock	GPIO3 GPIO9 GPIO18_X2 GPIO56	GPIO3 GPIO9 GPIO18_X2	GPIO3 GPIO9 GPIO18_X2	GPIO3 GPIO9 GPIO18_X2
SPIA_SIMO	I/O	SPI-A Slave In, Master Out (SIMO)	GPIO8 GPIO16	GPIO8 GPIO16	GPIO8 GPIO16	GPIO8 GPIO16

Copyright © 2026 Texas Instruments Incorporated

Table 5-7. Digital Signals by GPIO (continued)

SIGNAL NAME	PIN TYPE	DESCRIPTION	100 PZ	64 PMQ	64 PM	56 RSH
SPIA_SOMI	I/O	SPI-A Slave Out, Master In (SOMI)	GPIO10 GPIO17	GPIO10 GPIO17	GPIO10 GPIO17	GPIO17
SPIA_STE	I/O	SPI-A Slave Transmit Enable (STE)	GPIO5 GPIO11 GPIO57	GPIO5 GPIO11	GPIO5 GPIO11	GPIO5 GPIO11
SPIB_CLK	I/O	SPI-B Clock	GPIO14 GPIO22_VFBSW GPIO26 GPIO28 GPIO32 GPIO58	GPIO22_VFBSW GPIO28 GPIO32	GPIO22_VFBSW GPIO28 GPIO32	GPIO22_VFBSW GPIO28 GPIO32
SPIB_SIMO	I/O	SPI-B Slave In, Master Out (SIMO)	GPIO7 GPIO24 GPIO30 GPIO56	GPIO7 GPIO24	GPIO7 GPIO24	GPIO7 GPIO24
SPIB_SOMI	I/O	SPI-B Slave Out, Master In (SOMI)	GPIO6 GPIO25 GPIO31 GPIO57	GPIO6	GPIO6	GPIO6
SPIB_STE	I/O	SPI-B Slave Transmit Enable (STE)	GPIO15 GPIO27 GPIO29 GPIO33 GPIO59	GPIO29 GPIO33	GPIO29 GPIO33	GPIO29 GPIO33
SYNCOUT	O	External ePWM Synchronization Pulse	GPIO6	GPIO6	GPIO6	GPIO6
TDI	I	JTAG Test Data Input (TDI) - TDI is the default mux selection for the pin. The internal pullup is disabled by default. The internal pullup should be enabled or an external pullup added on the board if this pin is used as JTAG TDI to avoid a floating input.	GPIO35/TDI	GPIO35/TDI	GPIO35/TDI	GPIO35/TDI
TDO	O	JTAG Test Data Output (TDO) - TDO is the default mux selection for the pin. The internal pullup is disabled by default. The TDO function will be in a tri-state condition when there is no JTAG activity, leaving this pin floating; the internal pullup should be enabled or an external pullup added on the board to avoid a floating GPIO input.	GPIO37/TDO	GPIO37/TDO	GPIO37/TDO	GPIO37/TDO
VFBSW	-	Internal DC-DC regulator feedback signal. If the internal DC-DC regulator is used, tie this pin to the node where L(VSW) connects to the VDD rail (as close as possible to the device).	GPIO22_VFBSW	GPIO22_VFBSW	GPIO22_VFBSW	GPIO22_VFBSW
VSW	-	Switching output of the internal DC-DC regulator	GPIO23_VSW	GPIO23_VSW	GPIO23_VSW	GPIO23_VSW
X2	I/O	Crystal oscillator output	GPIO18_X2	GPIO18_X2	GPIO18_X2	GPIO18_X2

Copyright © 2026 Texas Instruments Incorporated

Table 5-7. Digital Signals by GPIO (continued)

SIGNAL NAME	PIN TYPE	DESCRIPTION	100 PZ	64 PMQ	64 PM	56 RSH
XCLKOUT	O	External Clock Output. This pin outputs a divided-down version of a chosen clock signal from within the device.	GPIO16 GPIO18_X2	GPIO16 GPIO18_X2	GPIO16 GPIO18_X2	GPIO16 GPIO18_X2

Copyright © 2026 Texas Instruments Incorporated

5.4.2 Digital Inputs on ADC Pins (AIOs)

GPIOs on port H (GPIO224–GPIO255) are multiplexed with analog pins. These are also referred to as AIOs. These pins can only function in input mode. By default, these pins will function as analog pins and the GPIOs are in a high-Z state. The GPHAMSEL register is used to configure these pins for digital or analog operation.

Note

If digital signals with sharp edges (high dv/dt) are connected to the AIOs, cross-talk can occur with adjacent analog signals. The user should therefore limit the edge rate of signals connected to AIOs if adjacent channels are being used for analog functions.

5.4.3 GPIO Input X-BAR

The Input X-BAR is used to route signals from a GPIO to many different IP blocks such as the ADCs, eCAPs, ePWMs, and external interrupts (see Figure 5-5). Table 5-8 lists the input X-BAR destinations. For details on configuring the Input X-BAR, see the Crossbar (X-BAR) chapter of the *TMS320F28004x Real-Time Microcontrollers Technical Reference Manual*.

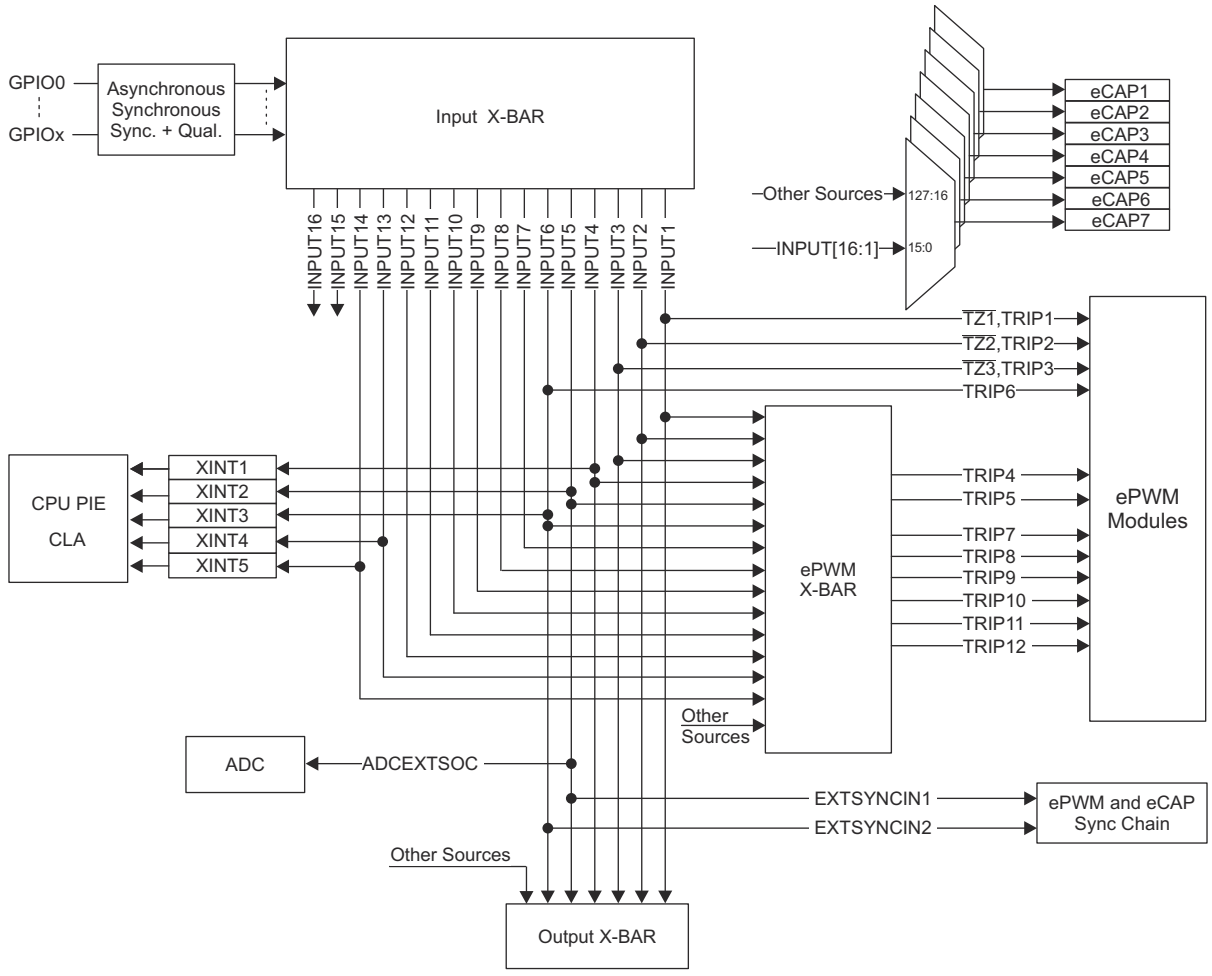

Figure 5-5. Input X-BAR

Table 5-8. Input X-BAR Destinations

INPUT	DESTINATIONS
INPUT1	eCAPx, ePWM X-BAR, ePWM[TZ1,TRIP1], Output X-BAR
INPUT2	eCAPx, ePWM X-BAR, ePWM[TZ2,TRIP2], Output X-BAR
INPUT3	eCAPx, ePWM X-BAR, ePWM[TZ3,TRIP3], Output X-BAR
INPUT4	eCAPx, ePWM X-BAR, XINT1, Output X-BAR
INPUT5	eCAPx, ePWM X-BAR, XINT2, ADCEXTSOC, EXTSYNCIN1, Output X-BAR
INPUT6	eCAPx, ePWM X-BAR, XINT3, ePWM[TRIP6], EXTSYNCIN2, Output X-BAR
INPUT7	eCAPx, ePWM X-BAR
INPUT8	eCAPx, ePWM X-BAR
INPUT9	eCAPx, ePWM X-BAR
INPUT10	eCAPx, ePWM X-BAR
INPUT11	eCAPx, ePWM X-BAR
INPUT12	eCAPx, ePWM X-BAR
INPUT13	eCAPx, ePWM X-BAR, XINT4
INPUT14	eCAPx, ePWM X-BAR, XINT5
INPUT15	eCAPx
INPUT16	eCAPx

Copyright © 2026 Texas Instruments Incorporated

5.4.4 GPIO Output X-BAR and ePWM X-BAR

The Output X-BAR has eight outputs which are routed to the GPIO module. The ePWM X-BAR has eight outputs which are routed to each ePWM module. Figure 5-6 shows the sources for both the Output X-BAR and ePWM X-BAR. For details on the Output X-BAR and ePWM X-BAR, see the Crossbar (X-BAR) chapter of the *TMS320F28004x Real-Time Microcontrollers Technical Reference Manual*.

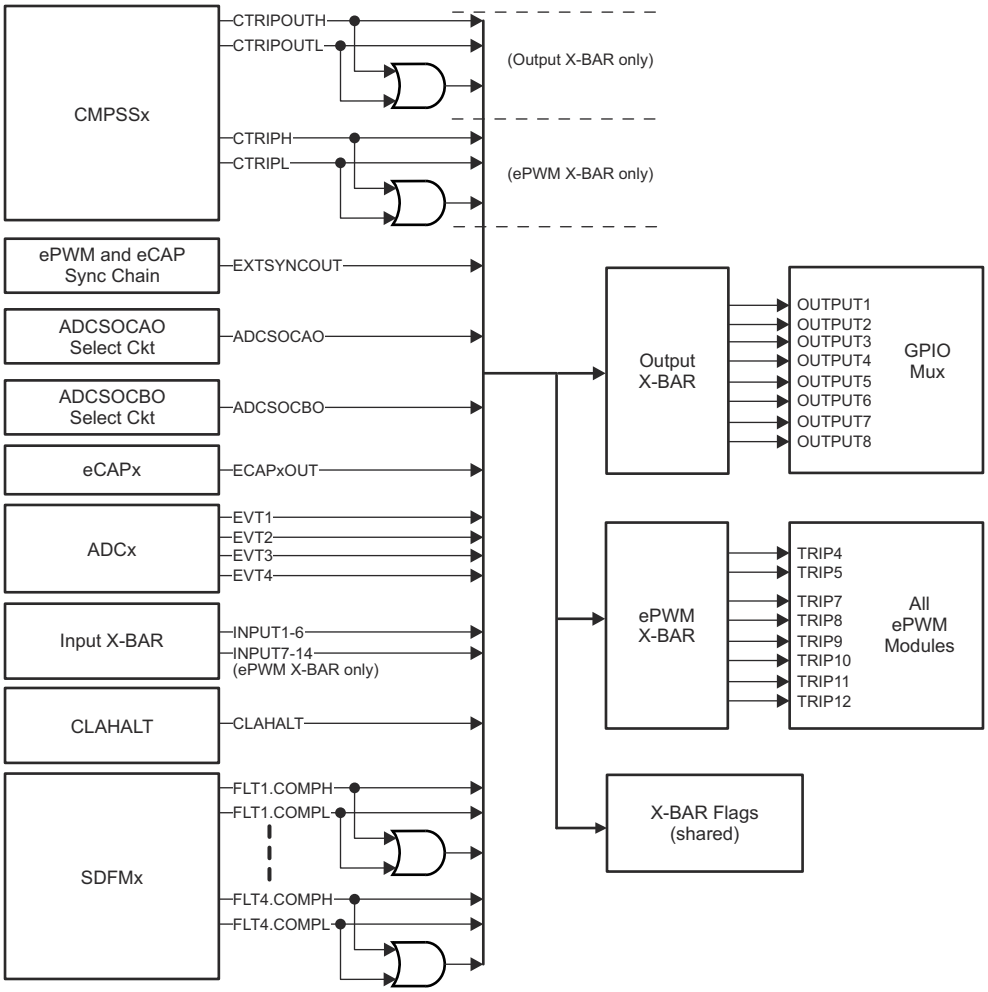

Figure 5-6. Output X-BAR and ePWM X-BAR Sources

5.5 Pins With Internal Pullup and Pulldown

Some pins on the device have internal pullups or pulldowns. Table 5-9 lists the pull direction and when it is active. The pullups on GPIO pins are disabled by default and can be enabled through software. To avoid any floating unbonded inputs, the Boot ROM will enable internal pullups on GPIO pins that are not bonded out in a particular package. Other pins noted in Table 5-9 with pullups and pulldowns are always on and cannot be disabled.

Table 5-9. Pins With Internal Pullup and Pulldown

PIN	RESET (XRSn = 0)	DEVICE BOOT	APPLICATION
GPIOx (including AIOs)	Pullup disabled	Pullup disabled(1)	Application defined
GPIO35/TDI	Pullup disabled		Application defined
GPIO37/TDO	Pullup disabled		Application defined
TCK	Pullup active		
TMS	Pullup active		
VREGENZ	Pulldown active		
XRSn	Pullup active		
Other pins	No pullup or pulldown present		

(1) Pins not bonded out in a given package will have the internal pullups enabled by the Boot ROM.

Copyright © 2026 Texas Instruments Incorporated

5.6 Connections for Unused Pins

For applications that do not need to use all functions of the device, Table 5-10 lists acceptable conditioning for any unused pins. When multiple options are listed in Table 5-10, any option is acceptable. Pins not listed in Table 5-10 must be connected according to Section 5.

Table 5-10. Connections for Unused Pins

SIGNAL NAME	ACCEPTABLE PRACTICE
ANALOG	
Analog input pins with DACx_OUT	• No Connect • Tie to VSSA through 4.7-kΩ or larger resistor
Analog input pins with PGAx_OUTF	• No Connect • Tie to VSSA through 4.7-kΩ or larger resistor
Analog input pins (except for DACx_OUT and PGAx_OUTF)	• No Connect • Tie to VSSA • Tie to VSSA through resistor
PGAx_GND	Tie to VSSA
VREFHIx	Tie to VDDA (applies only if ADC or DAC are not used in the application)
VREFLOx	Tie to VSSA
DIGITAL	
FLT1 (Flash Test pin 1)	• No Connect • Tie to VSS through 4.7-kΩ or larger resistor
FLT2 (Flash Test pin 2)	• No Connect • Tie to VSS through 4.7-kΩ or larger resistor
GPIOx	• No connection (input mode with internal pullup enabled) • No connection (output mode with internal pullup disabled) • Pullup or pulldown resistor (any value resistor, input mode, and with internal pullup disabled)
GPIO35/TDI	When TDI mux option is selected (default), the GPIO is in Input mode. • Internal pullup enabled • External pullup resistor
GPIO37/TDO	When TDO mux option is selected (default), the GPIO is in Output mode only during JTAG activity; otherwise, it is in a tri-state condition. The pin must be biased to avoid extra current on the input buffer. • Internal pullup enabled • External pullup resistor
TCK	• No Connect • Pullup resistor
TMS	Pullup resistor
VREGENZ	Tie to VDDIO if internal regulator is not used
X1	Tie to VSS
X2	No Connect
POWER AND GROUND	
VDD	All VDD pins must be connected per Section 5.3.
VDDA	If a dedicated analog supply is not used, tie to VDDIO.
VDDIO	All VDDIO pins must be connected per Section 5.3.
VDDIO_SW	Always tie to VDDIO.
VSS	All VSS pins must be connected to board ground.
VSS_SW	Always tie to VSS.

Copyright © 2026 Texas Instruments Incorporated

Table 5-10. Connections for Unused Pins (continued)

SIGNAL NAME	ACCEPTABLE PRACTICE
VSSA	If an analog ground is not used, tie to VSS.

Copyright © 2026 Texas Instruments Incorporated

6 Specifications

6.1 Absolute Maximum Ratings

over operating free-air temperature range (unless otherwise noted)(1) (2)

		MIN	MAX	UNIT
Supply voltage	VDDIO with respect to VSS	–0.3	4.6	V
	VDDA with respect to VSSA	–0.3	4.6	
	VDD with respect to VSS	–0.3	1.5	
Voltage difference between VDDIO and VDDIO_SW pins			±0.3	V
Input voltage	V_{IN} (3.3 V)	–0.3	4.6	V
Output voltage	V_O	–0.3	4.6	V
Input clamp current(4)	Digital input (per pin), I_{IK} (V_{IN} < VSS or V_{IN} > VDDIO)	–20	20	mA
	Analog input (per pin), $I_{IKANALOG}$ (V_{IN} < VSSA or V_{IN} > VDDA)	–20	20	
	Total for all inputs, $I_{IKTOTAL}$ (V_{IN} < VSS/VSSA or V_{IN} > VDDIO/VDDA)	–20	20	
Output current	Digital output (per pin), I_{OUT}	–20	20	mA
Free-Air temperature	T_A	–40	125	°C
Operating junction temperature	T_J	–40	150	°C
Storage temperature(3)	T_{stg}	–65	150	°C

(1) Stresses beyond those listed under *Absolute Maximum Ratings* may cause permanent damage to the device. These are stress ratings only, and functional operation of the device at these or any other conditions beyond those indicated under Section 6.4 is not implied. Exposure to absolute-maximum-rated conditions for extended periods may affect device reliability.
(2) All voltage values are with respect to VSS, unless otherwise noted.
(3) Long-term high-temperature storage or extended use at maximum temperature conditions may result in a reduction of overall device life. For additional information, see the *Semiconductor and IC Package Thermal Metrics Application Report*.
(4) Continuous clamp current per pin is ±2 mA. Do not operate in this condition continuously as V_{DDIO}/V_{DDA} voltage may internally rise and impact other electrical specifications.

6.2 ESD Ratings – Commercial

				VALUE	UNIT
F280049, F280049C, F280045, F280041, F280041C in 100-pin PZ package (S temperature range)					
$V_{(ESD)}$	Electrostatic discharge	Human-body model (HBM), per ANSI/ESDA/JEDEC JS-001(1)		±2000	V
		Charged-device model (CDM), per JEDEC specification JESD22-C101 or ANSI/ESDA/JEDEC JS-002(2)	All pins	±500	
			Corner pins on 100-pin PZ: 1, 25, 26, 50, 51, 75, 76, 100	±750	
F280049, F280049C, F280045, F280041, F280041C in 64-pin PM package (S temperature range)					
$V_{(ESD)}$	Electrostatic discharge	Human-body model (HBM), per ANSI/ESDA/JEDEC JS-001(1)		±2000	V
		Charged-device model (CDM), per JEDEC specification JESD22-C101 or ANSI/ESDA/JEDEC JS-002(2)	All pins	±500	
			Corner pins on 64-pin PM: 1, 16, 17, 32, 33, 48, 49, 64	±750	
F280049, F280049C, F280045, F280041, F280041C in 56-pin RSH package (S temperature range)					
$V_{(ESD)}$	Electrostatic discharge	Human-body model (HBM), per ANSI/ESDA/JEDEC JS-001(1)		±2000	V
		Charged-device model (CDM), per JEDEC specification JESD22-C101 or ANSI/ESDA/JEDEC JS-002(2)		±500	

(1) JEDEC document JEP155 states that 500-V HBM allows safe manufacturing with a standard ESD control process.
(2) JEDEC document JEP157 states that 250-V CDM allows safe manufacturing with a standard ESD control process.

Copyright © 2026 Texas Instruments Incorporated

6.3 ESD Ratings – Automotive

				VALUE	UNIT
F280049-Q1, F280049C-Q1, F280041-Q1, F280041C-Q1 in 100-pin PZ package (Q temperature range)					
$V_{(ESD)}$	Electrostatic discharge	Human body model (HBM), per AEC Q100-002[1]	All pins	±2000	V
		Charged device model (CDM), per AEC Q100-011	All pins	±500	
			Corner pins on 100-pin PZ: 1, 25, 26, 50, 51, 75, 76, 100	±750	
F280048-Q1, F280048C-Q1, F280040-Q1, F280040C-Q1 in 64-pin PM package (Q temperature range)					
$V_{(ESD)}$	Electrostatic discharge	Human body model (HBM), per AEC Q100-002[1]	All pins	±2000	V
		Charged device model (CDM), per AEC Q100-011	All pins	±500	
			Corner pins on 64-pin PM: 1, 16, 17, 32, 33, 48, 49, 64	±750	

(1) AEC Q100-002 indicates HBM stressing is done in accordance with the ANSI/ESDA/JEDEC JS-001 specification.

6.4 Recommended Operating Conditions

		MIN	NOM	MAX	UNIT
Device supply voltage, VDDIO and VDDA	Internal BOR enabled[3]	$V_{BOR-VDDIO}$(MAX) + V_{BOR-GB} [2]	3.3	3.63	V
	Internal BOR disabled	2.8	3.3	3.63	
Device supply voltage, VDD		1.14	1.2	1.32	V
Device ground, VSS			0		V
Analog ground, VSSA			0		V
SR_{SUPPLY}	Supply ramp rate[4]				
$t_{VDDIO-RAMP}$	VDDIO supply ramp time from 1 V to $V_{BOR-VDDIO}$(MAX)			10	ms
V_{BOR-GB}	VDDIO BOR guard band[5]		0.1		V
Junction temperature, T_J	S version[1]	–40		125	°C
Free-Air temperature, T_A	Q version[1] (AEC Q100 qualification)	–40		125	°C

(1) Operation above T_J = 105°C for extended duration will reduce the lifetime of the device. See *Calculating Useful Lifetimes of Embedded Processors* for more information.
(2) The VDDIO BOR voltage ($V_{BOR-VDDIO}$[MAX]) in Electrical Characteristics determines the lower voltage bound for device operation. TI recommends that system designers budget an additional guard band (V_{BOR-GB}) as shown in Figure 6-1.
(3) Internal BOR is enabled by default.
(4) See the *Power Management Module Operating Conditions* table.
(5) TI recommends V_{BOR-GB} to avoid BOR resets due to normal supply noise or load-transient events on the 3.3-V VDDIO system regulator. Good system regulator design and decoupling capacitance (following the system regulator specifications) are important to prevent activation of the BOR during normal device operation. The value of V_{BOR-GB} is a system-level design consideration; the voltage listed here is typical for many applications.

Copyright © 2026 Texas Instruments Incorporated

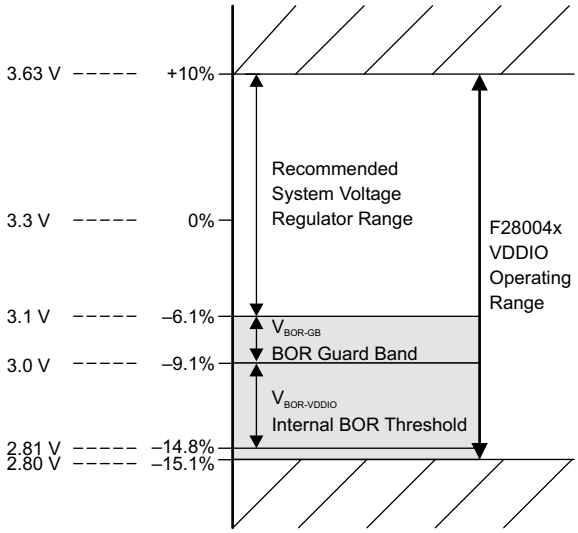

Copyright © 2017, Texas Instruments Incorporated

Figure 6-1. Supply Voltages

6.5 Power Consumption Summary

Current values listed in this section are representative for the test conditions given and not the absolute maximum possible. The actual device currents in an application will vary with application code and pin configurations. Section 6.5.1 lists the system current consumption values for an external supply. Section 6.5.2 lists the system current consumption values for the internal VREG. Section 6.5.3 lists the system current consumption values for the DCDC. See Section 6.5.4 for a detailed description of the test case run while measuring the current consumption in operating mode.

6.5.1 System Current Consumption (External Supply)

over operating free-air temperature range (unless otherwise noted).
TYP : V_{nom}, 30°C

PARAMETER		TEST CONDITIONS	MIN	TYP	MAX	UNIT
OPERATING MODE						
I_{DD}	VDD current consumption during operational usage(1)	See Section 6.5.4.		61	90	mA
I_{DDIO}	VDDIO current consumption during operational usage			26	45	mA
I_{DDA}	VDDA current consumption during operational usage			12	30	mA
IDLE MODE						
I_{DD}	VDD current consumption while device is in Idle mode(1)	• CPU is in IDLE mode • Flash is powered down • XCLKOUT is turned off		18	40	mA
I_{DDIO}	VDDIO current consumption while device is in Idle mode			1.2	4	mA
I_{DDA}	VDDA current consumption while device is in Idle mode			0.9	1.2	mA
HALT MODE						
I_{DD}	VDD current consumption while device is in Halt mode(1)	• CPU is in HALT mode • Flash is powered down • XCLKOUT is turned off		0.9	20	mA
I_{DDIO}	VDDIO current consumption while device is in Halt mode			0.8	4	mA
I_{DDA}	VDDA current consumption while device is in Halt mode			0.2	0.5	mA
FLASH ERASE/PROGRAM						
I_{DD}	VDD Current consumption during Erase/Program cycle(1) (2)	• CPU is running from Flash, performing Erase and Program on the unused sector. • VREG is disabled. • SYSCLK is running at 100 MHz. • I/Os are inputs with pullups enabled. • Peripheral clocks are turned OFF.		40	70	mA
I_{DDIO}	VDDIO Current consumption during Erase/Program cycle(2)			33	75	mA
I_{DDA}	VDDA Current consumption during Erase/Program cycle			0.1	2.5	mA

(1) IDD MAX is reported with VDD at MAX Recommended Operating Conditions. For the Internal VREG and DCDC tables this VDD supply will be at the regulated VDD TYP voltage. For this reason, current values reported in this External Supply Table will appear elevated compared to the Internal VREG and DCDC tables.

(2) Brownout events during flash programming can corrupt flash data and permanently lock the device. Programming environments using alternate power sources (such as a USB programmer) must be capable of supplying the rated current for the device and other system components with sufficient margin to avoid supply brownout conditions.

Copyright © 2026 Texas Instruments Incorporated

6.5.2 System Current Consumption (Internal VREG)

over operating free-air temperature range (unless otherwise noted).
TYP : V_{nom}, 30°C

PARAMETER		TEST CONDITIONS	MIN	TYP	MAX	UNIT
OPERATING MODE						
I_{DDIO}	VDDIO current consumption during operational usage	See Section 6.5.4.		86	113	mA
I_{DDA}	VDDA current consumption during operational usage			12	30	mA
IDLE MODE						
I_{DDIO}	VDDIO current consumption while device is in Idle mode	• CPU is in IDLE mode • Flash is powered down • XCLKOUT is turned off		19.2	36	mA
I_{DDA}	VDDA current consumption while device is in Idle mode			0.9	1.2	mA
HALT MODE						
I_{DDIO}	VDDIO current consumption while device is in Halt mode	• CPU is in HALT mode • Flash is powered down • XCLKOUT is turned off		1.7	18	mA
I_{DDA}	VDDA current consumption while device is in Halt mode			0.2	0.5	mA
FLASH ERASE/PROGRAM						
I_{DDIO}	VDDIO current consumption during Erase/Program cycle(1)	• CPU is running from Flash, performing Erase and Program on the unused sector. • Internal VREG is enabled. • SYSCLK is running at 100 MHz. • I/Os are inputs with pullups enabled. • Peripheral clocks are turned OFF.		72	106	mA
I_{DDA}	VDDA current consumption during Erase/Program cycle			0.1	2.5	mA

(1) Brownout events during flash programming can corrupt flash data and permanently lock the device. Programming environments using alternate power sources (such as a USB programmer) must be capable of supplying the rated current for the device and other system components with sufficient margin to avoid supply brownout conditions.

Copyright © 2026 Texas Instruments Incorporated

6.5.3 System Current Consumption (DCDC)

over operating free-air temperature range (unless otherwise noted).
TYP : V_{nom}, 30°C

PARAMETER		TEST CONDITIONS	MIN	TYP	MAX	UNIT
OPERATING MODE						
I_{DDIO}	VDDIO current consumption during operational usage	See Section 6.5.4.		52	70	mA
I_{DDA}	VDDA current consumption during operational usage			12	30	mA
IDLE MODE						
I_{DDIO}	VDDIO current consumption while device is in Idle mode	• CPU is in IDLE mode • Flash is powered down • XCLKOUT is turned off		9.2	28	mA
I_{DDA}	VDDA current consumption while device is in Idle mode			0.9	1.5	mA
HALT MODE						
I_{DDIO}	VDDIO current consumption while device is in Halt mode	• CPU is in HALT mode • Flash is powered down • XCLKOUT is turned off		1.7	17	mA
I_{DDA}	VDDA current consumption while device is in Halt mode			0.2	1.5	mA
FLASH ERASE/PROGRAM						
I_{DDIO}	VDDIO current consumption during Erase/Program cycle(1)	• CPU is running from Flash, performing Erase and Program on the unused sector. • DCDC is enabled. • SYSCLK is running at 100 MHz. • I/Os are inputs with pullups enabled. • Peripheral clocks are turned OFF.		60	85	mA
I_{DDA}	VDDA current consumption during Erase/Program cycle			0.25	2.5	mA

(1) Brownout events during flash programming can corrupt flash data and permanently lock the device. Programming environments using alternate power sources (such as a USB programmer) must be capable of supplying the rated current for the device and other system components with sufficient margin to avoid supply brownout conditions.

Copyright © 2026 Texas Instruments Incorporated

6.5.4 Operating Mode Test Description

Section 6.5.1, Section 6.5.2, and Section 6.5.3 list the current consumption values for the operational mode of the device. The operational mode provides an estimation of what an application might encounter. The test case run to achieve the values shown does the following in a loop. Peripherals that are not on the following list have had their clocks disabled.

- Code is executing from RAM.
- FLASH is read and kept in active state.
- No external components are driven by I/O pins.
- All of the communication peripherals are exercised: SPI-A to SPI-C; SCI-A to SCI-C; I2C-A; CAN-A to CAN-C; LIN-A; PMBUS-A; and FSI-A.
- ePWM-1 to ePWM-3 generate a 5-MHz output on 6 pins.
- ePWM-4 to ePWM-7 are in HRPWM mode and generating 25 MHz on 6 pins.
- CPU timers are active.
- CPU does FIR16 calculations.
- DMA does continuous 32-bit transfers.
- CLA-1 is executing a 1024-point DFT in a background task.
- All ADCs perform continuous conversions.
- All DACs vary voltage at the loop frequency ~11 kHz.
- All PGAs are enabled.
- All CMPSSs generate a square wave with a 100-kHz frequency.
- SDFM peripheral clock is enabled.
- eCAP-1 to eCAP-7 are in APWM mode, toggling at 250 kHz.
- All eQEP watchdogs are enabled and counting.
- System watchdog is enabled and counting.

Copyright © 2026 Texas Instruments Incorporated

6.5.5 Current Consumption Graphs

Figure 6-2, Figure 6-3, and Figure 6-4 show a typical representation of the relationship between frequency and current consumption on the device. The operational test from Section 6.5.1 was run across frequency at V_{NOM} and room temperature. Actual results will vary based on the system implementation and conditions.

Leakage current on the VDD core supply will increase with operating temperature in an exponential manner as seen in Figure 6-5. The current consumption in HALT mode is primarily leakage current as there is no active switching if the internal oscillator has been powered down.

Figure 6-5 shows the typical leakage current across temperature. The device was placed into HALT mode under nominal voltage conditions.

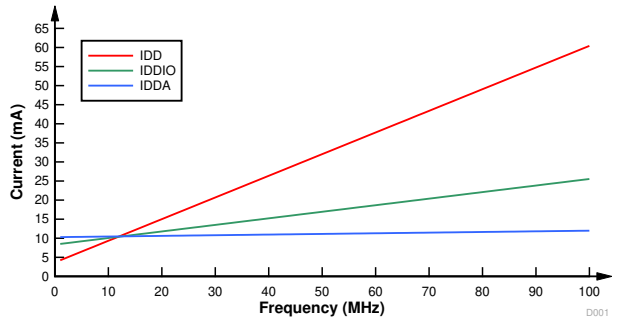

Figure 6-2. Current Versus Frequency — External Supply

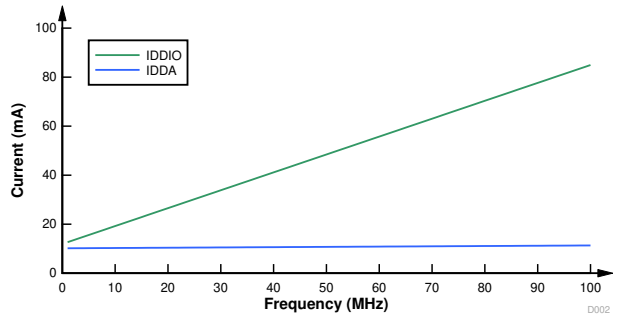

Figure 6-3. Current Versus Frequency — Internal VREG

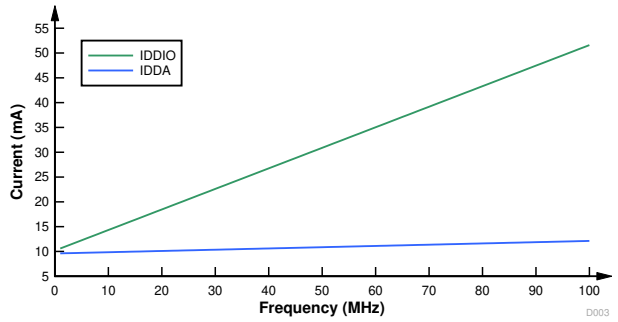

Figure 6-4. Current Versus Frequency — DCDC

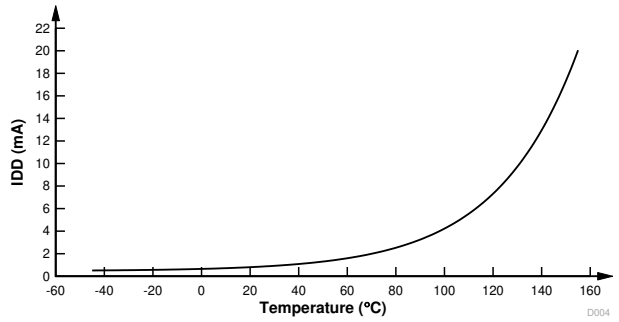

Figure 6-5. Halt Current Versus Temperature (°C)

Copyright © 2026 Texas Instruments Incorporated

6.5.6 Reducing Current Consumption

All C2000™ microcontrollers provide some methods to reduce the device current consumption:

- Either of the two low-power modes—IDLE and HALT—could be entered to reduce the current consumption even further during idle periods in the application.
- The flash module may be powered down if the code is run from RAM.
- Disable the pullups on pins that assume an output function.
- Each peripheral has an individual clock-enable bit (PCLKCRx). Reduced current consumption may be achieved by turning off the clock to any peripheral that is not used in a given application. Section 6.5.6.1 lists the typical current consumption value per peripheral at 100-MHz SYSCLK.
- To realize the lowest VDDA current consumption in an LPM, see the respective analog chapter of the *TMS320F28004x Real-Time Microcontrollers Technical Reference Manual* to ensure each module is powered down as well.

6.5.6.1 Typical I_{DD} Current Reduction per Disabled Peripheral (at 100-MHz SYSCLK)

PERIPHERAL(1)	I_{DD} CURRENT REDUCTION (mA)
ADC(2)	0.8
CAN	1.1
CLA	0.4
CLB	1.1
CMPSS(2)	0.4
CPU TIMER	0.1
DAC(2)	0.2
DMA	0.5
eCAP1 to eCAP5	0.1
eCAP6 to eCAP7(3)	0.4
ePWM	0.7
eQEP	0.1
FSI	0.7
HRPWM	0.8
I2C	0.3
LIN	0.4
PGA(2)	0.2
PMBUS	0.3
SCI	0.2
SDFM	0.9
SPI	0.2
DCC	0.1
PLL at 100 MHz	22.9

(1) All peripherals are disabled upon reset. Use the PCLKCRx register to individually enable peripherals. For peripherals with multiple instances, the current quoted is for a single module.
(2) This current represents the current drawn by the digital portion of the each module.
(3) eCAP6 and eCAP7 can also be configured as HRCAP.

Copyright © 2026 Texas Instruments Incorporated

6.6 Electrical Characteristics

over recommended operating conditions (unless otherwise noted)

PARAMETER			TEST CONDITIONS	MIN	TYP	MAX	UNIT
Digital and Analog IO							
V_{OH}	High-level output voltage		I_{OH} = I_{OH} MIN	VDDIO * 0.8			V
			I_{OH} = –100 µA	VDDIO – 0.2			
V_{OL}	Low-level output voltage		I_{OL} = I_{OL} MAX			0.4	V
			I_{OL} = 100 µA			0.2	
I_{OH}	High-level output source current for all output pins			–4			mA
I_{OL}	Low-level output sink current for all output pins					4	mA
R_{OH}	High-level output impedance for all output pins				70		Ω
R_{OL}	Low-level output impedance for all output pins				70		Ω
V_{IH}	High-level input voltage (3.3 V)			2.0		VDDIO + 0.3	V
V_{IL}	Low-level input voltage (3.3 V)			VSS – 0.3		0.8	V
$V_{HYSTERESIS}$	Input hysteresis			150			mV
$I_{PULLDOWN}$	Input current	Inputs with pulldown(1)	VDDIO = 3.3 V V_{IN} = VDDIO		100		µA
I_{PULLUP}	Input current	Digital inputs with pullup enabled(1)	VDDIO = 3.3 V V_{IN} = 0 V		160		µA
		Analog inputs with pullup enabled(1)	VDDA = 3.3 V V_{IN} = 0 V		160		
I_{LEAK}	Pin leakage	All GPIOs except GPIO23_VSW	Pullups and outputs disabled 0 V ≤ V_{IN} ≤ VDDIO			2	µA
		GPIO23_VSW				45	
		Analog pins (except ADCINB3/VDAC and PGAx_OF)	Analog drivers disabled 0 V ≤ V_{IN} ≤ VDDA			0.1	
		ADCINB3/VDAC			2	11	
		PGAx_OF				0.25	
C_I	Input capacitance	All digital GPIOs except GPIO23_VSW			2		pF
		GPIO23_VSW			100		
		Analog pins(2)					
VREG, DC-DC, and BOR							
$V_{POR-VDDIO}$	VDDIO power on reset voltage				2.3		V
$V_{BOR-VDDIO}$	VDDIO brown out reset voltage			2.81		3.0	V
V_{VREG}	Internal voltage regulator output		Internal VREG On		1.2		V
V_{DC-DC}	Internal switching regulator output		Internal DC-DC On		1.2		V
Efficiency	Power efficiency of internal DC-DC switching regulator			80%			

(1) See Table 5-9 for a list of pins with a pullup or pulldown.
(2) The analog pins are specified separately; see Table 6-17.

Copyright © 2026 Texas Instruments Incorporated

6.7 Thermal Resistance Characteristics

6.7.1 PZ Package

		°C/W(1)	AIR FLOW (lfm)(2)
$R\Theta_{JC}$	Junction-to-case thermal resistance	7.6	N/A
$R\Theta_{JB}$	Junction-to-board thermal resistance	24.2	N/A
$R\Theta_{JA}$ (High k PCB)	Junction-to-free air thermal resistance	46.1	0
$R\Theta_{JMA}$	Junction-to-moving air thermal resistance	37.3	150
		34.8	250
		32.6	500
Psi_{JT}	Junction-to-package top	0.2	0
		0.4	150
		0.4	250
		0.6	500
Psi_{JB}	Junction-to-board	23.8	0
		22.8	150
		22.4	250
		21.9	500

(1) These values are based on a JEDEC-defined 2S2P system (with the exception of the Theta JC [$R\Theta_{JC}$] value, which is based on a JEDEC-defined 1S0P system) and will change based on environment as well as application. For more information, see these EIA/JEDEC standards:

- JESD51-2, *Integrated Circuits Thermal Test Method Environmental Conditions - Natural Convection (Still Air)*
- JESD51-3, *Low Effective Thermal Conductivity Test Board for Leaded Surface Mount Packages*
- JESD51-7, *High Effective Thermal Conductivity Test Board for Leaded Surface Mount Packages*
- JESD51-9, *Test Boards for Area Array Surface Mount Package Thermal Measurements*

(2) lfm = linear feet per minute

Copyright © 2026 Texas Instruments Incorporated

6.7.2 PM Package

		°C/W(1)	AIR FLOW (lfm)(2)
$R\Theta_{JC}$	Junction-to-case thermal resistance	12.4	N/A
$R\Theta_{JB}$	Junction-to-board thermal resistance	25.6	N/A
$R\Theta_{JA}$ (High k PCB)	Junction-to-free air thermal resistance	51.8	0
$R\Theta_{JMA}$	Junction-to-moving air thermal resistance	42.2	150
		39.4	250
		36.5	500
Psi_{JT}	Junction-to-package top	0.5	0
		0.9	150
		1.1	250
		1.4	500
Psi_{JB}	Junction-to-board	25.1	0
		23.8	150
		23.4	250
		22.7	500

(1) These values are based on a JEDEC-defined 2S2P system (with the exception of the Theta JC [$R\Theta_{JC}$] value, which is based on a JEDEC-defined 1S0P system) and will change based on environment as well as application. For more information, see these EIA/JEDEC standards:

- JESD51-2, *Integrated Circuits Thermal Test Method Environmental Conditions - Natural Convection (Still Air)*
- JESD51-3, *Low Effective Thermal Conductivity Test Board for Leaded Surface Mount Packages*
- JESD51-7, *High Effective Thermal Conductivity Test Board for Leaded Surface Mount Packages*
- JESD51-9, *Test Boards for Area Array Surface Mount Package Thermal Measurements*

(2) lfm = linear feet per minute

Copyright © 2026 Texas Instruments Incorporated

6.7.3 RSH Package

		°C/W(1)	AIR FLOW (lfm)(2)
$R\Theta_{JC}$	Junction-to-case thermal resistance	11.9	N/A
$R\Theta_{JB}$	Junction-to-board thermal resistance	3.3	N/A
$R\Theta_{JA}$ (High k PCB)	Junction-to-free air thermal resistance	25.8	0
$R\Theta_{JMA}$	Junction-to-moving air thermal resistance	17.4	150
		15.1	250
		13.4	500
Psi_{JT}	Junction-to-package top	0.2	0
		0.3	150
		0.4	250
		0.4	500
Psi_{JB}	Junction-to-board	3.3	0
		3.2	150
		3.2	250
		3.2	500
$R\Theta_{JC}$, bottom	Junction-to-bottom case thermal resistance	0.7	0

(1) These values are based on a JEDEC-defined 2S2P system (with the exception of the Theta JC [$R\Theta_{JC}$] value, which is based on a JEDEC-defined 1S0P system) and will change based on environment as well as application. For more information, see these EIA/JEDEC standards:

- JESD51-2, *Integrated Circuits Thermal Test Method Environmental Conditions - Natural Convection (Still Air)*
- JESD51-3, *Low Effective Thermal Conductivity Test Board for Leaded Surface Mount Packages*
- JESD51-7, *High Effective Thermal Conductivity Test Board for Leaded Surface Mount Packages*
- JESD51-9, *Test Boards for Area Array Surface Mount Package Thermal Measurements*

(2) lfm = linear feet per minute

6.8 Thermal Design Considerations

Based on the end application design and operational profile, the I_{DD} and I_{DDIO} currents could vary. Systems that exceed the recommended maximum power dissipation in the end product may require additional thermal enhancements. Ambient temperature (T_A) varies with the end application and product design. The critical factor that affects reliability and functionality is T_J, the junction temperature, not the ambient temperature. Hence, care should be taken to keep T_J within the specified limits. T_{case} should be measured to estimate the operating junction temperature T_J. T_{case} is normally measured at the center of the package top-side surface. The thermal application report *Semiconductor and IC Package Thermal Metrics* helps to understand the thermal metrics and definitions.

Copyright © 2026 Texas Instruments Incorporated

6.9 System

6.9.1 Power Management Module (PMM)

6.9.1.1 Introduction

The Power Management Module (PMM) handles all the power management functions required for device operation.

6.9.1.2 Overview

The block diagram of the PMM is shown in Figure 6-6. As can be seen, the PMM comprises of various subcomponents, which are described in the subsequent sections.

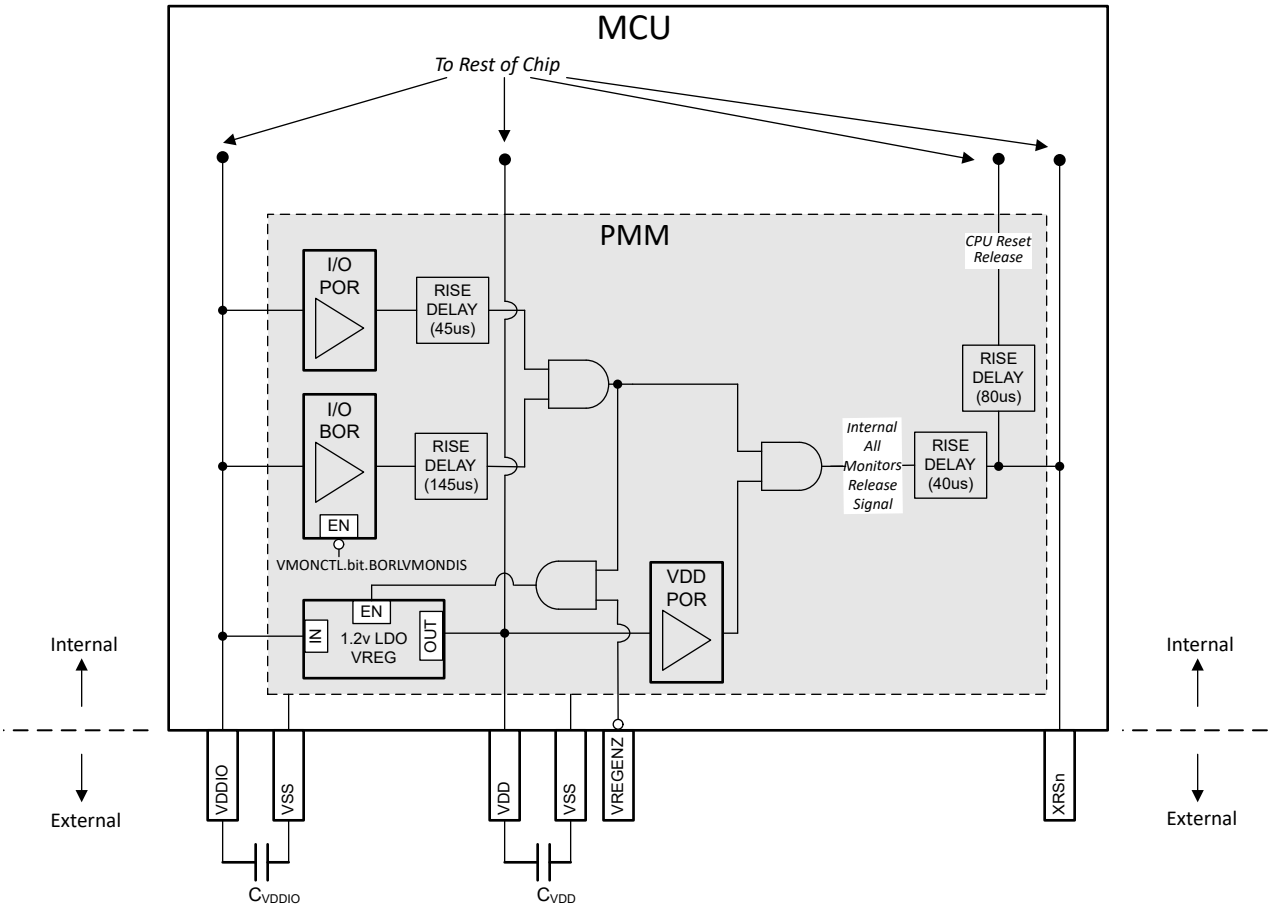

Figure 6-6. PMM Block Diagram

6.9.1.2.1 Power Rail Monitors

The PMM has voltage monitors on the supply rails that release the XRSn signal high once the voltages cross the set threshold during power up. They also function to trip the XRSn signal low if any of the voltages drop below the programmed levels. The various voltage monitors are described in subsequent sections.

Note

Not all the voltage monitors are supported for device operation in an application after boot up. In the case where a voltage monitor is not supported, an external supervisor is recommended if the device needs supply voltage monitoring while the application is running.

The three voltage monitors (I/O POR, I/O BOR, VDD POR) all have to release their respective outputs before the device begins operation (that is, XRSn goes high). However, if any of the voltage monitors trips, XRSn is driven low. The I/Os are held in high impedance when any of the voltage monitors trip.

Copyright © 2026 Texas Instruments Incorporated

6.9.1.2.1.1 I/O POR (Power-On Reset) Monitor

The I/O POR monitor supervises the VDDIO rail. During power up, this is the first monitor to release (that is, first to untrip) on VDDIO.

Note

The level at which the I/O POR trips is well below the minimum recommended voltage for VDDIO, and therefore should not be used for device supervision.

6.9.1.2.1.2 I/O BOR (Brown-Out Reset) Monitor

The I/O BOR monitor also supervises the VDDIO rail. During power up, this is the second monitor to release (that is, second to untrip) on VDDIO. This monitor has a tighter tolerance compared to the I/O POR.

Any drop in voltage below the recommended operating voltages will trip the I/O BOR and reset the device but this can be disabled by setting VMONCTL.bit.BORLVMONDIS to 1. The I/O BOR can only be disabled after the device has fully booted up. If the I/O BOR is disabled, the I/O POR will reset the device for voltage drops.

Figure 6-7 shows the operating region of the I/O BOR.

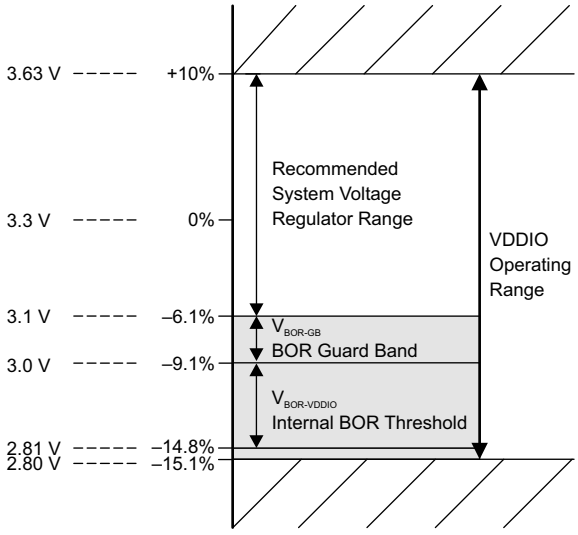

Figure 6-7. I/O BOR Operating Region

6.9.1.2.1.3 VDD POR (Power-On Reset) Monitor

The VDD POR monitor supervises the VDD rail. During power up, this monitor releases (that is, untrips) once the voltage crosses the programmed trip level on VDD.

Note

VDD POR is programmed at a level below the minimum recommended voltage for VDD, and therefore it should not be relied upon for VDD supervision if that is required in the application.

6.9.1.2.2 External Supervisor Usage

VDDIO Monitoring: The I/O BOR feature can be used for I/O rail monitoring as long as it meets the application requirement.

VDD Monitoring:

- VDD supplied from the internal VREG: The VDD supply is derived from the VDDIO supply. The VREG is designed in such a way that a valid VDDIO supply(monitored by the IO BOR) implies a valid VDD supply.
- VDD supplied from an external supply: The VDD POR is not supported for application use. If VDD monitoring is required by the application, an external supervisor can be used to monitor the VDD rail.

Copyright © 2026 Texas Instruments Incorporated

Note

The use of an external supervisor with the internal VREG is not supported.If VDD monitoring is required by the application, a package with a VREGENZ pin must be used to power VDD externally.

6.9.1.2.3 Delay Blocks

The delay blocks in the path of the voltage monitors work together to delay the release time between the voltage monitors and XRSn. This is to ensure that the voltages are stable when XRSn releases. The delay blocks are only active during power up (that is, when VDDIO and VDD are ramping up).

The delay blocks contribute to the minimum slew rates specified in Power Management Module Electrical Data and Timing for the power rails.

Note

The delay numbers specified in the block diagram are typical numbers.

6.9.1.2.4 Internal VDD LDO Voltage Regulator (VREG)

The internal VREG is supplied by the VDDIO rail and can generate the required output to power the VDD pins. It is enabled by tying the VREGENZ pin low. Although the internal VREG eliminates the need to use an external supply for VDD, decoupling capacitors are still required on the VDD pins for VREG stability and transients. See the *VDD Decoupling* section for details.

6.9.1.2.5 VREGENZ

The VREGENZ (VREG disable) pin controls the state of the internal VREG. To enable the internal VREG, connect the VREGENZ pin to a logic low voltage. For applications supplying VDD externally (external VREG), disable the internal VREG by tying the VREGENZ pin high.

Note

Not all device packages have VREGENZ pinned out. For packages without VREGENZ, external VREG mode is not supported.

6.9.1.2.6 Internal 1.2-V Switching Regulator (DC-DC)

The internal DC-DC regulator offers increased efficiency over the LDO for converting 3.3 V to 1.2 V. The internal DC-DC regulator is supplied by the VDDIO_SW pin and generates the 1.2 V required to power the VDD pins. To use the internal switching regulator, the core domain must power up initially using the internal LDO VREG supply (tie the VREGENZ pin low to VSS) and then transition to the DC-DC regulator through application software by setting the DCDCEN bit in the DCDCCTL register. VREGENZ must still be kept low after transition since it controls both the DC-DC and LDO. Tying VREGENZ high disables both the DC-DC and LDO. The DC-DC regulator also requires external components (inductor, input capacitance, and output capacitance). The output of internal DC-DC regulator is not internally fed to the VDD rail and requires an external connection. Figure 6-8 shows the schematic implementation.

Copyright © 2026 Texas Instruments Incorporated

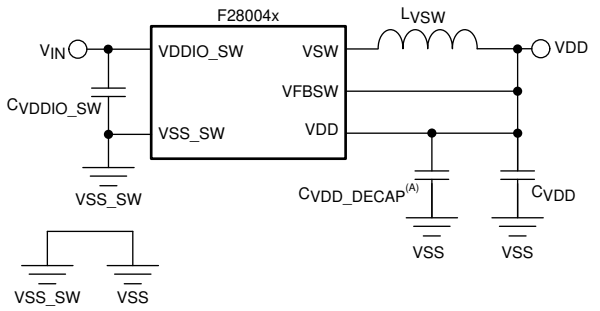

Copyright © 2017, Texas Instruments Incorporated

A. One decoupling capacitor per each of the four VDD pins

Figure 6-8. DC-DC Circuit Schematic

The VDDIO_SW supply pin (V_{IN}) requires a 3.3-V level voltage. A total input capacitance (C_{VDDIO_SW}) of 20 µF is required on VDDIO_SW. Due to the capacitor specification requirements detailed in Table 6-2, two parallel 10-µF capacitors in parallel is the recommended configuration. Decoupling capacitors of 100 nF should also be placed on each VDD pin as close to the device as possible.

Table 6-1. DC-DC Inductor (L_{VSW}) Specifications Requirements

VALUE AND VARIATION	VALUE AT SATURATION	DCR	RATED CURRENT	SATURATION CURRENT	TEMPERATURE
2.2 µH ± 20%	1.54 µH ± 20%	80 mΩ ± 25%	>1000 mA	>600 mA	–40°C to 125°C

Table 6-2. DC-DC Capacitor (C_{VDDIO_SW} and C_{VDD}) Specifications Requirements

VALUE AND VARIATION AT 0 V	VALUE AT 1.2 V	VALUE AT 125°C	ESR	RATED VOLTAGE	TEMPERATURE
10 µF ± 20%	10 µF ± 20%	8 µF ± 20%	<10 mΩ	4 V or 6.3 V	–40°C to 125°C

Table 6-3. DC-DC Circuit Component Values

COMPONENT	MIN	NOM	MAX	UNIT	NOTES
Inductor	1.76	2.2	2.64	µH	20% variance
Input capacitor	8	10	12	µF	20% variance, two such capacitors in parallel
Output capacitor	8	10	12	µF	20% variance, two such capacitors in parallel

6.9.1.2.6.1 PCB Layout and Component Guidelines

For optimal performance the application board layout and component selection is important. The list that follows is a high-level guideline for laying out the DC-DC circuit.

- TI recommends star-connecting VDDIO_SW and VDDIO to the same 3.3-V supply.
- All external components should be placed as close to the pins as possible.
- The loop formed by the VDDIO_SW, input capacitor (C_{VDDIO_SW}), and VSS_SW must be as short as possible.
- The feedback trace must be as short as possible and kept away from any noise source such as the switching output (VSW).
- It is necessary to have a separate island or surgical cut in the ground plane for the input cap (C_{VDDIO_SW}) and VSS_SW.
- A VDD plane is recommended for connecting the VDD node to the L_{VSW}-C_{VDD} point to minimize parasitic resistance and inductance.

6.9.1.3 External Components

6.9.1.3.1 Decoupling Capacitors

VDDIO and VDD require decoupling capacitors for correct operation. The requirements are outlined in subsequent sections.

6.9.1.3.1.1 VDDIO Decoupling

Place a minimum amount of decoupling capacitance on VDDIO. See the C_{VDDIO} parameter in Power Management Module Electrical Data and Timing. The actual amount of decoupling capacitance to use is a requirement of the power supply driving VDDIO. Either of the configurations outlined below is acceptable:

- **Configuration 1:** Place a decoupling capacitor on each VDDIO pin per the C_{VDDIO} parameter.
- **Configuration 2:** Install a single decoupling capacitor that is the equivalent of C_{VDDIO} * VDDIO pins.

Note

Having the decoupling capacitor or capacitors close to the device pins is critical.

Copyright © 2026 Texas Instruments Incorporated

6.9.1.3.1.2 VDD Decoupling

Place a minimum amount of decoupling capacitance on VDD. See the C_{VDD} TOTAL parameter in Power Management Module Electrical Data and Timing.

Either of the configurations outlined below is acceptable:

- **Configuration 1:** Divide C_{VDD} TOTAL equally across the VDD pins. This option may be used in internal VREG mode where it may be impossible to connect all the VDD pins together on the PCB. Refer to Supply Pins Ganging section.
- **Configuration 2:** Install a single decoupling capacitor with value of C_{VDD} TOTAL. In this configuration, all VDD pins must be connected to each other on the PCB.

Note

Having the decoupling capacitor or capacitors close to the device pins is critical.

6.9.1.4 Power Sequencing

6.9.1.4.1 Supply Pins Ganging

Connecting all 3.3-V rails together and supplying from a single source are strongly recommended. This list includes:

- VDDIO
- VDDA

In addition, connect all power pins to avoid leaving any unconnected.

In internal VREG mode, tying the VDD pins together is optional as long as each VDD pin has a capacitor connected to pin. See the *VDD Decoupling* section for VDD decoupling configurations.

The analog modules on the device have fairly high PSRR; therefore, in most cases, noise on VDDA will have to exceed the recommended operating conditions of the supply rails before the analog modules see performance degradation. Therefore, supplying VDDA separately typically offers minimal benefits. Nevertheless, for the purposes of noise improvement, placing a pi filter between VDDIO and VDDA is acceptable.

Note

All the supply pins per rail are tied together internally. For example, all VDDIO pins are tied together internally, all VDD pins are tied together internally, and so forth.

6.9.1.4.2 Signal Pins Power Sequence

Before powering the device, do not apply voltage larger than 0.3 V above VDDIO or 0.3 V below VSS to any digital pin and 0.3 V above VDDA or 0.3 V below VSSA to any analog pin (including VREFHI). This sequencing is still required even if VDDIO and VDDA are not tied together.

CAUTION

If the above sequence is violated, device malfunction and possibly damage can occur as current will flow through unintended parasitic paths in the device.

Copyright © 2026 Texas Instruments Incorporated

6.9.1.4.3 Supply Pins Power Sequence

6.9.1.4.3.1 External VREG/VDD Mode Sequence

Figure 6-9 depicts the power sequencing requirements for external VREG mode. The values for all the parameters indicated can be found in Power Management Module Electrical Data and Timing.

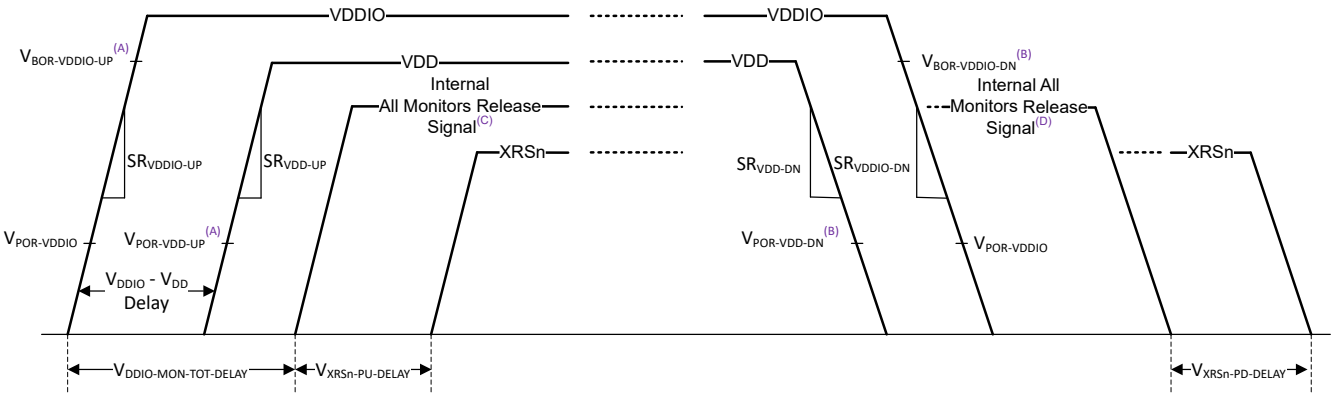

A. This trip point is the trip point before XRSn releases. See the *Power Management Module Characteristics* table.
B. This trip point is the trip point after XRSn releases. See the *Power Management Module Characteristics* table.
C. During power up, the All Monitors Release Signal goes high after all POR and BOR monitors are released. See the *PMM Block Diagram*.
D. During power down, the All Monitors Release Signal goes low if any of the POR or BOR monitors are tripped. See the *PMM Block Diagram*.

Figure 6-9. External VREG Power Up Sequence

- **For Power Up:**
  1. VDDIO (that is, the 3.3-V rail) should come up first with the minimum slew rate specified.
  2. VDD (that is, the 1.2-V rail) should come up next with the minimum slew rate specified.
  3. The time delta between the VDDIO rail coming up and when the VDD rail can come up is also specified.
  4. After the times specified by $V_{DDIO-MON-TOT-DELAY}$ and $V_{XRSN-PD-DELAY}$, XRSn will be released and the device starts the boot-up sequence.

     There is an additional delay between XRSn releasing (that is, going high) and the boot-up sequence starting. See Figure 6-6.
  5. The I/O BOR monitor has different release points during power up and power down.
  6. During power up, both VDDIO and VDD rails have to be up before XRSn releases.
- **For Power Down:**
  1. There is no requirement between VDDIO and VDD on which should power down first; however, there is a minimum slew rate specification.
  2. The I/O BOR monitor has different release points during power up and power down.
  3. Any of the POR or BOR monitors that trips during power down will cause XRSn to go low after $V_{XRSN-PD-DELAY}$.

Note

The *All Monitors Release Signal* is an internal signal.

Note

If there is an external circuit driving XRSn (for example, a supervisor), the boot-up sequence does not start until the XRSn pin is released by all internal and external sources.

Copyright © 2026 Texas Instruments Incorporated

6.9.1.4.3.2 Internal VREG/VDD Mode Sequence

Figure 6-10 depicts the power sequencing requirements for internal VREG mode. The values for all the parameters indicated can be found in Power Management Module Electrical Data and Timing.

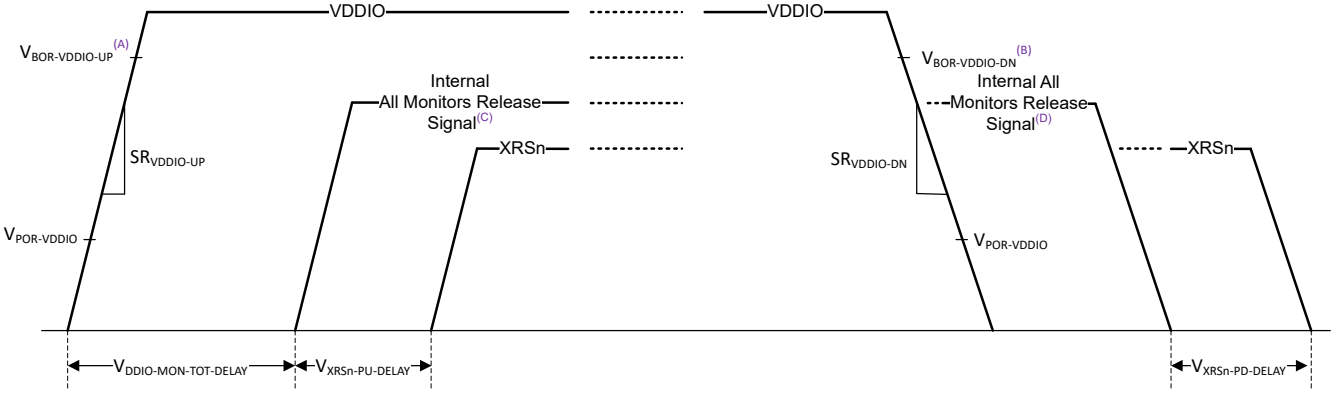

A. This trip point is the trip point before XRSn releases. See the *Power Management Module Characteristics* table.
B. This trip point is the trip point after XRSn releases. See the *Power Management Module Characteristics* table.
C. During power up, the All Monitors Release Signal goes high after all POR and BOR monitors are released. See the *PMM Block Diagram*.
D. During power down, the All Monitors Release Signal goes low if any of the POR or BOR monitors are tripped. See the *PMM Block Diagram*.

Figure 6-10. Internal VREG Power Up Sequence

- **For Power Up:**
  1. VDDIO (that is, the 3.3-V rail) should come up with the minimum slew rate specified.
  2. The Internal VREG powers up after the I/O monitors (I/O POR and I/O BOR) are released.
  3. After the times specified by $V_{DDIO-MON-TOT-DELAY}$ and $V_{XRSN-PU-DELAY}$, XRSn will be released and the device starts the boot-up sequence.

     There is an additional delay between XRSn releasing (that is, going high) and the boot-up sequence starting. See Figure 6-6.
  4. The I/O BOR monitor has different release points during power up and power down.
- **For Power Down:**
  1. The only requirement on VDDIO during power down is the slew rate.
  2. The I/O BOR monitor has different release points during power up and power down.
  3. The I/O BOR tripping will cause XRSn to go low after $V_{XRSN-PD-DELAY}$ and also power down the Internal VREG.

Note

The *All Monitors Release Signal* is an internal signal.

Note

If there is an external circuit driving XRSn (for example, a supervisor), the boot-up sequence does not start until the XRSn pin is released by all internal and external sources.

Copyright © 2026 Texas Instruments Incorporated

6.9.1.4.3.3 Supply Sequencing Summary and Effects of Violations

The acceptable power-up sequence for the rails is summarized below. "Power up" here means the rail in question has reached the minimum recommended operating voltage.

CAUTION
Non-acceptable sequences leads to reliability concerns and possibly damage.

For simplicity, connecting all 3.3-V rails together and following the descriptions in Supply Pins Power Sequence is recommended.

Table 6-4. External VREG Sequence Summary

CASE	RAILS POWER-UP ORDER			ACCEPTABLE
	VDDIO	VDDA	VDD	
A	1	2	3	Yes
B	1	3	2	Yes
C	2	1	3	No
D	2	3	1	No
E	3	2	1	No
F	3	1	2	No
G	1	1	2	Yes
H	2	2	1	No

Table 6-5. Internal VREG Sequence Summary

CASE	RAILS POWER-UP ORDER		ACCEPTABLE
	VDDIO	VDDA	
A	1	2	Yes
B	2	1	No
C	1	1	Yes

Note
The analog modules on the device should only be powered after VDDA has reached the minimum recommended operating voltage.

6.9.1.4.3.4 Supply Slew Rate

VDDIO has a minimum slew rate requirement. If the minimum slew rate is not met, XRSn might toggle a few times until VDDIO crosses the I/O BOR region.

Note
The toggling on XRSn has no adverse effect on the device as boot only starts once XRSn is steadily high. However if XRSn from the device is used to gate the reset signal of other ICs, then the slew rate requirement should be met to prevent this toggling.

VDD has a minimum slew rate requirement in external VREG mode. If the minimum slew rate is not met, the VDD POR may release before the VDD operational minimum voltage is met and the device may not start in a proper reset state.

Copyright © 2026 Texas Instruments Incorporated

6.9.1.5 Power Management Module Electrical Data and Timing

6.9.1.5.1 Power Management Module Operating Conditions

PARAMETER		TEST CONDITIONS	MIN	TYP	MAX	UNIT
General						
C_{VDDIO}	Bulk capacitance on VDDIO	Based on External Supply IC Requirements(1)		0.1		µF
C_{VDDIO_DECAP}	Decoupling capacitor on each VDDIO pin			0.1		µF
C_{VDDA}	Capacitor on VDDA pins			2.2		µF
C_{VDDIO_SW}	Capacitor on VDDIO_SW pin	For DC-DC operation(2)		20		µF
		For LDO-only operation		0.1		
C_{VDD}	Bulk capacitance on VDD	For DC-DC operation(2)		20		µF
		For LDO-only operation(3)	12	20	27	
C_{VDD_DECAP}	Decoupling capacitor on each VDD pin	For DC-DC operation(2)		0.1		µF
		For LDO-only operation(3)	0.1		6.75	
L_{VSW}	Inductor between VSW pin and VDD node for DC-DC			2.2		µH
$R_{LVSW-DCR}$	Allowed DCR for L_{VSW}			80		mΩ
$I_{SAT-LVSW}$	L_{VSW} saturation current		600			mA
$SR_{VDDIO-UP}$ (5)	Supply Ramp Up Rate of 3.3V Rail (VDDIO)		8		100	mV/µs
$SR_{VDDIO-DN}$ (5)	Supply Ramp Down Rate of 3.3V Rail (VDDIO)		20		100	mV/µs
External VREG						
C_{VDD} TOTAL(4) (6)	Total VDD Capacitance(8)		10			µF
SR_{VDD-UP} (5)	Supply Ramp Up Rate of 1.2V Rail (VDD)		3.5		100	mV/µs
SR_{VDD-DN} (5)	Supply Ramp Down Rate of 1.2V Rail (VDD)		10		100	mV/µs
V_{DDIO} - V_{DD} Delay(7)	Ramp Delay Between VDDIO and VDD		0		No Restrictions	µs

(1) Bulk capacitance on this supply should be based on supply IC requirements.
(2) See Section 6.9.1.2.6 for details.
(3) See Section 6.9.1.2.4 for details.
(4) The exact value of the decoupling capacitance depends on the system voltage regulation solution that is supplying these pins.
(5) See the *Supply Slew Rate* section. Supply ramp rate faster than the maximum can trigger the on-chip ESD protection.
(6) See the *Power Management Module (PMM)* section on possible configurations for the total decoupling capacitance.
(7) Delay between when the 3.3-V rail ramps up and when the 1.2-V rail ramps up. See the *VREG Sequence Summary* table for the allowable supply ramp sequences.
(8) Max capacitor tolerance should be 20%.

Copyright © 2026 Texas Instruments Incorporated

6.9.1.5.2 Power Management Module Characteristics

over recommended operating conditions (unless otherwise noted)

PARAMETER		TEST CONDITIONS	MIN	TYP	MAX	UNIT
V_{VREG}	Internal Voltage Regulator Output		1.14	1.2	1.32	V
$V_{VREG-PU}$	Internal Voltage Regulator Power Up Time				350	µs
$V_{VREG-INRUSH}$ (5)	Internal Voltage Regulator Inrush Current			650		mA
$V_{POR-VDDIO}$	VDDIO Power on Reset Voltage	Before and After XRSn Release		2.3		V
$V_{BOR-VDDIO-UP}$ (1)	VDDIO Brown Out Reset Voltage on Ramp Up	Before XRSn Release		2.7		V
$V_{BOR-VDDIO-DN}$ (1)	VDDIO Brown Out Reset Voltage on Ramp Down	After XRSn Release	2.81		3.0	V
$V_{POR-VDD-UP}$ (2)	VDD Power on Reset Voltage on Ramp Up	Before XRSn Release		1		V
$V_{POR-VDD-DN}$ (2)	VDD Power on Reset Voltage on Ramp Down	After XRSn Release		1		V
$V_{XRSn-PU-DELAY}$ (3)	XRSn Release Delay after Supplies are Ramped Up During Power Up	This is the final delay		40		µs
$V_{XRSn-PD-DELAY}$ (4)	XRSn Trip Delay after Supplies are Ramped Down During Power Down			2		µs
$V_{DDIO-MON-TOT-DELAY}$	Total Delays in Path of VDDIO Monitors (POR, BOR)			145		µs
$V_{XRSn-MON-RELEASE-DELAY}$	XRSn Release Delay after a VDD POR Event	Supplies Within Operating Range		40		µs
	XRSn Release Delay after a VDDIO BOR			140		µs
	XRSn Release Delay after a VDDIO POR Event			185		µs

(1) See the *Supply Voltages* figure.
(2) $V_{POR-VDD}$ is not supported and it is set to trip at a level below the recommended operating conditions. If monitoring of VDD is needed, an external supervisor is required.
(3) Supplies are considered fully ramped up after they cross the minimum recommended operating conditions for the respective rail. All POR and BOR monitors need to be released before this delay takes effect. RC network delay will add to this.
(4) On power down, any of the POR or BOR monitors that trips will immediately trip XRSn. This delay is the time between any of the POR, BOR monitors tripping and XRSn going low. It is variable and depends on the ramp down rate of the supply. RC network delay will add to this.
(5) This is the transient current drawn on the VDDIO rail when the internal VREG turns on. Due to this, there might be some voltage drops on the VDDIO rail when the VREG turns on which could cause the VREG to ramp up in steps. There is no detriment to the device from this but the effect can be reduced if desired by using sufficient decoupling capacitors on VDDIO or picking an LDO/DC-DC that can supply this transient current.

Copyright © 2026 Texas Instruments Incorporated

Supply Voltages

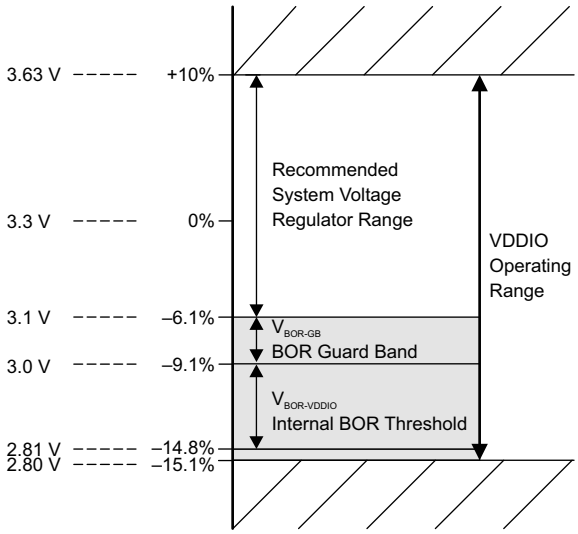

Figure 6-11. Supply Voltages

6.9.2 Reset Timing

XRSn is the device reset pin. It functions as an input and open-drain output. The device has a built-in power-on reset (POR). During power up, the POR circuit drives the XRSn pin low. A watchdog or NMI watchdog reset will also drive the pin low. An external circuit may drive the pin to assert a device reset.

A resistor with a value from 2.2 kΩ to 10 kΩ should be placed between XRSn and VDDIO. A capacitor should be placed between XRSn and VSS for noise filtering, it should be 100 nF or smaller. These values will allow the watchdog to properly drive the XRSn pin to V_{OL} within 512 OSCCLK cycles when the watchdog reset is asserted. Figure 6-12 shows the recommended reset circuit.

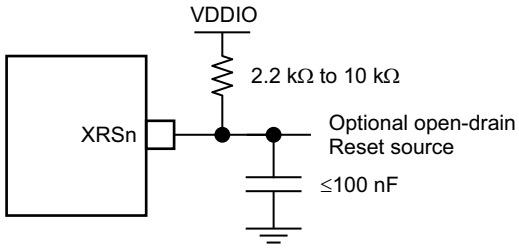

Figure 6-12. Reset Circuit

6.9.2.1 Reset Sources

Table 6-6 summarizes the various reset signals and their effect on the device.

Table 6-6. Reset Signals

RESET SOURCE	CPU CORE RESET (C28x, FPU, VCU)	PERIPHERALS RESET	JTAG/ DEBUG LOGIC RESET	I/Os	XRSn OUTPUT
POR	Yes	Yes	Yes	Hi-Z	Yes
XRSn Pin	Yes	Yes	No	Hi-Z	–
WDRS	Yes	Yes	No	Hi-Z	Yes
NMIWDRS	Yes	Yes	No	Hi-Z	Yes
SYSRS (Debugger Reset)	Yes	Yes	No	Hi-Z	No
SCCRESET	Yes	Yes	No	Hi-Z	No

The parameter $t_{h(boot\text{-}mode)}$ must account for a reset initiated from any of these sources.

See the Resets section of the System Control chapter in the *TMS320F28004x Real-Time Microcontrollers Technical Reference Manual*.

CAUTION

Some reset sources are internally driven by the device. Some of these sources will drive XRSn low, use this to disable any other devices driving the boot pins. The SCCRESET and debugger reset sources do not drive XRSn; therefore, the pins used for boot mode should not be actively driven by other devices in the system. The boot configuration has a provision for changing the boot pins in OTP; for more details, see the *TMS320F28004x Real-Time Microcontrollers Technical Reference Manual*.

Copyright © 2026 Texas Instruments Incorporated

6.9.2.2 Reset Electrical Data and Timing

Section 6.9.2.2.1 lists the reset (XRSn) timing requirements. Section 6.9.2.2.2 lists the reset (XRSn) switching characteristics. Figure 6-13 shows the power-on reset. Figure 6-14 shows the warm reset.

6.9.2.2.1 Reset (XRSn) Timing Requirements

			MIN	MAX	UNIT
$t_{h(boot-mode)}$	Hold time for boot-mode pins		1.5		ms
$t_{w(RSL2)}$	Pulse duration, XRSn low on warm reset	All cases	3.2		µs
		Low-power modes used in application and SYSCLKDIV > 16	3.2 * (SYSCLKDIV/16)		

6.9.2.2.2 Reset (XRSn) Switching Characteristics

over recommended operating conditions (unless otherwise noted)

PARAMETER		MIN	TYP	MAX	UNIT
$t_{w(RSL1)}$	Pulse duration, XRSn driven low by device after supplies are stable		100		µs
$t_{w(WDRS)}$	Pulse duration, reset pulse generated by watchdog		$512t_{c(OSCCLK)}$		cycles
$t_{boot-flash}$	Boot-ROM execution time to first instruction fetch in flash			900	µs

6.9.2.2.3 Reset Timing Diagram

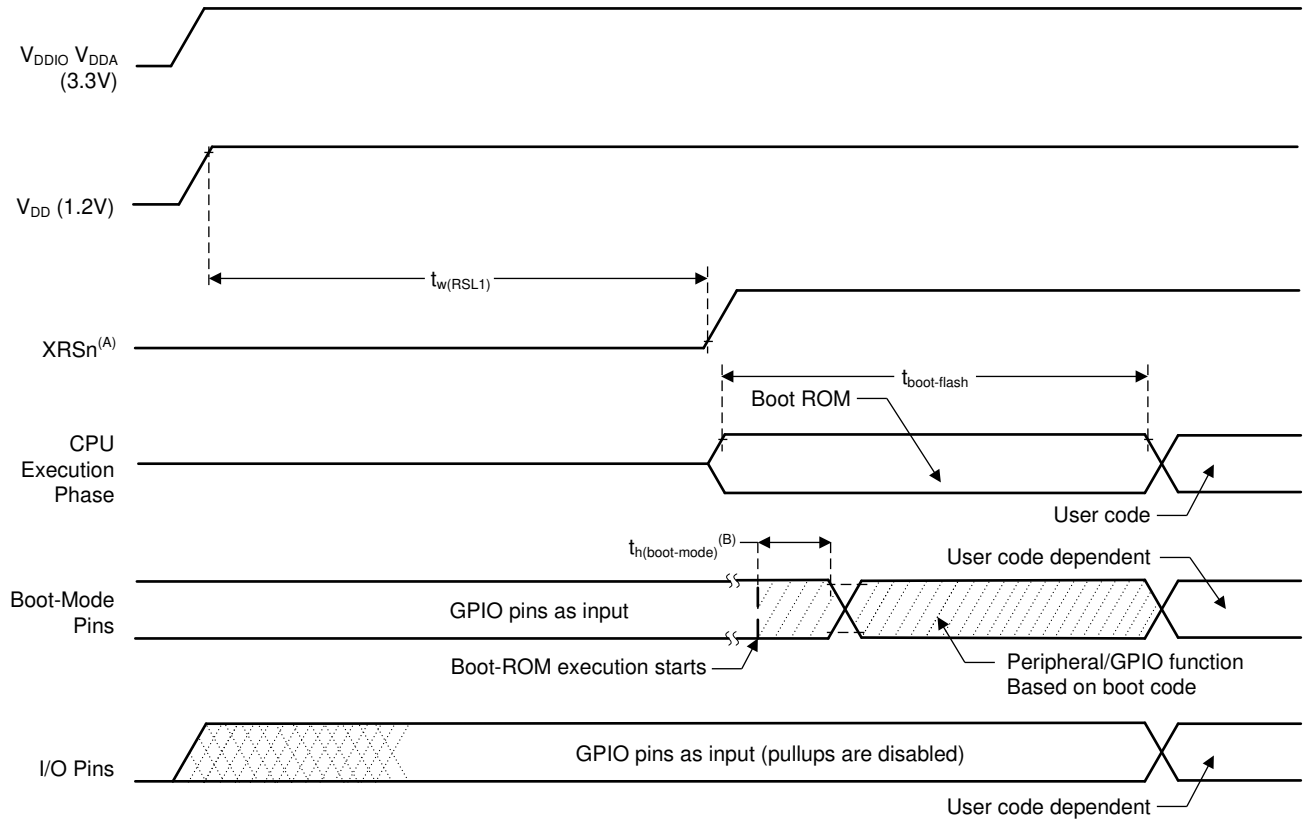

A. The XRSn pin can be driven externally by a supervisor or an external pullup resistor, see Pin Attributes. On-chip POR logic will hold this pin low until the supplies are in a valid range.

B. After reset from any source (see Reset Sources), the boot ROM code samples Boot Mode pins. Based on the status of the Boot Mode pin, the boot code branches to destination memory or boot code function. If boot ROM code executes after power-on conditions (in

Copyright © 2026 Texas Instruments Incorporated

debugger environment), the boot code execution time is based on the current SYSCLK speed. The SYSCLK will be based on user environment and could be with or without PLL enabled.

Figure 6-13. Power-on Reset

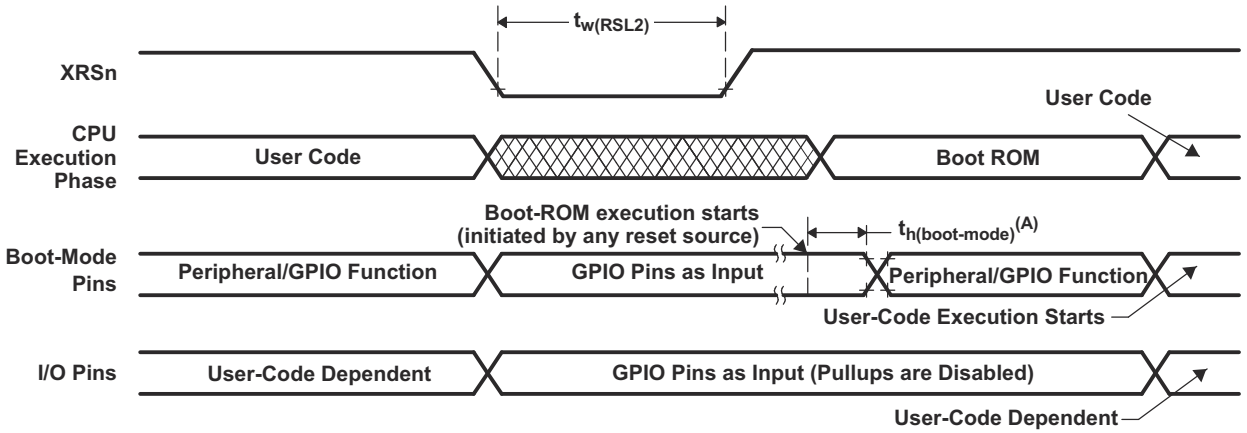

A. After reset from any source (see Reset Sources), the Boot ROM code samples BOOT Mode pins. Based on the status of the Boot Mode pin, the boot code branches to destination memory or boot code function. If Boot ROM code executes after power-on conditions (in debugger environment), the Boot code execution time is based on the current SYSCLK speed. The SYSCLK will be based on user environment and could be with or without PLL enabled.

Figure 6-14. Warm Reset

6.9.3 Clock Specifications

6.9.3.1 Clock Sources

Table 6-7 lists three possible clock sources. Figure 6-15 shows the clocking system. Figure 6-16 shows the system PLL.

Table 6-7. Possible Reference Clock Sources

CLOCK SOURCE	MODULES CLOCKED	COMMENTS
INTOSC1	Can be used to provide clock for: • Watchdog block • Main PLL • CPU-Timer 2	Internal oscillator 1. Zero-pin overhead 10-MHz internal oscillator.
INTOSC2(1)	Can be used to provide clock for: • Main PLL • CPU-Timer 2	Internal oscillator 2. Zero-pin overhead 10-MHz internal oscillator.
X1 (XTAL)	Can be used to provide clock for: • Main PLL • CPU-Timer 2	External crystal or resonator connected between the X1 and X2 pins or single-ended clock connected to the X1 pin.

(1) On reset, internal oscillator 2 (INTOSC2) is the default clock source for the system PLL (OSCCLK).

Copyright © 2026 Texas Instruments Incorporated

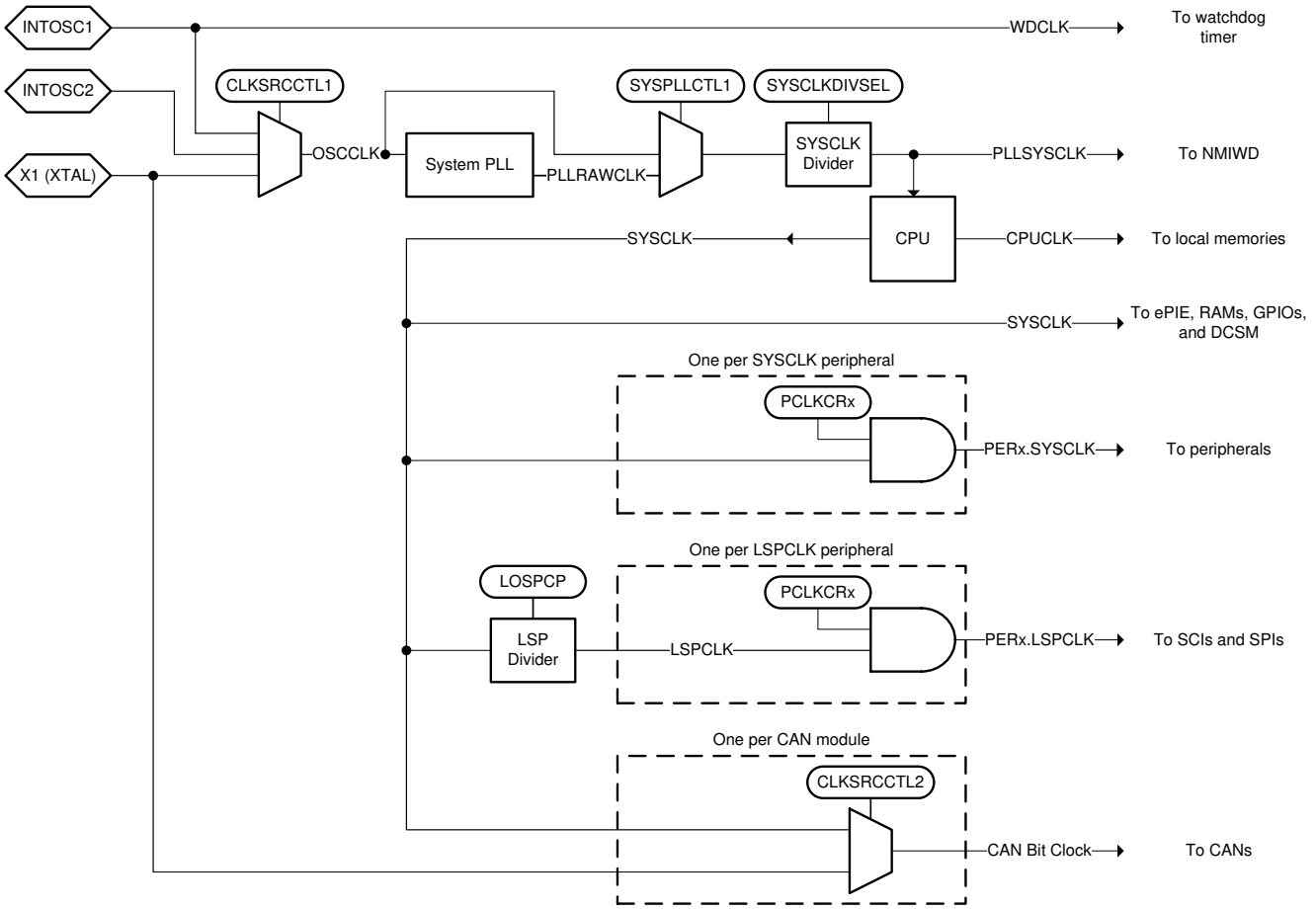

Figure 6-15. Clocking System

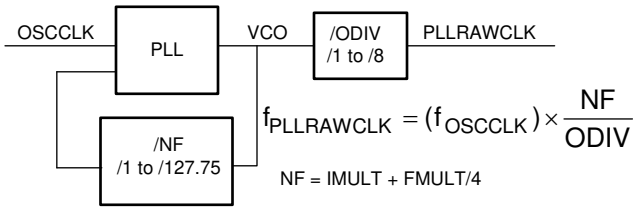

Figure 6-16. System PLL

6.9.3.2 Clock Frequencies, Requirements, and Characteristics

This section provides the frequencies and timing requirements of the input clocks, PLL lock times, frequencies of the internal clocks, and the frequency and switching characteristics of the output clock.

6.9.3.2.1 Input Clock Frequency and Timing Requirements, PLL Lock Times

Section 6.9.3.2.1.1 lists the frequency requirements for the input clocks. Section 6.9.3.2.1.2 lists the XTAL oscillator characteristics. Section 6.9.3.2.1.3 lists the X1 timing requirements. Section 6.9.3.2.1.4 lists the PLL lock times for the Main PLL .

6.9.3.2.1.1 Input Clock Frequency

		MIN	MAX	UNIT
$f_{(XTAL)}$	Frequency, X1/X2, from external crystal or resonator	10	20	MHz
$f_{(X1)}$	Frequency, X1, from external oscillator	2	20	MHz

6.9.3.2.1.2 XTAL Oscillator Characteristics

over recommended operating conditions (unless otherwise noted)

PARAMETER		MIN	TYP	MAX	UNIT
X1 V_{IL}	Valid low-level input voltage	–0.3		0.3 * VDDIO	V
X1 V_{IH}	Valid high-level input voltage	0.7 * VDDIO		VDDIO + 0.3	V

6.9.3.2.1.3 X1 Timing Requirements

		MIN	MAX	UNIT
$t_{f(X1)}$	Fall time, X1		6	ns
$t_{r(X1)}$	Rise time, X1		6	ns
$t_{w(X1L)}$	Pulse duration, X1 low as a percentage of $t_{c(X1)}$	45%	55%	
$t_{w(X1H)}$	Pulse duration, X1 high as a percentage of $t_{c(X1)}$	45%	55%	

6.9.3.2.1.4 PLL Lock Times

		MIN	NOM	MAX	UNIT
$t_{(PLL)}$	Lock time, Main PLL		25.5 µs + 1024 * $t_{c(OSCCLK)}$		µs

Copyright © 2026 Texas Instruments Incorporated

6.9.3.2.2 Internal Clock Frequencies

Section 6.9.3.2.2.1 provides the clock frequencies for the internal clocks.

6.9.3.2.2.1 Internal Clock Frequencies

		MIN	NOM	MAX	UNIT
$f_{(SYSCLK)}$	Frequency, device (system) clock	2		100	MHz
$t_{c(SYSCLK)}$	Period, device (system) clock	10		500	ns
$f_{(VCO)}$	Frequency, PLL VCO (before output divider)	120		400	MHz
$f_{(PLLRAWCLK)}$	Frequency, system PLL output (before SYSCLK divider)	15		200	MHz
$f_{(PLL)}$	Frequency, PLLSYSCLK	2		100	MHz
$f_{(LSP)}$	Frequency, LSPCLK	2		100	MHz
$t_{c(LSPCLK)}$	Period, LSPCLK	10		500	ns
$f_{(OSCCLK)}$	Frequency, OSCCLK (INTOSC1 or INTOSC2 or XTAL or X1)		See respective clock		MHz
$f_{(HRPWM)}$	Frequency, HRPWMCLK	60		100	MHz

6.9.3.2.3 Output Clock Frequency and Switching Characteristics

Section 6.9.3.2.3.1 lists the switching characteristics of the output clock, XCLKOUT.

6.9.3.2.3.1 XCLKOUT Switching Characteristics

over recommended operating conditions (unless otherwise noted)

PARAMETER[1]		MIN	MAX	UNIT
$t_{f(XCO)}$	Fall time, XCLKOUT		5	ns
$t_{r(XCO)}$	Rise time, XCLKOUT		5	ns
$t_{w(XCOL)}$	Pulse duration, XCLKOUT low	H – 2[2]	H + 2[2]	ns
$t_{w(XCOH)}$	Pulse duration, XCLKOUT high	H – 2[2]	H + 2[2]	ns
$f_{(XCO)}$	Frequency, XCLKOUT		50	MHz

(1) A load of 40 pF is assumed for these parameters.
(2) $H = 0.5t_{c(XCO)}$

6.9.3.3 Input Clocks and PLLs

Note

GPIO18* and its mux options can be used only when the system is clocked by INTOSC and X1 has an external pulldown resistor.

In addition to the internal 0-pin oscillators, three types of external clock sources are supported:

- A single-ended 3.3-V external clock. The clock signal should be connected to X1, as shown in Figure 6-17, with the XTALCR.SE bit set to 1.

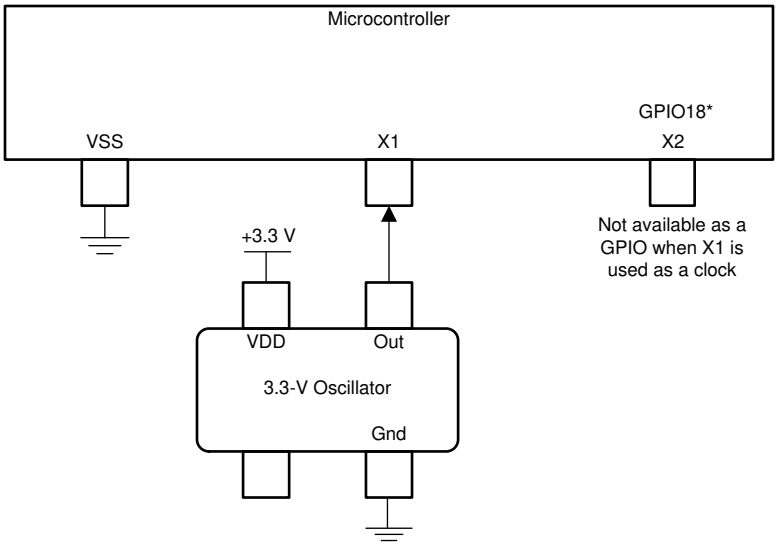

Figure 6-17. Single-ended 3.3-V External Clock

- An external crystal. The crystal should be connected across X1 and X2 with its load capacitors connected to VSS as shown in Figure 6-18.

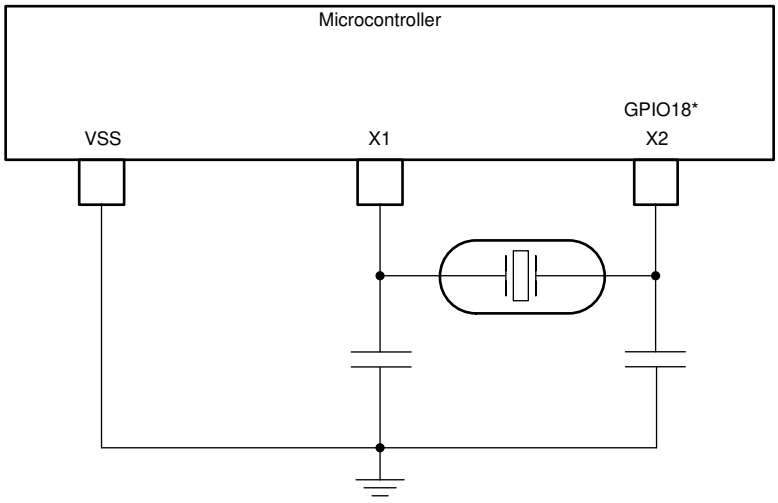

Figure 6-18. External Crystal

- An external resonator. The resonator should be connected across X1 and X2 with its ground connected to VSS as shown in Figure 6-19.

Copyright © 2026 Texas Instruments Incorporated

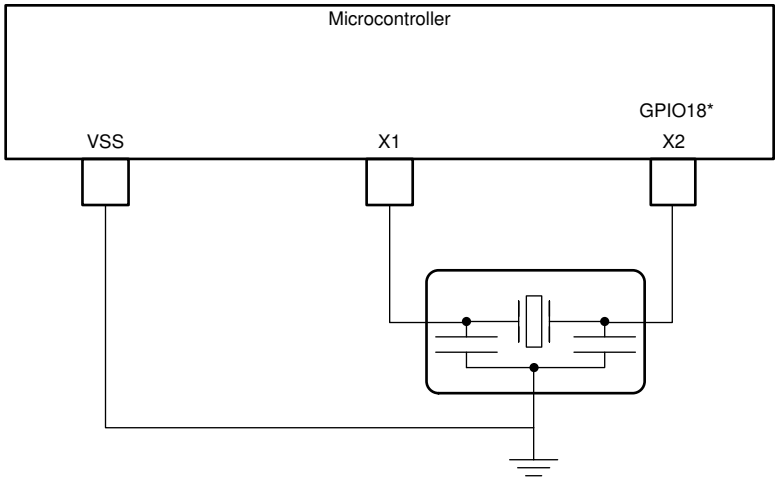

Figure 6-19. External Resonator

6.9.3.4 XTAL Oscillator

6.9.3.4.1 Introduction

The crystal oscillator in this device is an embedded electrical oscillator that, when paired with a compatible quartz crystal (or a ceramic resonator), can generate the system clock required by the device.

6.9.3.4.2 Overview

The following sections describe the components of the electrical oscillator and crystal.

6.9.3.4.2.1 Electrical Oscillator

The electrical oscillator in this device is a Pierce oscillator. It is a positive feedback inverter circuit that requires a tuning circuit in order to oscillate. When this oscillator is paired with a compatible crystal, a tank circuit is formed. This tank circuit oscillates at the fundamental frequency of the crystal. On this device, the oscillator is designed to operate in parallel resonance mode due to the shunt capacitor (C0) and required load capacitors (CL). Figure 6-20 illustrates the components of the electrical oscillator and the tank circuit.

Copyright © 2026 Texas Instruments Incorporated

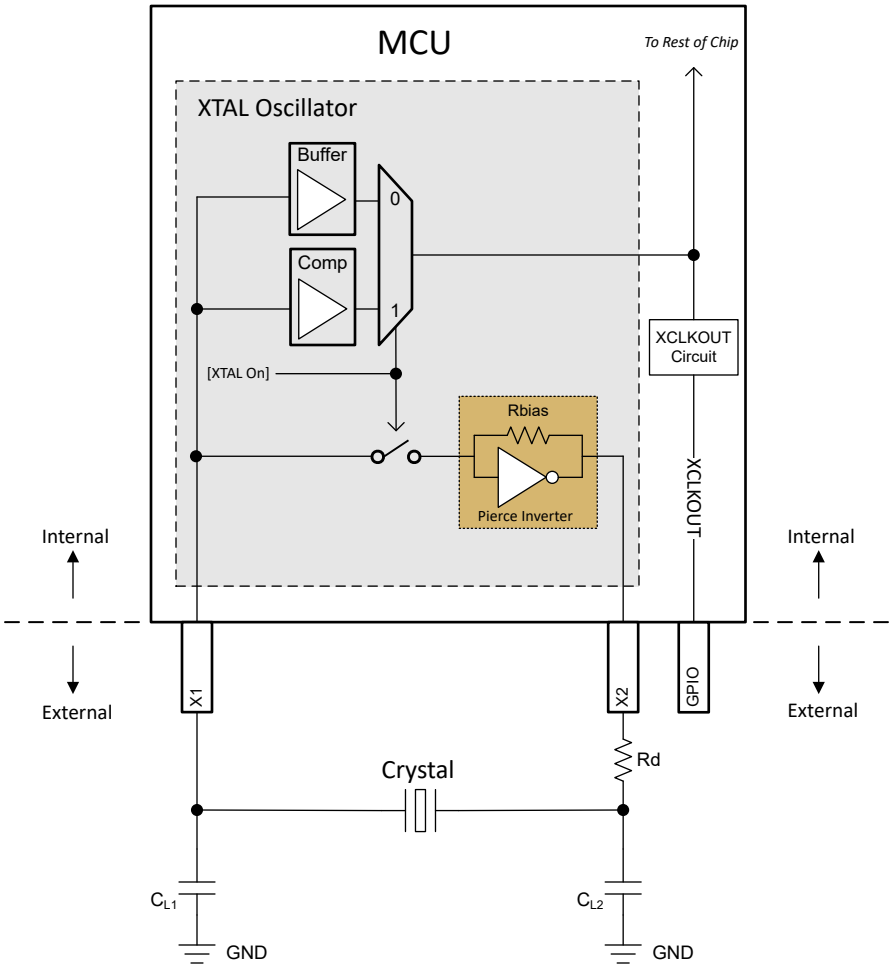

Figure 6-20. Electrical Oscillator Block Diagram

6.9.3.4.2.1.1 Modes of Operation

The electrical oscillator in this device has two modes of operation: crystal mode and single-ended mode.

6.9.3.4.2.1.1.1 Crystal Mode of Operation

In the crystal mode of operation, a quartz crystal with load capacitors has to be connected to X1 and X2.

This mode of operation is engaged when [XTAL On] = 1, which is achieved by setting XTALCR.OSCOFF = 0 and XTALCR.SE = 0. There is an internal bias resistor for the feedback loop so an external one should not be used. Adding an external bias resistor will create a parallel resistance with the internal Rbias, moving the bias point of operation and possibly leading to clipped waveforms, out-of-specification duty cycle, and reduction in the effective negative resistance.

In this mode of operation, the resultant clock on X1 is passed through a comparator (Comp) to the rest of the chip. The clock on X1 needs to meet the VIH and VIL of the comparator. See the *XTAL Oscillator Characteristics* table for the VIH and VIL requirements of the comparator.

6.9.3.4.2.1.1.2 Single-Ended Mode of Operation

In the single-ended mode of operation, a clock signal is connected to X1 with X2 left unconnected. A quartz crystal should not be used in this mode.

This mode is enabled when [XTAL On] = 0, which can be achieved by setting XTALCR.OSCOFF = 1 and XTALCR.SE = 1.

Copyright © 2026 Texas Instruments Incorporated

In this mode of operation, the clock on X1 is passed through a buffer (Buffer) to the rest of the chip. See the *X1 Input Level Characteristics When Using an External Clock Source (Not a Crystal)* table for the input requirements of the buffer.

6.9.3.4.2.1.2 XTAL Output on XCLKOUT

The output of the electrical oscillator that is fed to the rest of the chip can be brought out on XCLKOUT for observation by configuring the CLKSRCCTL3.XCLKOUTSEL and XCLKOUTDIVSEL.XCLKOUTDIV registers. See the *GPIO Muxed Pins* table for a list of GPIOs that XCLKOUT comes out on.

6.9.3.4.2.2 Quartz Crystal

Electrically, a quartz crystal can be represented by an LCR (Inductor-Capacitor-Resistor) circuit. However, unlike an LCR circuit, crystals have very high Q due to the low motional resistance and are also very underdamped. Components of the crystal are shown in Figure 6-21 and explained below.

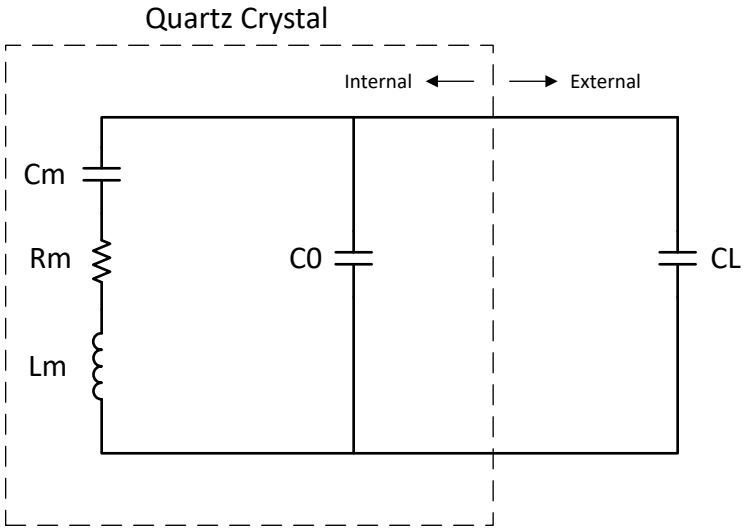

Figure 6-21. Crystal Electrical Representation

Cm (Motional capacitance): Denotes the elasticity of the crystal.

Rm (Motional resistance): Denotes the resistive losses within the crystal. This is not the ESR of the crystal but can be approximated as such depending on the values of the other crystal components.

Lm (Motional inductance): Denotes the vibrating mass of the crystal.

C0 (Shunt capacitance): The capacitance formed from the two crystal electrodes and stray package capacitance.

CL (Load capacitance): This is the effective capacitance seen by the crystal at its electrodes. It is external to the crystal. The frequency ppm specified in the crystal data sheet is usually tied to the CL parameter.

Note that most crystal manufacturers specify CL as the effective capacitance seen at the crystal pins, while some crystal manufacturers specify CL as the capacitance on just one of the crystal pins. Check with the crystal manufacturer for how the CL is specified in order to use the correct values in calculations.

From Figure 6-20, CL1 and CL2 are in series; so, to find the equivalent total capacitance seen by the crystal, the capacitance series formula has to be applied which simply evaluates to [CL1]/2 if CL1 = CL2.

It is recommended that a stray PCB capacitance be added to this value. 3 pF to 5 pF are reasonable estimates, but the actual value will depend on the PCB in question.

Note that the load capacitance is a requirement of both the electrical oscillator and crystal. The value chosen has to satisfy both the electrical oscillator and the crystal.

Copyright © 2026 Texas Instruments Incorporated

The effect of CL on the crystal is frequency-pulling. If the effective load capacitance is lower than the target, the crystal frequency will increase and vice versa. However, the effect of frequency-pulling is usually very minimal and typically results in less than 10-ppm variation from the nominal frequency.

6.9.3.4.2.3 GPIO Modes of Operation

On this device, X2 can be used as GPIO18 depending on the operating mode of the XTAL. Refer to the *External Oscillator (XTAL)* section of the *TMS320F28004x Real-Time Microcontrollers Technical Reference Manual* .

6.9.3.4.3 Functional Operation

6.9.3.4.3.1 ESR – Effective Series Resistance

Effective Series Resistance is the resistive load the crystal presents to the electrical oscillator at resonance. The higher the ESR, the lower the Q, and less likely the crystal will start up or maintain oscillation. The relationship between ESR and the crystal components is indicated below.

$$ESR = Rm * \left(1 + \frac{C0}{CL}\right)^2 \quad (1)$$

Note that ESR is not the same as motional resistance of the crystal, but can be approximated as such if the effective load capacitance is much greater than the shunt capacitance.

6.9.3.4.3.2 Rneg – Negative Resistance

Negative resistance is the impedance presented by the electrical oscillator to the crystal. It is the amount of energy the electrical oscillator must supply to the crystal to overcome the losses incurred during oscillation. Rneg depicts a circuit that provides rather than consume energy and can also be viewed as the overall gain of the circuit.

The generally accepted practice is to have Rneg > 3x ESR to 5x ESR to ensure the crystal starts up under all conditions. Note that it takes slightly more energy to start up the crystal than it does to sustain oscillation; therefore, if it can be ensured that the negative resistance requirement is met at start-up, then oscillation sustenance will not be an issue.

Figure 6-22 and Figure 6-23 show the variation between negative resistance and the crystal components for this device. As can be seen from the graphs, the crystal shunt capacitance (C0) and effective load capacitance (CL) greatly influence the negative resistance of the electrical oscillator. Note that these are typical graphs; so, refer to Table 6-8 for minimum and maximum values for design considerations.

6.9.3.4.3.3 Start-up Time

Start-up time is an important consideration when selecting the components of the crystal circuit. As mentioned in the *Rneg – Negative Resistance* section, for reliable start-up across all conditions, it is recommended that the Rneg > 3x ESR to 5x ESR of the crystal.

Crystal ESR and the dampening resistor (Rd) greatly affect the start-up time. The higher the two values, the longer the crystal takes to start up. Longer start-up times are usually a sign that the crystal and components are not a correct match.

Refer to the *Crystal Oscillator Specifications* section for the typical start-up times. Note that the numbers specified here are typical numbers provided for guidance only. Actual start-up time depends heavily on the crystal in question and the external components.

6.9.3.4.3.4 DL – Drive Level

Drive level refers to how much power is provided by the electrical oscillator and dissipated by the crystal. The maximum drive level specified in the crystal manufacturer's data sheet is usually the maximum the crystal can dissipate without damage or significant reduction in operating life. On the other hand, the drive level specified by the electrical oscillator is the maximum power it can provide. The actual power provided by the electrical oscillator is not necessarily the maximum power and depends on the crystal and board components.

Copyright © 2026 Texas Instruments Incorporated

For cases where the actual drive level from the electrical oscillator exceeds the maximum drive level specification of the crystal, a dampening resistor (Rd) should be installed to limit the current and reduce the power dissipated by the crystal. Note that Rd reduces the circuit gain; and therefore, the actual value to use should be evaluated to make sure all other conditions for start-up and sustained oscillation are met.

6.9.3.4.4 How to Choose a Crystal

Using Crystal Oscillator Specifications as a reference:

1. Pick a crystal frequency (for example, 20 MHz).
2. Check that the ESR of the crystal <=50 Ω per specifications for 20 MHz.
3. Check that the load capacitance requirement of the crystal manufacturer is within 6 pF and 12 pF per specifications for 20 MHz.
   - As mentioned, CL1 and CL2 are in series; so, provided CL1 = CL2, effective load capacitance CL = [CL1]/2.
   - Adding board parasitics to this results in CL = [CL1]/2 + Cstray
4. Check that the maximum drive level of the crystal >= 1 mW. If this requirement is not met, a dampening resistor Rd can be used. Refer to DL – Drive Level on other points to consider when using Rd.

6.9.3.4.5 Testing

It is recommended that the user have the crystal manufacturer completely characterize the crystal with their board to ensure the crystal always starts up and maintains oscillation.

Below is a brief overview of some measurements that can be performed:

Due to how sensitive the crystal circuit is to capacitance, it is recommended that scope probes not be connected to X1 and X2. If scope probes must be used to monitor X1/X2, an active probe with less than 1-pF input capacitance should be used.

Frequency

1. Bring out the XTAL on XCLKOUT.
2. Measure this frequency as the crystal frequency.

Negative Resistance

1. Bring out the XTAL on XCLKOUT.
2. Place a potentiometer in series with the crystal between the load capacitors.
3. Increase the resistance of the potentiometer until the clock on XCLKOUT stops.
4. This resistance plus the crystal's actual ESR is the negative resistance of the electrical oscillator.

Start-Up Time

1. Turn off the XTAL.
2. Bring out the XTAL on XCLKOUT.
3. Turn on the XTAL and measure how long it takes the clock on XCLKOUT to stay within 45% and 55% duty cycle.

6.9.3.4.6 Common Problems and Debug Tips

Crystal Fails to Start Up

- Go through the *How to Choose a Crystal* section and make sure there are no violations.

Crystal Takes a Long Time to Start Up

- If a dampening resistor Rd is installed, it is too high.
- If no dampening resistor is installed, either the crystal ESR is too high or the overall circuit gain is too low due to high load capacitance.

Copyright © 2026 Texas Instruments Incorporated

6.9.3.4.7 Crystal Oscillator Specifications

6.9.3.4.7.1 Crystal Oscillator Parameters

		MIN	MAX	UNIT
CL1, CL2	Load capacitance	12	24	pF
C0	Crystal shunt capacitance		7	pF

6.9.3.4.7.2 Crystal Equivalent Series Resistance (ESR) Requirements

For the Crystal Equivalent Series Resistance (ESR) Requirements table:

1. Crystal shunt capacitance (C0) should be less than or equal to 7 pF.
2. ESR = Negative Resistance/3

Table 6-8. Crystal Equivalent Series Resistance (ESR) Requirements

CRYSTAL FREQUENCY (MHz)	MAXIMUM ESR (Ω) (CL1 = CL2 = 12 pF)	MAXIMUM ESR (Ω) (CL1 = CL2 = 24 pF)
10	55	110
12	50	95
14	50	90
16	45	75
18	45	65
20	45	50

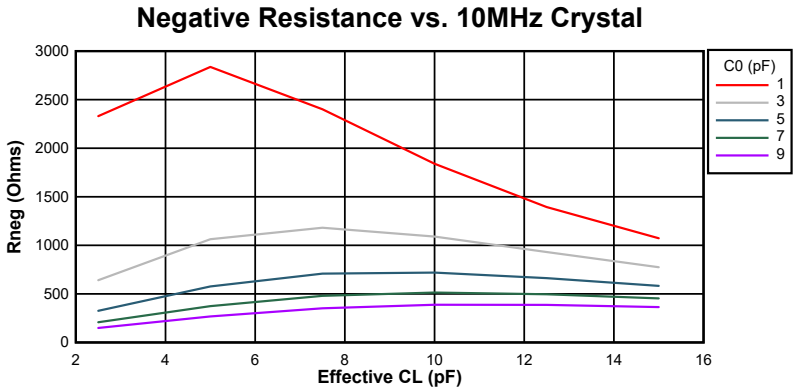

Figure 6-22. Negative Resistance Variation at 10 MHz

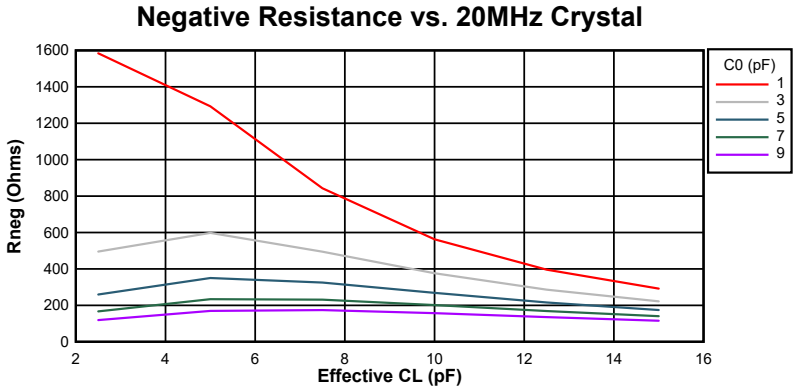

Figure 6-23. Negative Resistance Variation at 20 MHz

Copyright © 2026 Texas Instruments Incorporated

6.9.3.4.7.3 Crystal Oscillator Electrical Characteristics

over recommended operating conditions (unless otherwise noted)

PARAMETER		TEST CONDITIONS	MIN	TYP	MAX	UNIT
Start-up time[1]	f = 10 MHz	ESR MAX = 110 Ω CL1 = CL2 = 24 pF C0 = 7 pF		4		ms
	f = 20 MHz	ESR MAX = 50 Ω CL1 = CL2 = 24 pF C0 = 7 pF		2		ms
Crystal drive level (DL)					1	mW

(1) Start-up time is dependent on the crystal and tank circuit components. TI recommends that the crystal vendor characterize the application with the chosen crystal.

6.9.3.5 Internal Oscillators

To reduce production board costs and application development time, all F28004x devices contain two independent internal oscillators, referred to as INTOSC1 and INTOSC2. By default, both oscillators are enabled at power up. INTOSC2 is set as the source for the system reference clock (OSCCLK) and INTOSC1 is set as the backup clock source. INTOSC1 can also be manually configured as the system reference clock (OSCCLK). Section 6.9.3.5.1 provides the electrical characteristics of the internal oscillators to determine if this module meets the clocking requirements of the application.

6.9.3.5.1 INTOSC Characteristics

over recommended operating conditions (unless otherwise noted)

PARAMETER		TEST CONDITIONS	MIN	TYP	MAX	UNIT
f_{INTOSC}	Frequency, INTOSC1 and INTOSC2		9.7	10	10.3	MHz
$f_{INTOSC-STABILITY}$	Frequency stability at room temperature	30°C, Nominal VDD		±0.1%		
	Frequency stability over VDD	30°C		±0.2%		
	Frequency stability		–3%		3%	
$t_{INT0SC-ST}$	Start-up and settling time				20	µs

6.9.4 Flash Parameters

Table 6-9 lists the minimum required Flash wait states with different clock sources and frequencies.

Table 6-9. Minimum Required Flash Wait States (FRDCNTL[RWAIT]) at Different CPUCLK Frequencies

CPUCLK (MHz)	Flash Read, Execute, Program or Erase	Flash Bank/Pump in LPM OR Entering/Exiting LPM Active → Sleep → Active OR Active → Stdby → Active
80 < CPUCLK ≤ 100	4	5
60 < CPUCLK ≤ 80	3	4
40 < CPUCLK ≤ 60	2	3
20 < CPUCLK ≤ 40	1	2
10 < CPUCLK ≤ 20	0	1
CPUCLK ≤ 10	0	0

The F28004x devices have an improved 128-bit prefetch buffer that provides high flash code execution efficiency across wait states. Figure 6-24 and Figure 6-25 illustrate typical efficiency across wait-state settings compared to previous-generation devices with a 64-bit prefetch buffer. Wait-state execution efficiency with a prefetch buffer will depend on how many branches are present in application software. Two examples of linear code and if-then-else code are provided.

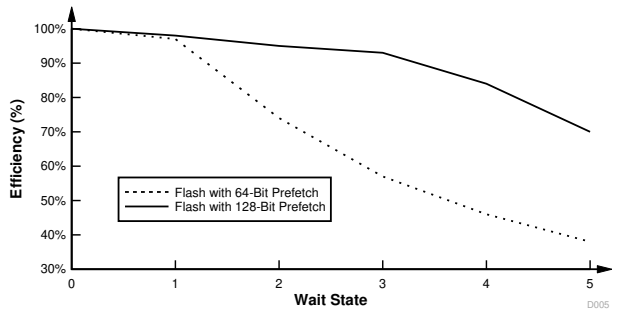

Figure 6-24. Application Code With Heavy 32-Bit Floating-Point Math Instructions

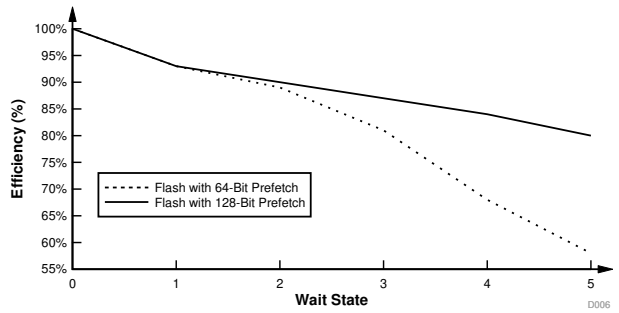

Figure 6-25. Application Code With 16-Bit If-Else Instructions

Copyright © 2026 Texas Instruments Incorporated

Table 6-10 lists the Flash parameters.

Table 6-10. Flash Parameters

PARAMETER		MIN	TYP	MAX	UNIT
Program Time (1)	128 data bits + 16 ECC bits		150	300	µs
	8KB sector		50	100	ms
Erase Time (2) at < 25 W/E cycles	8KB sector		15	100	ms
Erase Time (2) at 1000 W/E cycles	8KB sector		25	350	ms
Erase Time (2) at 2000 W/E cycles	8KB sector		30	600	ms
Erase Time (2) at 20K W/E cycles	8KB sector		120	4000	ms
N_{wec} Write/Erase Cycles per sector				20000	cycles
N_{wec} Write/Erase Cycles for entire Flash (combined all sectors)(3)				100000	cycles
$t_{retention}$ Data retention duration at T_J = 85°C		20			years

(1) Program time is at the maximum device frequency. Program time includes overhead of the flash state machine but does not include the time to transfer the following into RAM:
- Code that uses flash API to program the flash
- Flash API itself
- Flash data to be programmed

In other words, the time indicated in this table is applicable after all the required code/data is available in the device RAM, ready for programming. The transfer time will significantly vary depending on the speed of the JTAG debug probe used.
Program time calculation is based on programming 144 bits at a time at the specified operating frequency. Program time includes Program verify by the CPU. The program time does not degrade with write/erase (W/E) cycling, but the erase time does and hence Erase time is provided for 25 W/E cycles, 1K W/E cycles, 2K W/E cycles and 20K W/E cycles.
Erase time includes Erase verify by the CPU and does not involve any data transfer.

(2) Erase time includes Erase verify by the CPU.

(3) Each sector, by itself, can only be erased/programmed 20,000 times. If you choose to use a sector (or multiple sectors) like an EEPROM, you can erase/program only those sectors (still limited to 20,000 cycles) without erasing/programming the entire Flash memory. Therefore, the total number of W/E cycles from a *device* perspective can exceed 20,000 cycles. However, even this number should not exceed 100,000 cycles.

Note

The Main Array flash programming must be aligned to 64-bit address boundaries and each 64-bit word may only be programmed once per write/erase cycle.

The DCSM OTP programming must be aligned to 128-bit address boundaries and each 128-bit word may only be programmed once. The exceptions are:

1. The DCSM Zx-LINKPOINTER1 and Zx-LINKPOINTER2 values in the DCSM OTP should be programmed together, and may be programmed 1 bit at a time as required by the DCSM operation.
2. The DCSM Zx-LINKPOINTER3 values in the DCSM OTP may be programmed 1 bit at a time on a 64-bit boundary to separate it from Zx-PSWDLOCK, which must only be programmed once.

Copyright © 2026 Texas Instruments Incorporated

6.9.5 Emulation/JTAG

The JTAG (IEEE Standard 1149.1-1990 Standard Test Access Port and Boundary Scan Architecture) port has four dedicated pins: TMS, TDI, TDO, and TCK. The cJTAG (IEEE Standard 1149.7-2009 for Reduced-Pin and Enhanced-Functionality Test Access Port and Boundary-Scan Architecture) port is a compact JTAG interface requiring only two pins (TMS and TCK), which allows other device functionality to be muxed to the traditional GPIO35 (TDI) and GPIO37 (TDO) pins.

Typically, no buffers are needed on the JTAG signals when the distance between the MCU target and the JTAG header is smaller than 6 inches (15.24 cm), and no other devices are present on the JTAG chain. Otherwise, each signal should be buffered. Additionally, for most JTAG debug probe operations at 10 MHz, no series resistors are needed on the JTAG signals. However, if high emulation speeds are expected (35 MHz or so), 22-Ω resistors should be placed in series on each JTAG signal.

The PD (Power Detect) terminal of the JTAG debug probe header should be connected to the board's 3.3-V supply. Header GND terminals should be connected to board ground. TDIS (Cable Disconnect Sense) should also be connected to board ground. The JTAG clock should be looped from the header TCK output terminal back to the RTCK input terminal of the header (to sense clock continuity by the JTAG debug probe). This MCU does not support the EMU0 and EMU1 signals that are present on 14-pin and 20-pin emulation headers. These signals should always be pulled up at the emulation header through a pair of board pullup resistors ranging from 2.2 kΩ to 4.7 kΩ (depending on the drive strength of the debugger ports). Typically, a 2.2-kΩ value is used.

Header terminal $\overline{\text{RESET}}$ is an open-drain output from the JTAG debug probe header that enables board components to be reset through JTAG debug probe commands (available only through the 20-pin header). Figure 6-26 shows how the 14-pin JTAG header connects to the MCU's JTAG port signals. Figure 6-27 shows how to connect to the 20-pin JTAG header. The 20-pin JTAG header terminals EMU2, EMU3, and EMU4 are not used and should be grounded.

For more information about hardware breakpoints and watchpoints, see Hardware Breakpoints and Watchpoints for C28x in CCS.

For more information about JTAG emulation, see the *XDS Target Connection Guide*.

Note

JTAG Test Data Input (TDI) is the default mux selection for the pin. The internal pullup is disabled by default. If this pin is used as JTAG TDI, the internal pullup should be enabled or an external pullup added on the board to avoid a floating input. In the cJTAG option, this pin can be used as GPIO.

JTAG Test Data Output (TDO) is the default mux selection for the pin. The internal pullup is disabled by default. The TDO function will be in a tri-state condition when there is no JTAG activity, leaving this pin floating. The internal pullup should be enabled or an external pullup added on the board to avoid a floating GPIO input. In the cJTAG option, this pin can be used as GPIO.

Copyright © 2026 Texas Instruments Incorporated

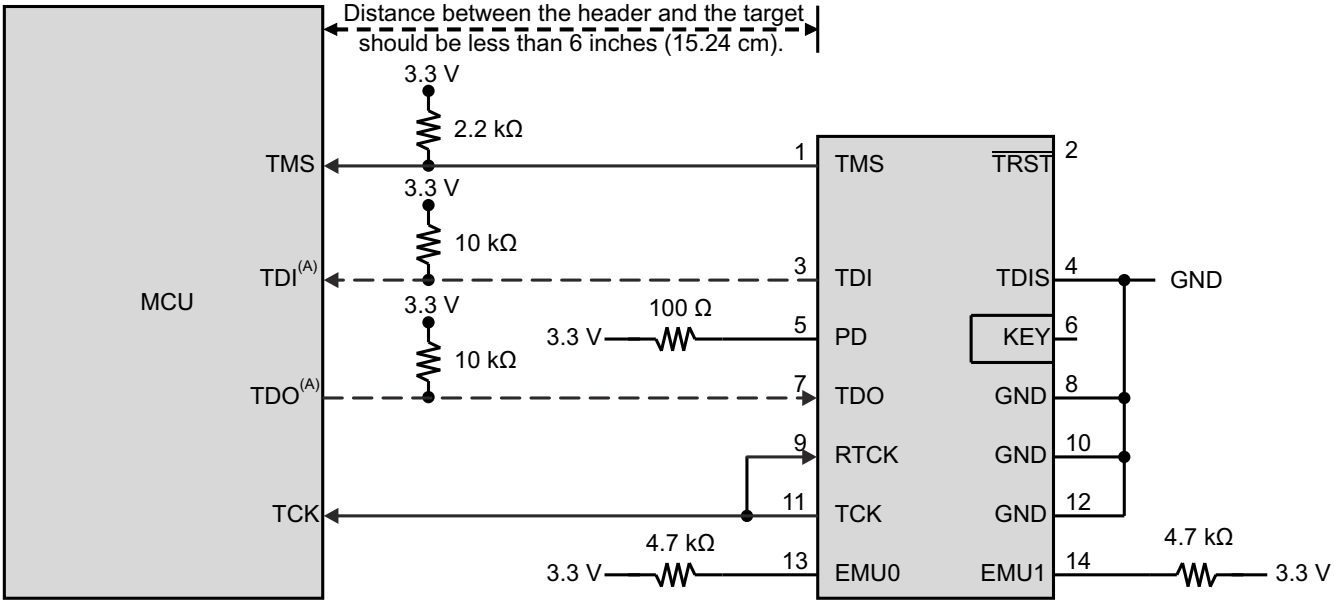

A. TDI and TDO connections are not required for cJTAG option and these pins can be used as GPIOs instead.

Figure 6-26. Connecting to the 14-Pin JTAG Header

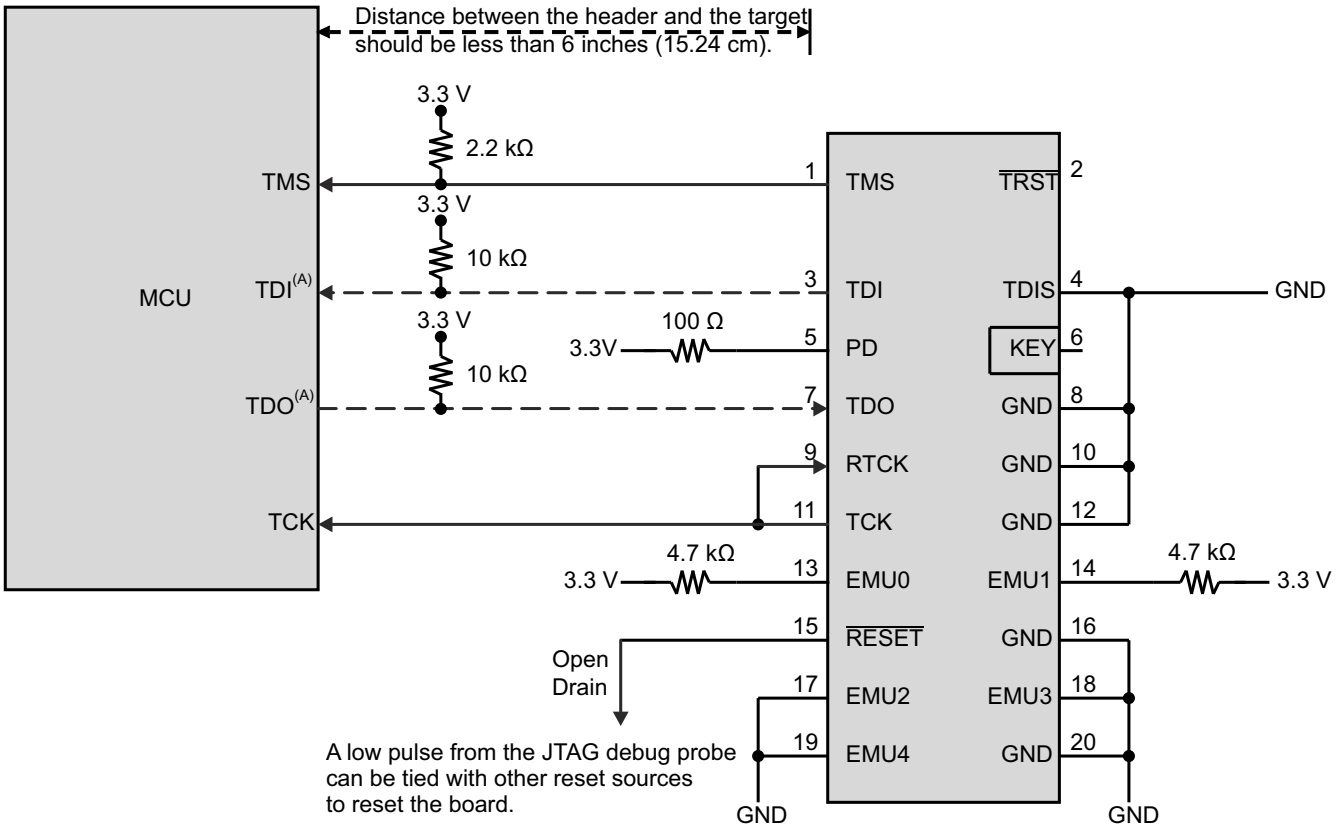

A. TDI and TDO connections are not required for cJTAG option and these pins can be used as GPIOs instead.

Figure 6-27. Connecting to the 20-Pin JTAG Header

6.9.5.1 JTAG Electrical Data and Timing

Section 6.9.5.1.1 lists the JTAG timing requirements. Section 6.9.5.1.2 lists the JTAG switching characteristics. Figure 6-28 shows the JTAG timing.

6.9.5.1.1 JTAG Timing Requirements

NO.			MIN	MAX	UNIT
1	$t_{c(TCK)}$	Cycle time, TCK	66.66		ns
1a	$t_{w(TCKH)}$	Pulse duration, TCK high (40% of t_c)	26.66		ns
1b	$t_{w(TCKL)}$	Pulse duration, TCK low (40% of t_c)	26.66		ns
3	$t_{su(TDI-TCKH)}$	Input setup time, TDI valid to TCK high	13		ns
	$t_{su(TMS-TCKH)}$	Input setup time, TMS valid to TCK high	13		
4	$t_{h(TCKH-TDI)}$	Input hold time, TDI valid from TCK high	7		ns
	$t_{h(TCKH-TMS)}$	Input hold time, TMS valid from TCK high	7		

6.9.5.1.2 JTAG Switching Characteristics

over recommended operating conditions (unless otherwise noted)

NO.	PARAMETER		MIN	MAX	UNIT
2	$t_{d(TCKL-TDO)}$	Delay time, TCK low to TDO valid	6	25	ns

6.9.5.1.3 JTAG Timing Diagram

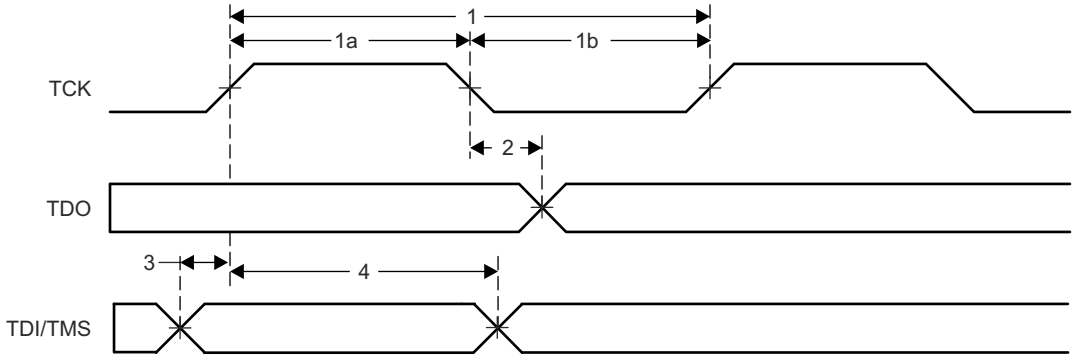

Figure 6-28. JTAG Timing

Copyright © 2026 Texas Instruments Incorporated

6.9.5.2 cJTAG Electrical Data and Timing

Section 6.9.5.2.1 lists the cJTAG timing requirements. Section 6.9.5.2.2 lists the cJTAG switching characteristics. Figure 6-29 shows the cJTAG timing.

6.9.5.2.1 cJTAG Timing Requirements

NO.			MIN	MAX	UNIT
1	$t_{c(TCK)}$	Cycle time, TCK	100		ns
1a	$t_{w(TCKH)}$	Pulse duration, TCK high (40% of t_c)	40		ns
1b	$t_{w(TCKL)}$	Pulse duration, TCK low (40% of t_c)	40		ns
3	$t_{su(TMS-TCKH)}$	Input setup time, TMS valid to TCK high	15		ns
	$t_{su(TMS-TCKL)}$	Input setup time, TMS valid to TCK low	15		ns
4	$t_{h(TCKH-TMS)}$	Input hold time, TMS valid from TCK high	2		ns
	$t_{h(TCKL-TMS)}$	Input hold time, TMS valid from TCK low	2		ns

6.9.5.2.2 cJTAG Switching Characteristics

over recommended operating conditions (unless otherwise noted)

NO.	PARAMETER		MIN	MAX	UNIT
2	$t_{d(TCKL-TMS)}$	Delay time, TCK low to TMS valid	6	20	ns
5	$t_{dis(TCKH-TMS)}$	Delay time, TCK high to TMS disable		20	ns

6.9.5.2.3 cJTAG Timing Diagram

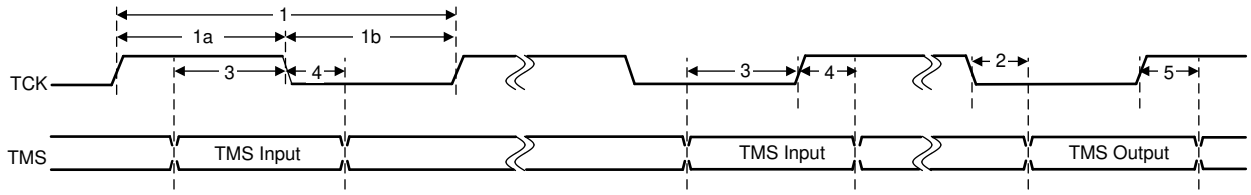

Figure 6-29. cJTAG Timing

6.9.6 GPIO Electrical Data and Timing

The peripheral signals are multiplexed with general-purpose input/output (GPIO) signals. On reset, GPIO pins are configured as inputs. For specific inputs, the user can also select the number of input qualification cycles to filter unwanted noise glitches.

The GPIO module contains an Output X-BAR which allows an assortment of internal signals to be routed to a GPIO in the GPIO mux positions denoted as OUTPUTXBARx. The GPIO module also contains an Input X-BAR which is used to route signals from any GPIO input to different IP blocks such as the ADCs, eCAPs, ePWMs, and external interrupts. For more details, see the X-BAR chapter in the *TMS320F28004x Real-Time Microcontrollers Technical Reference Manual*.

6.9.6.1 GPIO – Output Timing

Section 6.9.6.1.1 lists the general-purpose output switching characteristics. Figure 6-30 shows the general-purpose output timing.

6.9.6.1.1 General-Purpose Output Switching Characteristics

over recommended operating conditions (unless otherwise noted)

PARAMETER			MIN	MAX	UNIT
$t_{r(GPIO)}$	Rise time, GPIO switching low to high	All GPIOs except GPIO23_VSW		8(1)	ns
$t_{f(GPIO)}$	Fall time, GPIO switching high to low	All GPIOs except GPIO23_VSW		8(1)	ns
f_{GPIO}	Toggling frequency, all GPIOs except GPIO23_VSW			25	MHz

(1) Rise time and fall time vary with load. These values assume a 40-pF load.

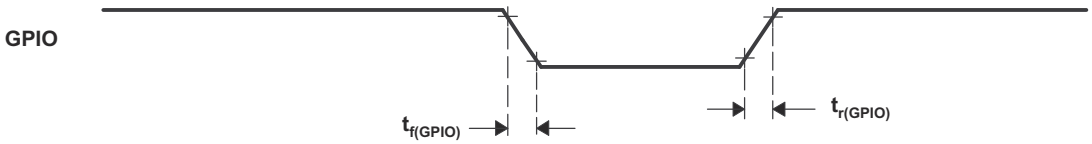

Figure 6-30. General-Purpose Output Timing

Copyright © 2026 Texas Instruments Incorporated

6.9.6.2 GPIO – Input Timing

Section 6.9.6.2.1 lists the general-purpose input timing requirements. Figure 6-31 shows the sampling mode.

6.9.6.2.1 General-Purpose Input Timing Requirements

Table 6-11. General-Purpose Input Timing Requirements

			MIN	MAX	UNIT
$t_{w(SP)}$	Sampling period	QUALPRD = 0	$1t_{c(SYSCLK)}$		cycles
		QUALPRD ≠ 0	$2t_{c(SYSCLK)}$ * QUALPRD		
$t_{w(IQSW)}$	Input qualifier sampling window		$t_{w(SP)}$ * (n(1) – 1)		cycles
$t_{w(GPI)}$ (2)	Pulse duration, GPIO low/high	Synchronous mode	$2t_{c(SYSCLK)}$		cycles
		With input qualifier	$t_{w(IQSW)} + t_{w(SP)} + 1t_{c(SYSCLK)}$		

(1) "n" represents the number of qualification samples as defined by GPxQSELn register.
(2) For $t_{w(GPI)}$, pulse width is measured from V_{IL} to V_{IL} for an active low signal and V_{IH} to V_{IH} for an active high signal.

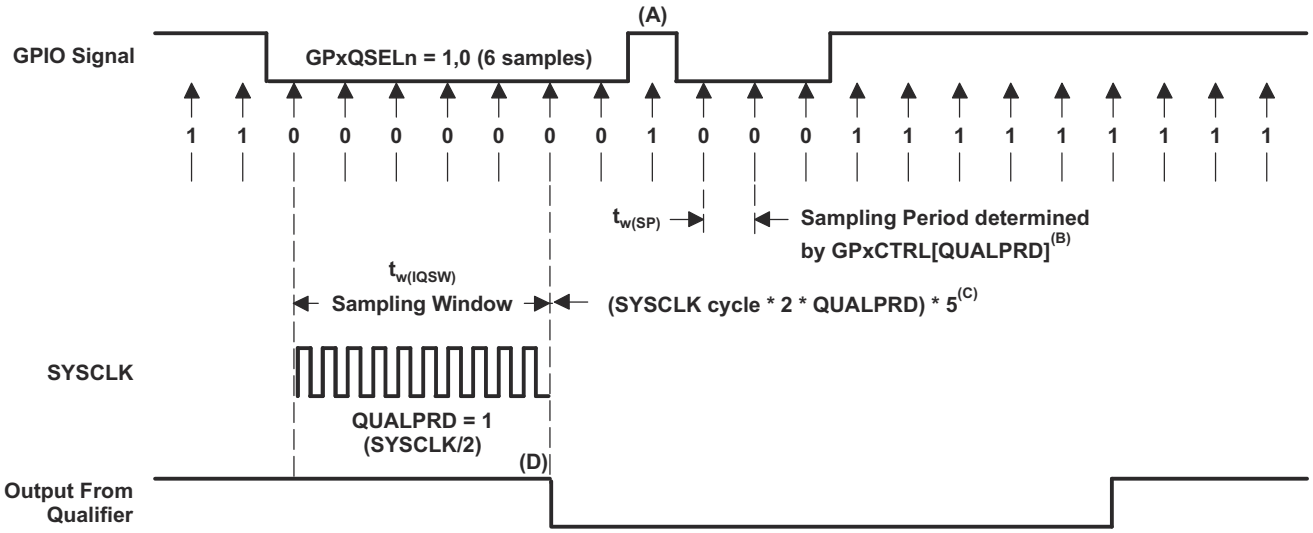

A. This glitch will be ignored by the input qualifier. The QUALPRD bit field specifies the qualification sampling period. It can vary from 00 to 0xFF. If QUALPRD = 00, then the sampling period is 1 SYSCLK cycle. For any other value "n", the qualification sampling period in 2n SYSCLK cycles (that is, at every 2n SYSCLK cycles, the GPIO pin will be sampled).
B. The qualification period selected through the GPxCTRL register applies to groups of eight GPIO pins.
C. The qualification block can take either three or six samples. The GPxQSELn Register selects which sample mode is used.
D. In the example shown, for the qualifier to detect the change, the input should be stable for 10 SYSCLK cycles or greater. In other words, the inputs should be stable for (5 × QUALPRD × 2) SYSCLK cycles. This would ensure 5 sampling periods for detection to occur. Because external signals are driven asynchronously, an 13-SYSCLK-wide pulse ensures reliable recognition.

Figure 6-31. Sampling Mode

Copyright © 2026 Texas Instruments Incorporated

6.9.6.3 Sampling Window Width for Input Signals

The following section summarizes the sampling window width for input signals for various input qualifier configurations.

Sampling frequency denotes how often a signal is sampled with respect to SYSCLK.

Sampling frequency = SYSCLK/(2 × QUALPRD), if QUALPRD ≠ 0

Sampling frequency = SYSCLK, if QUALPRD = 0

Sampling period = SYSCLK cycle × 2 × QUALPRD, if QUALPRD ≠ 0

In the previous equations, SYSCLK cycle indicates the time period of SYSCLK.

Sampling period = SYSCLK cycle, if QUALPRD = 0

In a given sampling window, either 3 or 6 samples of the input signal are taken to determine the validity of the signal. This is determined by the value written to GPxQSELn register.

Case 1:

Qualification using 3 samples

Sampling window width = (SYSCLK cycle × 2 × QUALPRD) × 2, if QUALPRD ≠ 0

Sampling window width = (SYSCLK cycle) × 2, if QUALPRD = 0

Case 2:

Qualification using 6 samples

Sampling window width = (SYSCLK cycle × 2 × QUALPRD) × 5, if QUALPRD ≠ 0

Sampling window width = (SYSCLK cycle) × 5, if QUALPRD = 0

Figure 6-32 shows the general-purpose input timing.

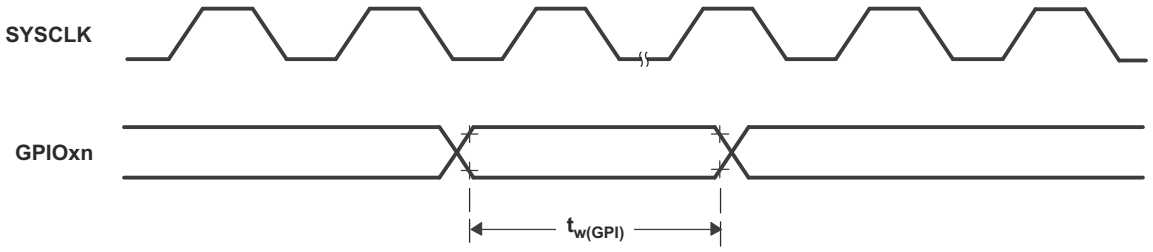

Figure 6-32. General-Purpose Input Timing

Copyright © 2026 Texas Instruments Incorporated

6.9.7 Interrupts

The C28x CPU has fourteen peripheral interrupt lines. Two of them (INT13 and INT14) are connected directly to CPU timers 1 and 2, respectively. The remaining twelve are connected to peripheral interrupt signals through the enhanced Peripheral Interrupt Expansion (ePIE) module. The ePIE multiplexes up to sixteen peripheral interrupts into each CPU interrupt line. It also expands the vector table to allow each interrupt to have its own ISR. This allows the CPU to support a large number of peripherals.

An interrupt path is divided into three stages—the peripheral, the ePIE, and the CPU. Each stage has its own enable and flag registers. This system allows the CPU to handle one interrupt while others are pending, implement and prioritize nested interrupts in software, and disable interrupts during certain critical tasks.

Figure 6-33 shows the interrupt architecture for this device.

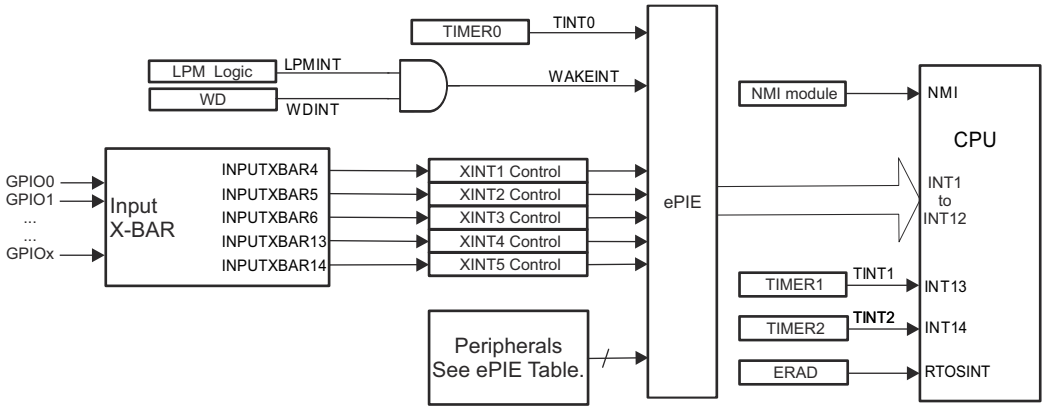

Figure 6-33. Device Interrupt Architecture

6.9.7.1 External Interrupt (XINT) Electrical Data and Timing

Section 6.9.7.1.1 lists the external interrupt timing requirements. Section 6.9.7.1.2 lists the external interrupt switching characteristics. Section 6.9.7.1.3 shows the external interrupt timing.

6.9.7.1.1 External Interrupt Timing Requirements

			MIN	MAX	UNIT
$t_{w(INT)}$	Pulse duration, INT input low/high	Synchronous	$2t_{c(SYSCLK)}$		cycles
		With qualifier(1)	$t_{w(IQSW)} + t_{w(SP)} + 1t_{c(SYSCLK)}$		

(1) For an explanation of the input qualifier parameters, see the *General-Purpose Input Timing Requirements* table.

6.9.7.1.2 External Interrupt Switching Characteristics

over recommended operating conditions (unless otherwise noted)

PARAMETER(1)		MIN	MAX	UNIT
$t_{d(INT)}$	Delay time, INT low/high to interrupt-vector fetch (2)	$t_{w(IQSW)} + 14t_{c(SYSCLK)}$	$t_{w(IQSW)} + t_{w(SP)} + 14t_{c(SYSCLK)}$	cycles

(1) For an explanation of the input qualifier parameters, see the *General-Purpose Input Timing Requirements* table.
(2) This assumes that the ISR is in a single-cycle memory.

6.9.7.1.3 Interrupt Timing Diagram

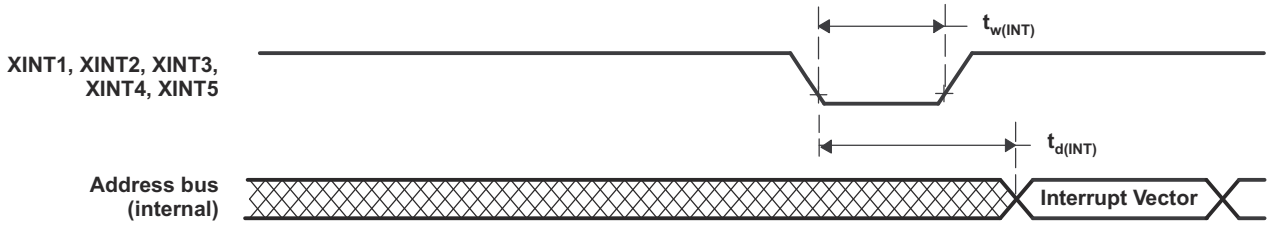

Figure 6-34. External Interrupt Timing

Copyright © 2026 Texas Instruments Incorporated

6.9.8 Low-Power Modes

This device has HALT and IDLE as two clock-gating low-power modes. STANDBY mode is not supported on this device. See the *TMS320F28004x Real-Time MCUs Silicon Errata* for more details.

Further details, as well as the entry and exit procedure, for all of the low-power modes can be found in the Low Power Modes section of the *TMS320F28004x Real-Time Microcontrollers Technical Reference Manual*.

6.9.8.1 Clock-Gating Low-Power Modes

IDLE and HALT modes on this device are similar to those on other C28x devices. Table 6-12 describes the effect on the system when any of the clock-gating low-power modes are entered.

Table 6-12. Effect of Clock-Gating Low-Power Modes on the Device

MODULES/ CLOCK DOMAIN	IDLE	HALT
SYSCLK	Active	Gated
CPUCLK	Gated	Gated
Clock to modules connected to PERx.SYSCLK	Active	Gated
WDCLK	Active	Gated if CLKSRCCTL1.WDHALTI = 0
PLL	Powered	Software must power down PLL before entering HALT.
INTOSC1	Powered	Powered down if CLKSRCCTL1.WDHALTI = 0
INTOSC2	Powered	Powered down if CLKSRCCTL1.WDHALTI = 0
Flash(1)	Powered	Powered
XTAL(2)	Powered	Powered

(1) The Flash module is not powered down by hardware in any LPM. It may be powered down using software if required by the application. For more information, see the Flash and OTP Memory section of the System Control chapter in the *TMS320F28004x Real-Time Microcontrollers Technical Reference Manual*.

(2) The XTAL is not powered down by hardware in any LPM. It may be powered down by software setting the XTALCR.OSCOFF bit to 1. This can be done at any time during the application if the XTAL is not required.

Copyright © 2026 Texas Instruments Incorporated

6.9.8.2 Low-Power Mode Wake-up Timing

Section 6.9.8.2.1 lists the IDLE mode timing requirements, Section 6.9.8.2.2 lists the switching characteristics, and Figure 6-35 shows the timing diagram for IDLE mode.

6.9.8.2.1 IDLE Mode Timing Requirements

			MIN	MAX	UNIT
$t_{w(WAKE)}$	Pulse duration, external wake-up signal	Without input qualifier(1)	$2t_{c(SYSCLK)}$		cycles
		With input qualifier(1)	$2t_{c(SYSCLK)} + t_{w(IQSW)}$		

(1) For an explanation of the input qualifier parameters, see Section 6.9.6.2.1.

6.9.8.2.2 IDLE Mode Switching Characteristics

over recommended operating conditions (unless otherwise noted)

PARAMETER		TEST CONDITIONS	MIN	MAX	UNIT
$t_{d(WAKE-IDLE)}$	Delay time, external wake signal to program execution resume (2)				cycles
	• Wake up from flash – Flash module in active state	Without input qualifier(1)		$40t_{c(SYSCLK)}$	
		With input qualifier(1)		$40t_{c(SYSCLK)} + t_{w(WAKE)}$	
	• Wake up from flash – Flash module in sleep state	Without input qualifier(1)		$6700t_{c(SYSCLK)}$ (3)	
		With input qualifier(1)		$6700t_{c(SYSCLK)}$ (3) $+ t_{w(WAKE)}$	
	• Wake up from RAM	Without input qualifier(1)		$25t_{c(SYSCLK)}$	
		With input qualifier(1)		$25t_{c(SYSCLK)} + t_{w(WAKE)}$	

(1) For an explanation of the input qualifier parameters, see Section 6.9.6.2.1.
(2) This is the time taken to begin execution of the instruction that immediately follows the IDLE instruction. Execution of an ISR (triggered by the wake-up signal) involves additional latency.
(3) This value is based on the flash power-up time, which is a function of the SYSCLK frequency, flash wait states (RWAIT), and FPAC1[PSLEEP]. For more information, see the Flash/OTP and Pump Power Modes and Wakeup section of the *TMS320F28004x Real-Time Microcontrollers Technical Reference Manual*.

6.9.8.2.3 IDLE Mode Timing Diagram

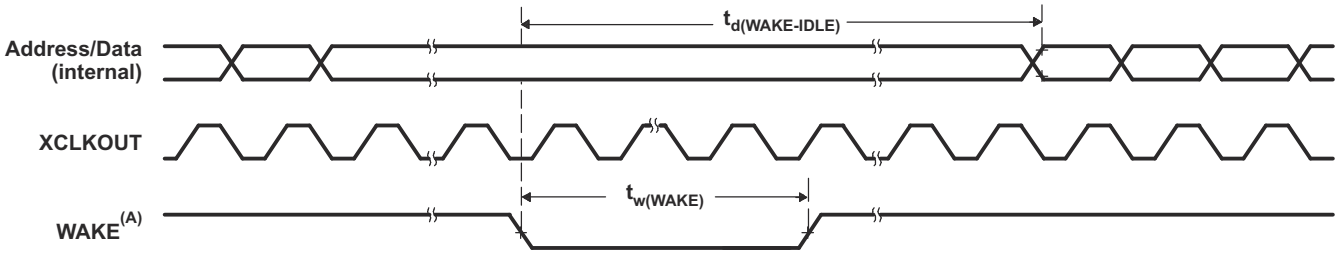

A. WAKE can be any enabled interrupt, $\overline{\text{WDINT}}$ or XRSn. After the IDLE instruction is executed, a delay of five OSCCLK cycles (minimum) is needed before the wake-up signal could be asserted.

Figure 6-35. IDLE Entry and Exit Timing Diagram

Copyright © 2026 Texas Instruments Incorporated

Section 6.9.8.2.4 lists the HALT mode timing requirements, Section 6.9.8.2.5 lists the switching characteristics, and Figure 6-36 shows the timing diagram for HALT mode.

6.9.8.2.4 HALT Mode Timing Requirements

		MIN	MAX	UNIT
$t_{w(WAKE-GPIO)}$	Pulse duration, GPIO wake-up signal(1)	t_{oscst} + $2t_{c(OSCCLK)}$		cycles
$t_{w(WAKE-XRS)}$	Pulse duration, XRSn wake-up signal(1)	t_{oscst} + $8t_{c(OSCCLK)}$		cycles

(1) For applications using X1/X2 for OSCCLK, the user must characterize their specific oscillator start-up time as it is dependent on circuit/layout external to the device. See *Crystal Oscillator Electrical Characteristics* for more information. For applications using INTOSC1 or INTOSC2 for OSCCLK, see *Internal Oscillators* for t_{oscst}. Oscillator start-up time does not apply to applications using a single-ended crystal on the X1 pin, as it is powered externally to the device.

6.9.8.2.5 HALT Mode Switching Characteristics

over recommended operating conditions (unless otherwise noted)

PARAMETER		MIN	MAX	UNIT
$t_{d(IDLE-XCOS)}$	Delay time, IDLE instruction executed to XCLKOUT stop		$16t_{c(INTOSC1)}$	cycles
$t_{d(WAKE-HALT)}$	Delay time, external wake signal end to CPU program execution resume			cycles
	• Wake up from flash – Flash module in active state		$75t_{c(OSCCLK)}$	
	• Wake up from flash – Flash module in sleep state		$17500t_{c(OSCCLK)}$ (1)	
	• Wake up from RAM		$75t_{c(OSCCLK)}$	

(1) This value is based on the flash power-up time, which is a function of the SYSCLK frequency, flash wait states (RWAIT), and FPAC1[PSLEEP]. For more information, see the Flash/OTP and Pump Power Modes and Wakeup section of the *TMS320F28004x Real-Time Microcontrollers Technical Reference Manual*.

6.9.8.2.6 HALT Mode Timing Diagram

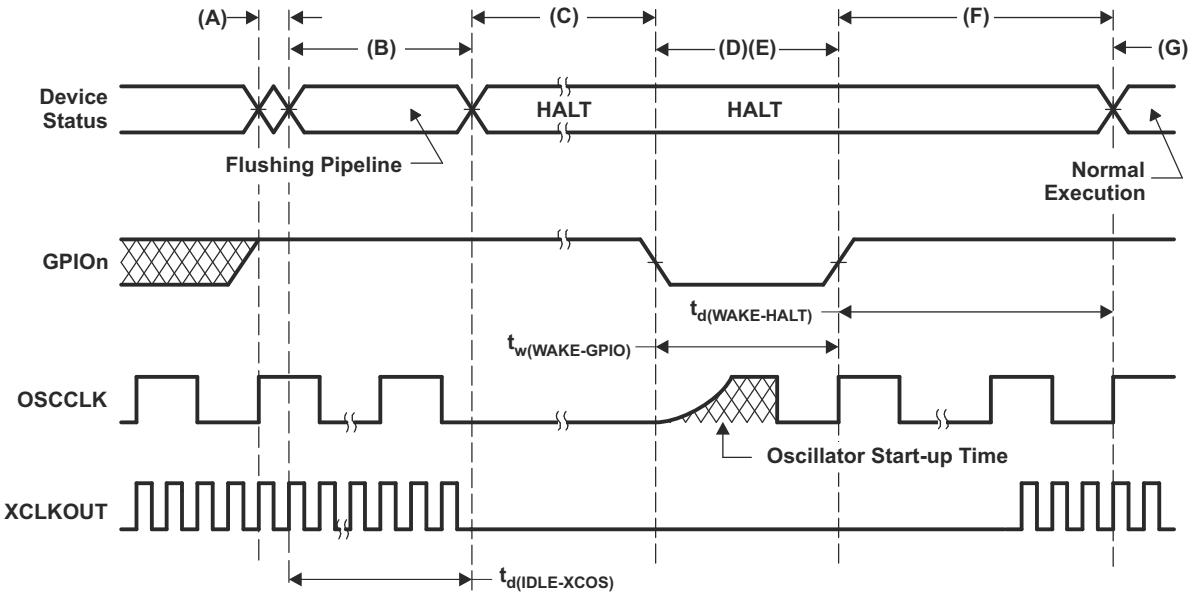

A. IDLE instruction is executed to put the device into HALT mode.
B. The LPM block responds to the HALT signal, SYSCLK is held for a maximum 16 INTOSC1 clock cycles before being turned off. This delay enables the CPU pipeline and any other pending operations to flush properly.
C. Clocks to the peripherals are turned off and the PLL is shut down. If a quartz crystal or ceramic resonator is used as the clock source, the internal oscillator is shut down as well. The device is now in HALT mode and consumes very little power. It is possible to keep the zero-pin internal oscillators (INTOSC1 and INTOSC2) and the watchdog alive in HALT MODE. This is done by writing 1 to CLKSRCCTL1.WDHALTI. After the IDLE instruction is executed, a delay of five OSCCLK cycles (minimum) is needed before the wake-up signal could be asserted.
D. When the GPIOn pin (used to bring the device out of HALT) is driven low, the oscillator is turned on and the oscillator wake-up sequence is initiated. The GPIO pin should be driven high only after the oscillator has stabilized. This enables the provision of a clean clock signal during the PLL lock sequence. Because the falling edge of the GPIO pin asynchronously begins the wake-up procedure, care should be taken to maintain a low noise environment before entering and during HALT mode.
E. The wake-up signal fed to a GPIO pin to wake up the device must meet the minimum pulse width requirement. Furthermore, this signal must be free of glitches. If a noisy signal is fed to a GPIO pin, the wake-up behavior of the device will not be deterministic and the device may not exit low-power mode for subsequent wake-up pulses.
F. When CLKIN to the core is enabled, the device will respond to the interrupt (if enabled), after some latency. The HALT mode is now exited.
G. Normal operation resumes.
H. The user must relock the PLL upon HALT wakeup to ensure a stable PLL lock.

Figure 6-36. HALT Entry and Exit Timing Diagram

Copyright © 2026 Texas Instruments Incorporated

6.10 Analog Peripherals

The analog subsystem module is described in this section.

The analog modules on this device include the ADC, PGA, temperature sensor, buffered DAC, and CMPSS.

The analog subsystem has the following features:

- Flexible voltage references
  - The ADCs are referenced to VREFHIx and VREFLOx pins.
    - VREFHIx pin voltage can be driven in externally or can be generated by an internal bandgap voltage reference.
    - The internal voltage reference range can be selected to be 0 V to 3.3 V or 0 V to 2.5 V.
- The buffered DACs are referenced to VREFHIx and VREFLOx.
  - Alternately, these DACs can be referenced to the VDAC pin and VSSA.
- The comparator DACs are referenced to VDDA and VSSA.
  - Alternately, these DACs can be referenced to the VDAC pin and VSSA.
- Flexible pin usage
  - Buffered DAC outputs, comparator subsystem inputs, PGA functions, and digital inputs are multiplexed with ADC inputs
  - Internal connection to VREFLO on all ADCs for offset self-calibration

Figure 6-37 shows the Analog Subsystem Block Diagram for the 100-pin PZ LQFP.

Figure 6-38 shows the Analog Subsystem Block Diagram for the 64-pin PM LQFP.

Figure 6-39 shows the Analog Subsystem Block Diagram for the 56-pin RSH VQFN.

Copyright © 2026 Texas Instruments Incorporated

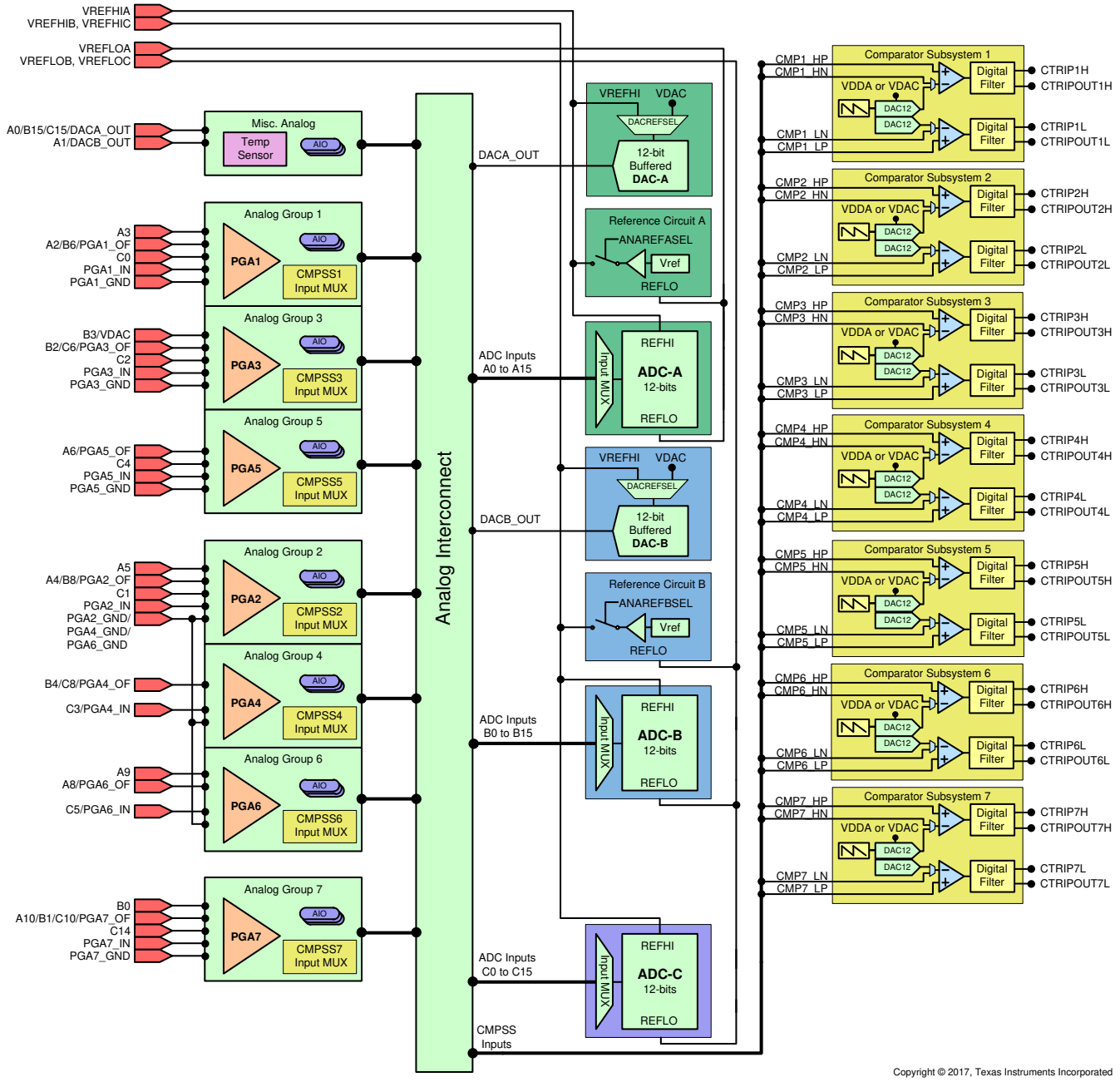

Figure 6-37. Analog Subsystem Block Diagram (100-Pin PZ LQFP)

Copyright © 2026 Texas Instruments Incorporated

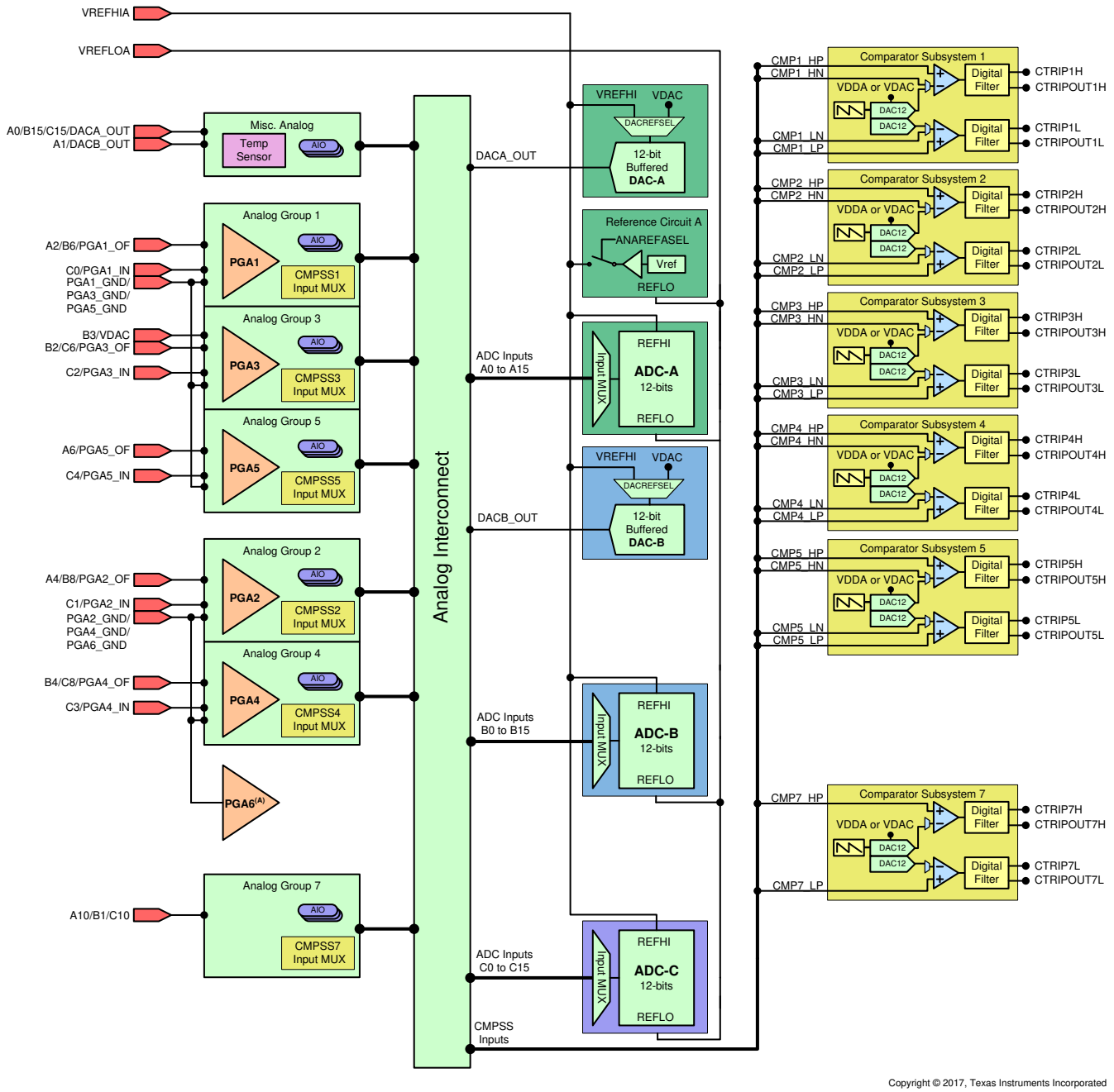

A. This PGA has no input/output connections on this package, but should be enabled and disabled at the same time as other PGAs with a shared PGA ground.

Figure 6-38. Analog Subsystem Block Diagram (64-Pin PM LQFP)

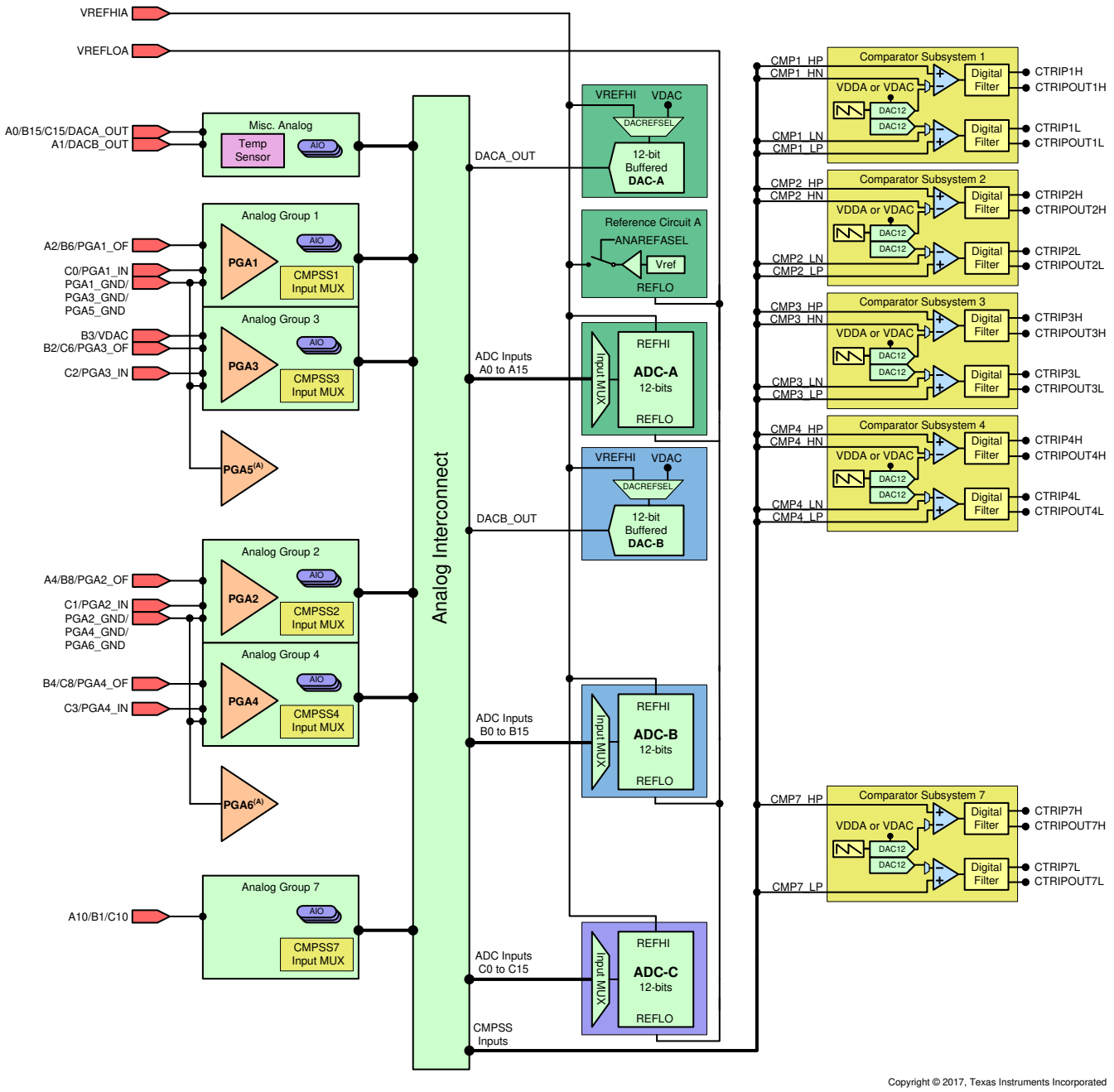

A. This PGA has no input/output connections on this package, but should be enabled and disabled at the same time as other PGAs with a shared PGA ground.

Figure 6-39. Analog Subsystem Block Diagram (56-Pin RSH VQFN)

Copyright © 2026 Texas Instruments Incorporated

Figure 6-40 shows the analog group connections. See the *Analog Pins and Internal Connections* table for the specific connections for each group for each package. The *Analog Signal Descriptions* table provides descriptions of the analog signals.

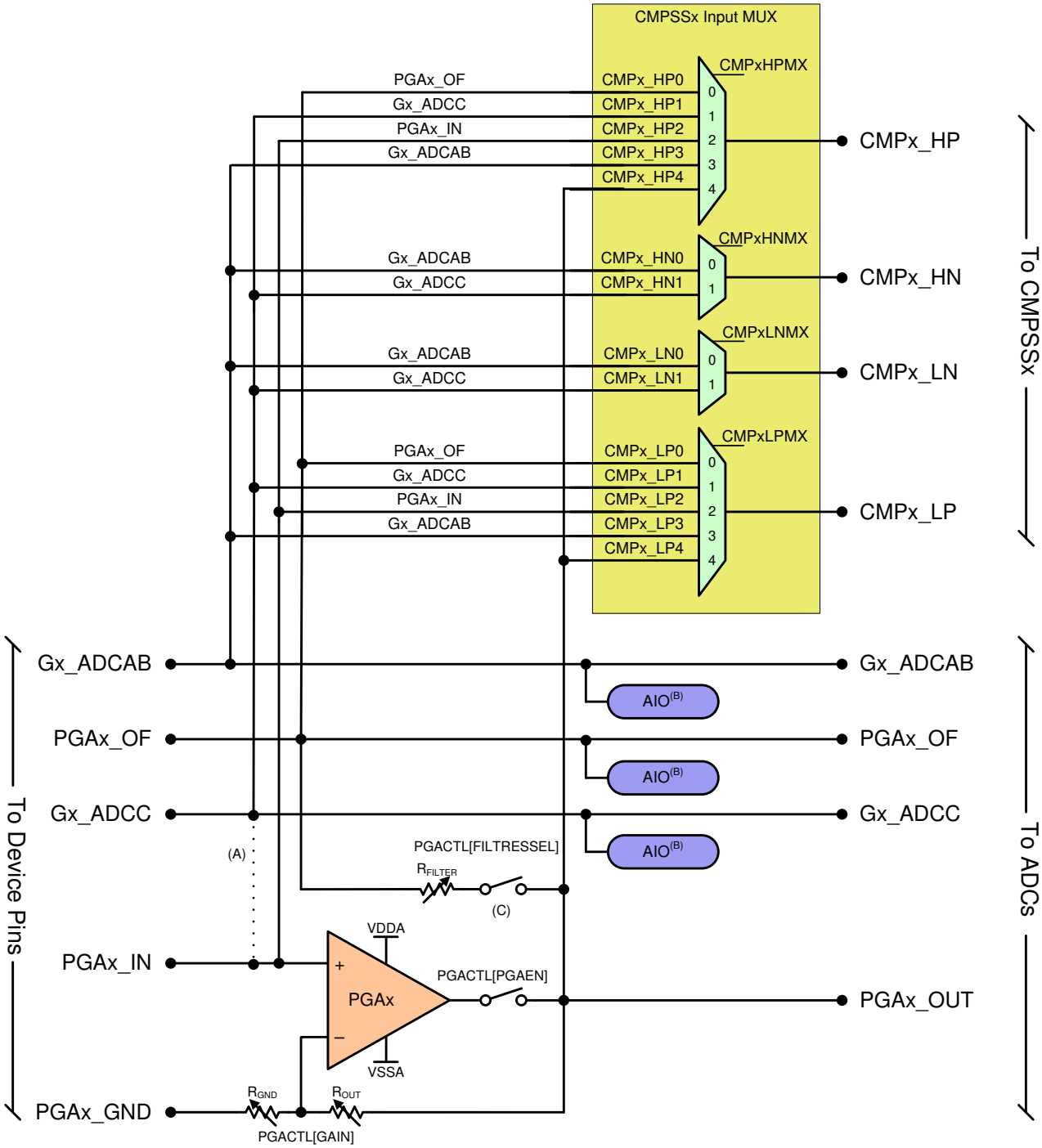

A. On lower pin-count packages, the input to Gx_ADCC will share a pin with the PGA input. If the PGA input is unused, then the ADCC input can allow the pin to be used as an ADC input, a negative comparator input, or a digital input.

B. AIOs support digital input mode only.

C. The PGA RFILTER path is not available on some device revisions. See the *TMS320F28004x Real-Time MCUs Silicon Errata* for more information.

Figure 6-40. Analog Group Connections

Copyright © 2026 Texas Instruments Incorporated

Table 6-13. Analog Pins and Internal Connections

PIN NAME	GROUP NAME	PACKAGE			ALWAYS CONNECTED (NO MUX)					COMPARATOR SUBSYSTEM (MUX)				AIO INPUT
		100 PZ	64 PM	56 RSH	ADCA	ADCB	ADCC	PGA	DAC	HIGH POSITIVE	HIGH NEGATIVE	LOW POSITIVE	LOW NEGATIVE	
VREFHIA	-	25	16	14										
VREFHIB	-	24												
VREFHIC	-													
VREFLOA	-	27	17	15	A13									
VREFLOB	-	26				B13								
VREFLOC	-						C13							
Analog Group 1										**CMP1**				
A3	G1_ADCAB	10			A3					HPMXSEL = 3	HNMXSEL = 0	LPMXSEL = 3	LNMXSEL = 0	AIO233
A2/B6/PGA1_OF	PGA1_OF	9	9	8	A2	B6		PGA1_OF		HPMXSEL = 0		LPMXSEL = 0		AIO224
C0	G1_ADCC	19	12	10			C0			HPMXSEL = 1	HNMXSEL = 1	LPMXSEL = 1	LNMXSEL = 1	AIO237
PGA1_IN	PGA1_IN	18						PGA1_IN		HPMXSEL = 2		LPMXSEL = 2		
PGA1_GND	PGA1_GND	14	10	9				PGA1_GND						
-	PGA1_OUT(1)				A11	B7		PGA1_OUT		HPMXSEL = 4		LPMXSEL = 4		
Analog Group 2										**CMP2**				
A5	G2_ADCAB	35			A5					HPMXSEL = 3	HNMXSEL = 0	LPMXSEL = 3	LNMXSEL = 0	AIO234
A4/B8/PGA2_OF	PGA2_OF	36	23	21	A4	B8		PGA2_OF		HPMXSEL = 0		LPMXSEL = 0		AIO225
C1	G2_ADCC	29	18	16			C1			HPMXSEL = 1	HNMXSEL = 1	LPMXSEL = 1	LNMXSEL = 1	AIO238
PGA2_IN	PGA2_IN	30						PGA2_IN		HPMXSEL = 2		LPMXSEL = 2		
PGA2_GND	PGA2_GND	32	20	18				PGA2_GND						
-	PGA2_OUT(1)				A12	B9		PGA2_OUT		HPMXSEL = 4		LPMXSEL = 4		
Analog Group 3										**CMP3**				
B3/VDAC	G3_ADCAB	8	8	7		B3			VDAC	HPMXSEL = 3	HNMXSEL = 0	LPMXSEL = 3	LNMXSEL = 0	AIO242
B2/C6/PGA3_OF	PGA3_OF	7	7	6		B2	C6	PGA3_OF		HPMXSEL = 0		LPMXSEL = 0		AIO226
C2	G3_ADCC	21	13	11			C2			HPMXSEL = 1	HNMXSEL = 1	LPMXSEL = 1	LNMXSEL = 1	AIO244
PGA3_IN	PGA3_IN	20						PGA3_IN		HPMXSEL = 2		LPMXSEL = 2		

Copyright © 2026 Texas Instruments Incorporated

Table 6-13. Analog Pins and Internal Connections (continued)

PIN NAME	GROUP NAME	PACKAGE			ALWAYS CONNECTED (NO MUX)					COMPARATOR SUBSYSTEM (MUX)				AIO INPUT
		100 PZ	64 PM	56 RSH	ADCA	ADCB	ADCC	PGA	DAC	HIGH POSITIVE	HIGH NEGATIVE	LOW POSITIVE	LOW NEGATIVE	
PGA3_GND	PGA3_GND	15	10	9				PGA3_GND						
-	PGA3_OUT(1)					B10	C7	PGA3_OUT		HPMXSEL = 4		LPMXSEL = 4		
Analog Group 4										**CMP4**				
B5	G4_ADCAB					B5				HPMXSEL = 3	HNMXSEL = 0	LPMXSEL = 3	LNMXSEL = 0	AIO243
B4/C8/PGA4_OF	PGA4_OF	39	24	22		B4	C8	PGA4_OF		HPMXSEL = 0		LPMXSEL = 0		AIO227
C3	G4_ADCC	31	19	17			C3			HPMXSEL = 1	HNMXSEL = 1	LPMXSEL = 1	LNMXSEL = 1	AIO245
PGA4_IN	PGA4_IN							PGA4_IN		HPMXSEL = 2		LPMXSEL = 2		
PGA4_GND	PGA4_GND	32	20	18				PGA4_GND						
-	PGA4_OUT(1)					B11	C9	PGA4_OUT		HPMXSEL = 4		LPMXSEL = 4		
Analog Group 5										**CMP5**				
A7	G5_ADCAB				A7					HPMXSEL = 3	HNMXSEL = 0	LPMXSEL = 3	LNMXSEL = 0	AIO235
A6/PGA5_OF	PGA5_OF	6	6		A6			PGA5_OF		HPMXSEL = 0		LPMXSEL = 0		AIO228
C4	G5_ADCC	17	11				C4			HPMXSEL = 1	HNMXSEL = 1	LPMXSEL = 1	LNMXSEL = 1	AIO239
PGA5_IN	PGA5_IN	16						PGA5_IN		HPMXSEL = 2		LPMXSEL = 2		
PGA5_GND	PGA5_GND	13	10	9				PGA5_GND						
-	PGA5_OUT(1)				A14			PGA5_OUT		HPMXSEL = 4		LPMXSEL = 4		
Analog Group 6										**CMP6**				
A9	G6_ADCAB	38			A9					HPMXSEL = 3	HNMXSEL = 0	LPMXSEL = 3	LNMXSEL = 0	AIO236
A8/PGA6_OF	PGA6_OF	37			A8			PGA6_OF		HPMXSEL = 0		LPMXSEL = 0		AIO229
C5	G6_ADCC	28					C5			HPMXSEL = 1	HNMXSEL = 1	LPMXSEL = 1	LNMXSEL = 1	AIO240
PGA6_IN	PGA6_IN							PGA6_IN		HPMXSEL = 2		LPMXSEL = 2		
PGA6_GND	PGA6_GND	32	20	18				PGA6_GND						

Copyright © 2026 Texas Instruments Incorporated

Table 6-13. Analog Pins and Internal Connections (continued)

PIN NAME	GROUP NAME	PACKAGE			ALWAYS CONNECTED (NO MUX)					COMPARATOR SUBSYSTEM (MUX)				AIO INPUT
		100 PZ	64 PM	56 RSH	ADCA	ADCB	ADCC	PGA	DAC	HIGH POSITIVE	HIGH NEGATIVE	LOW POSITIVE	LOW NEGATIVE	
-	PGA6_OUT(1)				A15			PGA6_OUT		HPMXSEL = 4		LPMXSEL = 4		
Analog Group 7										**CMP7**				
B0	G7_ADCAB	41				B0				HPMXSEL = 3	HNMXSEL = 0	LPMXSEL = 3	LNMXSEL = 0	AIO241
A10/B1/C10/PGA7_OF	PGA7_OF(2)	40	25	23	A10	B1	C10	PGA7_OF		HPMXSEL = 0		LPMXSEL = 0		AIO230
C14	G7_ADCC	44					C14			HPMXSEL = 1	HNMXSEL = 1	LPMXSEL = 1	LNMXSEL = 1	AIO246
PGA7_IN	PGA7_IN	43						PGA7_IN		HPMXSEL = 2		LPMXSEL = 2		
PGA7_GND	PGA7_GND	42						PGA7_GND						
-	PGA7_OUT(1)					B12	C11	PGA7_OUT		HPMXSEL = 4		LPMXSEL = 4		
Other Analog														
A0/B15/C15/DACA_OUT		23	15	13	A0	B15	C15		DACA_OUT					AIO231
A1/DACB_OUT		22	14	12	A1				DACB_OUT					AIO232
C12							C12							AIO247
-	TempSensor(1)					B14								

(1) Internal connection only; does not come to a device pin.
(2) PGA functionality not available on 64-pin and 56-pin packages.

Table 6-14. Analog Signal Descriptions

SIGNAL NAME	DESCRIPTION
AIOx	Digital input on ADC pin
Ax	ADC A Input
Bx	ADC B Input
Cx	ADC C Input
CMPx_DACH	Comparator subsystem high DAC output
CMPx_DACL	Comparator subsystem low DAC output
CMPx_HNy	Comparator subsystem high comparator negative input
CMPx_HPy	Comparator subsystem high comparator positive input
CMPx_LNy	Comparator subsystem low comparator negative input
CMPx_LPy	Comparator subsystem low comparator positive input
DACx_OUT	Buffered DAC Output
PGAx_GND	PGA Ground
PGAx_IN	PGA Input

Copyright © 2026 Texas Instruments Incorporated

Table 6-14. Analog Signal Descriptions (continued)

SIGNAL NAME	DESCRIPTION
PGAx_OF	PGA Output for filter
PGAx_OUT	PGA Output to internal ADC
TempSensor	Internal temperature sensor
VDAC	Optional external reference voltage for on-chip DACs. There is a 100-pF capacitor to VSSA on this pin whether used for ADC input or DAC reference which cannot be disabled. If this pin is used as a reference for the on-chip DACs, place at least a 1-µF capacitor on this pin.

Copyright © 2026 Texas Instruments Incorporated

6.10.1 Analog-to-Digital Converter (ADC)

The ADC module described here is a successive approximation (SAR) style ADC with resolution of 12 bits. This section refers to the analog circuits of the converter as the “core,” and includes the channel-select MUX, the sample-and-hold (S/H) circuit, the successive approximation circuits, voltage reference circuits, and other analog support circuits. The digital circuits of the converter are referred to as the “wrapper” and include logic for programmable conversions, result registers, interfaces to analog circuits, interfaces to the peripheral buses, post-processing circuits, and interfaces to other on-chip modules.

Each ADC module consists of a single sample-and-hold (S/H) circuit. The ADC module is designed to be duplicated multiple times on the same chip, allowing simultaneous sampling or independent operation of multiple ADCs. The ADC wrapper is start-of-conversion (SOC)-based (see the SOC Principle of Operation section of the Analog-to-Digital Converter (ADC) chapter in the *TMS320F28004x Real-Time Microcontrollers Technical Reference Manual*).

Each ADC has the following features:

- Resolution of 12 bits
- Ratiometric external reference set by VREFHI/VREFLO
- Selectable internal reference of 2.5 V or 3.3 V
- Single-ended signaling
- Input multiplexer with up to 16 channels
- 16 configurable SOCs
- 16 individually addressable result registers
- Multiple trigger sources
  - S/W: software immediate start
  - All ePWMs: ADCSOC A or B
  - GPIO XINT2
  - CPU Timers 0/1/2
  - ADCINT1/2
- Four flexible PIE interrupts
- Burst-mode triggering option
- Four post-processing blocks, each with:
  - Saturating offset calibration
  - Error from setpoint calculation
  - High, low, and zero-crossing compare, with interrupt and ePWM trip capability
  - Trigger-to-sample delay capture

Note

Not every channel may be pinned out from all ADCs. See Section 5 to determine which channels are available.

Copyright © 2026 Texas Instruments Incorporated

The block diagram for the ADC core and ADC wrapper are shown in Figure 6-41.

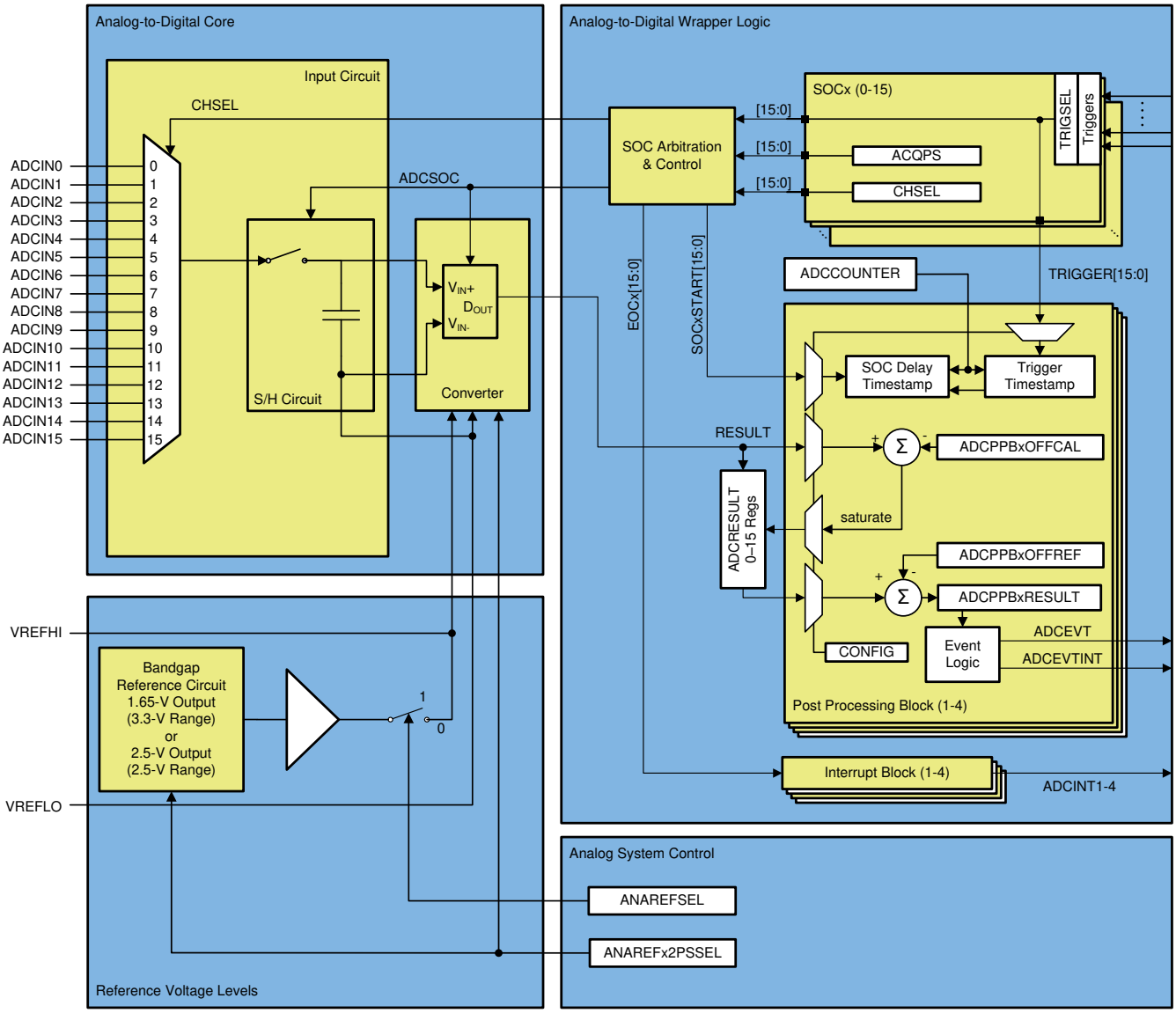

Figure 6-41. ADC Module Block Diagram

6.10.1.1 Result Register Mapping

The ADC results and ADC PPB results are duplicated for each memory bus controller in the system. Bus controllers include the CPU, CLA and DMA present on the specific part family and part number. For each bus controller, no access configuration is needed to allow read access to the result registers and no contention will occur in case multiple bus controllers try to read the ADC results simultaneously.

Copyright © 2026 Texas Instruments Incorporated

6.10.1.2 ADC Configurability

Some ADC configurations are individually controlled by the SOCs, while others are globally controlled per ADC module. Table 6-15 summarizes the basic ADC options and their level of configurability.

Table 6-15. ADC Options and Configuration Levels

OPTIONS	CONFIGURABILITY
Clock	Per module(1)
Resolution	Not configurable (12-bit resolution only)
Signal mode	Not configurable (single-ended signal mode only)
Reference voltage source	Per module
Trigger source	Per SOC(1)
Converted channel	Per SOC
Acquisition window duration	Per SOC(1)
EOC location	Per module
Burst mode	Per module(1)

(1) Writing these values differently to different ADC modules could cause the ADCs to operate asynchronously. For guidance on when the ADCs are operating synchronously or asynchronously, see the Ensuring Synchronous Operation section of the Analog-to-Digital Converter (ADC) chapter in the *TMS320F28004x Real-Time Microcontrollers Technical Reference Manual*.

6.10.1.2.1 Signal Mode

The ADC supports single-ended signaling. In single-ended mode, the input voltage to the converter is sampled through a single pin (ADCINx), referenced to VREFLO. Figure 6-42 shows the single-ended signaling mode.

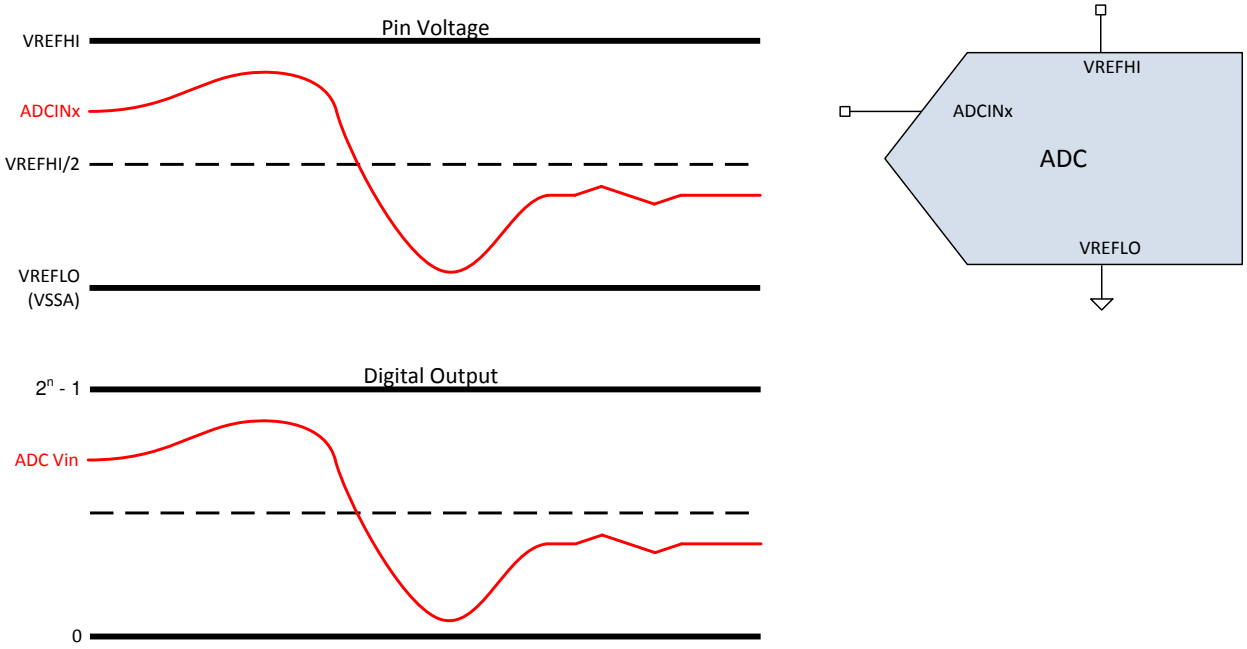

Figure 6-42. Single-ended Signaling Mode

Copyright © 2026 Texas Instruments Incorporated

6.10.1.3 ADC Electrical Data and Timing

Table 5-41 lists the ADC operating conditions. Table 5-42 lists the ADC electrical characteristics.

6.10.1.3.1 ADC Operating Conditions

over operating free-air temperature range (unless otherwise noted)

PARAMETER	TEST CONDITIONS	MIN	TYP	MAX	UNIT
ADCCLK (derived from PERx.SYSCLK)		5		50	MHz
Sample rate	100-MHz SYSCLK			3.45	MSPS
Sample window duration (set by ACQPS and PERx.SYSCLK)(1)	With 50 Ω or less R_s	75			ns
VREFHI	External Reference	2.4	2.5 or 3.0	VDDA	V
VREFHI(2)	Internal Reference = 3.3V Range		1.65		V
	Internal Reference = 2.5V Range		2.5		V
VREFLO		VSSA	VSSA	VSSA	V
VREFHI - VREFLO	External Reference	2.4		VDDA	V
Conversion range	Internal Reference = 3.3 V Range	0		3.3	V
	Internal Reference = 2.5 V Range	0		2.5	V
	External Reference	VREFLO		VREFHI	V

(1) The sample window must also be at least as long as 1 ADCCLK cycle for correct ADC operation.
(2) In internal reference mode, the reference voltage is driven out of the VREFHI pin by the device. The user should not drive a voltage into the pin in this mode.

Note

The ADC inputs should be kept below VDDA + 0.3 V during operation. If an ADC input exceeds this level, the V_{REF} internal to the device may be disturbed, which can impact results for other ADC or DAC inputs using the same V_{REF}.

Note

The VREFHI pin must be kept below VDDA + 0.3 V to ensure proper functional operation. If the VREFHI pin exceeds this level, a blocking circuit may activate, and the internal value of VREFHI may float to 0 V internally, giving improper ADC conversion or DAC output.

Copyright © 2026 Texas Instruments Incorporated

6.10.1.3.2 ADC Characteristics

over operating free-air temperature range (unless otherwise noted)

PARAMETER	TEST CONDITIONS	MIN	TYP	MAX	UNIT
General					
ADCCLK Conversion Cycles	100-MHz SYSCLK	10.1		11	ADCCLKs
Power Up Time	External Reference mode			500	µs
	Internal Reference mode			5000	µs
	Internal Reference mode, when switching between 2.5-V range and 3.3-V range.			5000	µs
VREFHI input current(1)			130		µA
Internal Reference Capacitor Value(2)		2.2			µF
External Reference Capacitor Value(2)		2.2			µF
DC Characteristics					
Gain Error	Internal reference	–45		45	LSB
	External reference	–5	±3	5	
Offset Error		–5	±2	5	LSB
Channel-to-Channel Gain Error			±2		LSB
Channel-to-Channel Offset Error			±2		LSB
ADC-to-ADC Gain Error	Identical VREFHI and VREFLO for all ADCs		±4		LSB
ADC-to-ADC Offset Error	Identical VREFHI and VREFLO for all ADCs		±2		LSB
DNL Error		>–1	±0.5	1	LSB
INL Error		–2	±1.0	2	LSB
ADC-to-ADC Isolation	VREFHI = 2.5 V, synchronous ADCs	–1		1	LSBs
	VREFHI = 2.5 V, asynchronous ADCs	Not Supported			
AC Characteristics					
SNR(3)	VREFHI = 2.5 V, fin = 100 kHz, SYSCLK from X1		68.8		dB
	VREFHI = 2.5 V, fin = 100 kHz, SYSCLK from INTOSC		60.1		
	VREFHI = 2.5 V, fin = 100 kHz, SYSCLK from X1, VDD supplied from internal DC-DC regulator(4)		67.5		
THD(3)	VREFHI = 2.5 V, fin = 100 kHz		–80.6		dB
SFDR(3)	VREFHI = 2.5 V, fin = 100 kHz		79.2		dB
SINAD(3)	VREFHI = 2.5 V, fin = 100 kHz, SYSCLK from X1		68.5		dB
	VREFHI = 2.5 V, fin = 100 kHz, SYSCLK from INTOSC		60.0		
ENOB(3)	VREFHI = 2.5 V, fin = 100 kHz, SYSCLK from X1, Single ADC		11.0		bits
	VREFHI = 2.5 V, fin = 100 kHz, SYSCLK from X1, synchronous ADCs		11.0		
	VREFHI = 2.5 V, fin = 100 kHz, SYSCLK from X1, asynchronous ADCs		Not Supported		

Copyright © 2026 Texas Instruments Incorporated

6.10.1.3.2 ADC Characteristics (continued)

over operating free-air temperature range (unless otherwise noted)

PARAMETER	TEST CONDITIONS	MIN	TYP	MAX	UNIT
PSRR	VDD = 1.2-V DC + 100mV DC up to Sine at 1 kHz		60		dB
	VDD = 1.2-V DC + 100 mV DC up to Sine at 300 kHz		57		
	VDDA = 3.3-V DC + 200 mV DC up to Sine at 1 kHz		60		
	VDDA = 3.3-V DC + 200 mV Sine at 900 kHz		57		

(1) Load current on VREFHI increases when ADC input is greater than VDDA. This causes inaccurate conversions.
(2) A ceramic capacitor with package size of 0805 or smaller is preferred. Up to ±20% tolerance is acceptable.
(3) IO activity is minimized on pins adjacent to ADC input and VREFHI pins as part of best practices to reduce capacitive coupling and crosstalk.
(4) Noise impact from the DCDC regulator to the ADC will be strongly dependent on PCB layout.

6.10.1.3.3 ADC Input Model

The ADC input characteristics are given by Table 6-16 and Figure 6-43.

Table 6-16. Input Model Parameters

	DESCRIPTION	REFERENCE MODE	VALUE
C_p	Parasitic input capacitance	All	See Table 6-17
R_{on}	Sampling switch resistance	External Reference, 2.5-V Internal Reference	500 Ω
		3.3-V Internal Reference	860 Ω
C_h	Sampling capacitor	External Reference, 2.5-V Internal Reference	12.5 pF
		3.3-V Internal Reference	7.5 pF
R_s	Nominal source impedance	All	50 Ω

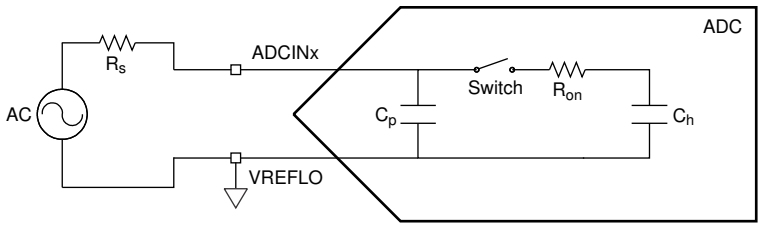

Figure 6-43. Input Model

This input model should be used with actual signal source impedance to determine the acquisition window duration. For more information, see the Choosing an Acquisition Window Duration section of the Analog-to-Digital Converter (ADC) chapter in the *TMS320F28004x Real-Time Microcontrollers Technical Reference Manual*. For more information about charge-sharing driving circuits, see the *Charge-Sharing Driving Circuits for C2000 ADCs* application report. For recommendations on improving ADC input circuits, see the *ADC Input Circuit Evaluation for C2000 MCUs* application report.

Copyright © 2026 Texas Instruments Incorporated

Table 6-17 lists the parasitic capacitance on each channel.

Table 6-17. Per-Channel Parasitic Capacitance

ADC CHANNEL	C_p (pF)	
	COMPARATOR DISABLED	COMPARATOR ENABLED
ADCINA0	12.7	15.2
ADCINA1	13.7	16.2
ADCINA2	9.2	11.7
ADCINA3	6.9	9.4
ADCINA4	9.2	11.7
ADCINA5	7.5	10
ADCINA6	8.0	10.5
ADCINA7	7.0	9.5
ADCINA8	10.0	12.5
ADCINA9	8.1	10.6
ADCINA10	9.3	11.8
ADCINB0	7.1	9.6
ADCINB1	9.3	11.8
ADCINB2	9.6	12.1
ADCINB3(1)	125.6	128.1
ADCINB4	8.8	11.3
ADCINB5	7.1	9.6
ADCINB6	9.2	11.7
ADCINB8	9.2	11.7
ADCINB15	12.7	15.2
ADCINC0	6.4	8.9
ADCINC1	6.1	8.6
ADCINC2	5.24	7.74
ADCINC3	5.5	8
ADCINC4	6.2	8.7
ADCINC5	5.6	8.1
ADCINC6	9.6	12.1
ADCINC8	8.8	11.3
ADCINC10	9.3	11.8
ADCINC12	4.1	6.6
ADCINC14	4.5	7
ADCINC15	12.7	15.2

(1) This pin is also used to supply reference voltage for COMPDAC and GPDAC, and includes an internal decoupling capacitor.

Copyright © 2026 Texas Instruments Incorporated

6.10.1.3.4 ADC Timing Diagrams

Figure 6-44 shows the ADC conversion timings for two SOCs given the following assumptions:

- SOC0 and SOC1 are configured to use the same trigger.
- No other SOCs are converting or pending when the trigger occurs.
- The round-robin pointer is in a state that causes SOC0 to convert first.
- ADCINTSEL is configured to set an ADCINT flag upon end of conversion for SOC0 (whether this flag propagates through to the CPU to cause an interrupt is determined by the configurations in the PIE module).

Table 6-18 lists the descriptions of the ADC timing parameters. Table 6-19 lists the ADC timings.

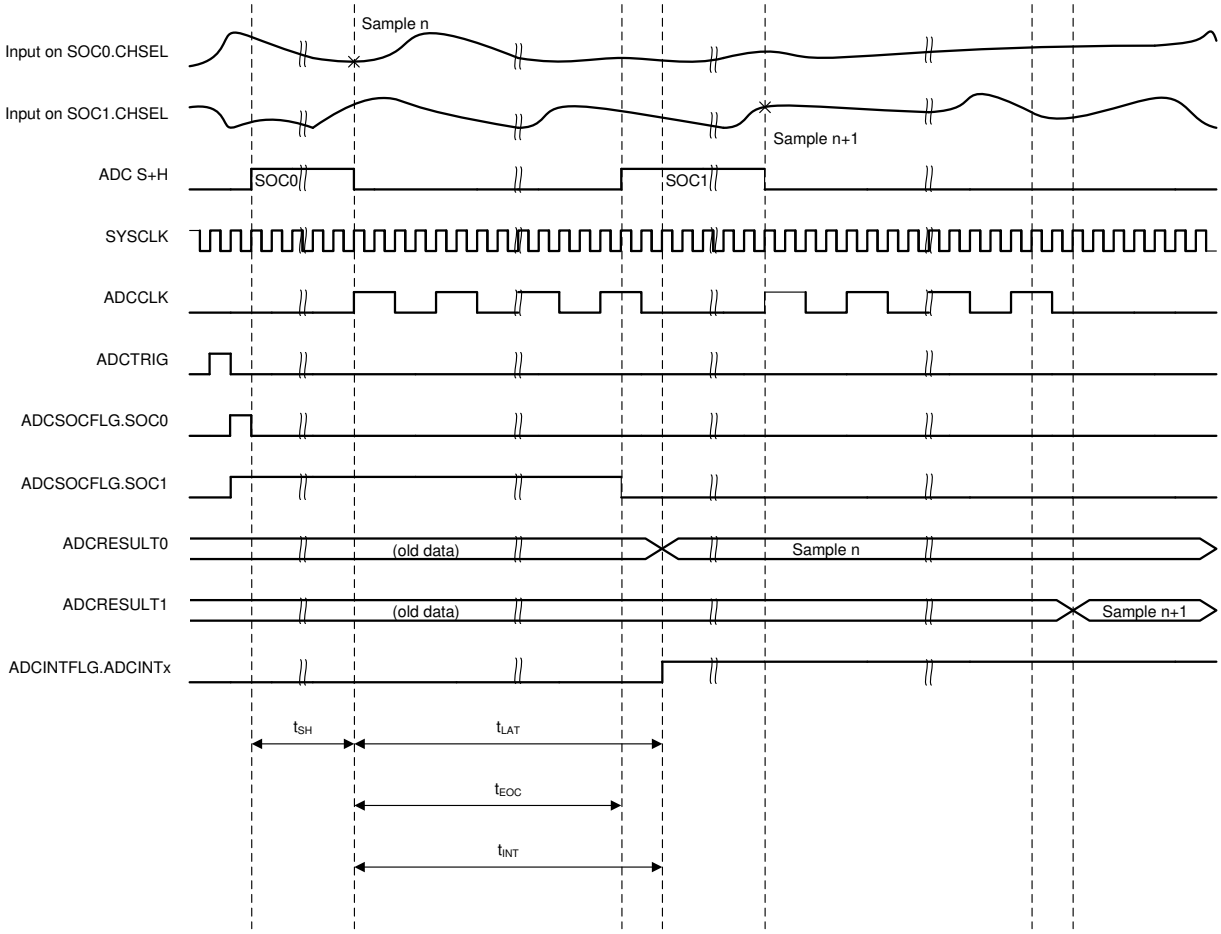

Figure 6-44. ADC Timings

Table 6-18. ADC Timing Parameters

PARAMETER	DESCRIPTION
t_{SH}	The duration of the S+H window. At the end of this window, the value on the S+H capacitor becomes the voltage to be converted into a digital value. The duration is given by (ACQPS + 1) SYSCLK cycles. ACQPS can be configured individually for each SOC, so t_{SH} will not necessarily be the same for different SOCs. **Note:** The value on the S+H capacitor will be captured approximately 5 ns before the end of the S+H window regardless of device clock settings.
t_{LAT}	The time from the end of the S+H window until the ADC results latch in the ADCRESULTx register. If the ADCRESULTx register is read before this time, the previous conversion results will be returned.
t_{EOC}	The time from the end of the S+H window until the S+H window for the next ADC conversion can begin. The subsequent sample can start before the conversion results are latched.
t_{INT}	The time from the end of the S+H window until an ADCINT flag is set (if configured). If the INTPULSEPOS bit in the ADCCTL1 register is set, t_{INT} will coincide with the conversion results being latched into the result register. If the INTPULSEPOS bit is 0, t_{INT} will coincide with the end of the S+H window. If t_{INT} triggers a read of the ADC result register (directly through DMA or indirectly by triggering an ISR that reads the result), care must be taken to ensure the read occurs after the results latch (otherwise, the previous results will be read). If the INTPULSEPOS bit is 0, and the OFFSET field in the ADCINTCYCLE register is not 0, then there will be a delay of OFFSET SYSCLK cycles before the ADCINT flag is set. This delay can be used to enter the ISR or trigger the DMA at exactly the time the sample is ready.

Table 6-19. ADC Timings

ADCCLK PRESCALE		SYSCLK CYCLES				ADCCLK CYCLES
ADCCTL2 [PRESCALE]	RATIO ADCCLK:SYSCLK	t_{EOC}	t_{LAT} (1)	$t_{INT(EARLY)}$ (2)	$t_{INT(LATE)}$	t_{EOC}
0	1	11	13	1	11	11
2	2	21	23	1	21	10.5
4	3	31	34	1	31	10.3
6	4	41	44	1	41	10.3
8	5	51	55	1	51	10.2
10	6	61	65	1	61	10.2
12	7	71	76	1	71	10.1
14	8	81	86	1	81	10.1

(1) Refer to the "ADC: DMA Read of Stale Result" advisory in the *TMS320F28004x Real-Time MCUs Silicon Errata*.
(2) By default, t_{INT} occurs one SYSCLK cycle after the S+H window if INTPULSEPOS is 0. This can be changed by writing to the OFFSET field in the ADCINTCYCLE register.

Copyright © 2026 Texas Instruments Incorporated

6.10.2 Programmable Gain Amplifier (PGA)

The Programmable Gain Amplifier (PGA) is used to amplify an input voltage for the purpose of increasing the effective resolution of the downstream ADC and CMPSS modules.

The integrated PGA helps to reduce cost and design effort for many control applications that traditionally require external, stand-alone amplifiers. On-chip integration ensures that the PGA is compatible with the downstream ADC and CMPSS modules. Software-selectable gain and filter settings make the PGA adaptable to various performance needs.

The PGA has the following features:

- Four programmable gain modes: 3x, 6x, 12x, 24x
- Internally powered by VDDA and VSSA
- Support for Kelvin ground connections using PGA_GND pin
- Embedded series resistors for RC filtering

The active component in the PGA is an embedded operational amplifier (op amp) that is configured as a noninverting amplifier with internal feedback resistors. These internal feedback resistor values are paired to produce software selectable voltage gains.

Three PGA signals are available at the device pins:

- PGA_IN is the positive input to the PGA op amp. The signal applied to this pin will be amplified by the PGA.
- PGA_GND is the Kelvin ground reference for the PGA_IN signal. Ideally, the PGA_GND reference is equal to VSSA; however, the PGA can tolerate small voltage offsets from VSSA.
- PGA_OF supports op amp output filtering with RC components. The filtered signal is available for sampling and monitoring by internal ADC and CMPSS modules. The PGA RFILTER path is not available on some device revisions. See the *TMS320F28004x Real-Time MCUs Silicon Errata* for more information.

PGA_OUT is an internal signal at the op amp output. It is available for sampling and monitoring by the internal ADC and CMPSS modules. Figure 6-45 shows the PGA block diagram.

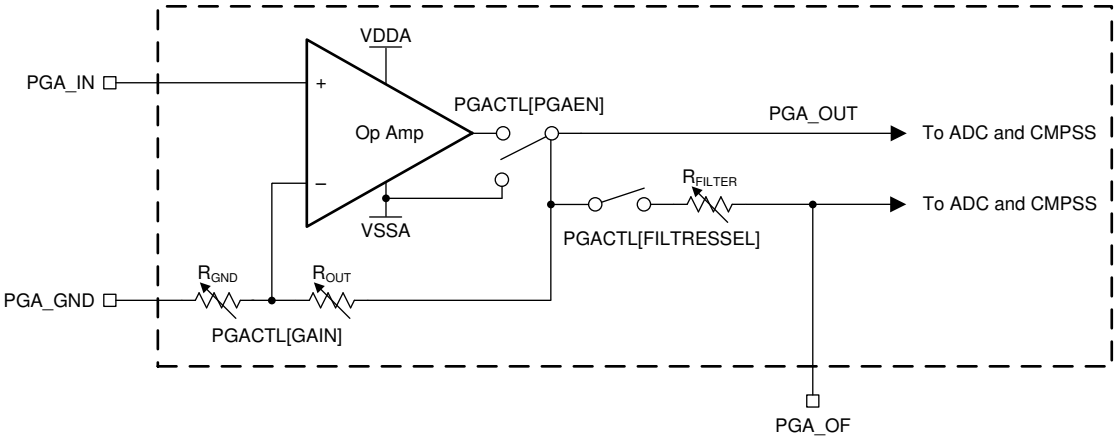

Figure 6-45. PGA Block Diagram

6.10.2.1 PGA Electrical Data and Timing

Section 6.10.2.1.1 lists the PGA operating conditions. Section 6.10.2.1.2 lists the PGA characteristics.

6.10.2.1.1 PGA Operating Conditions

over recommended operating conditions (unless otherwise noted)

PARAMETER	TEST CONDITIONS	MIN	TYP	MAX	UNIT
PGA Output Range(1)		VSSA + 0.35		VDDA – 0.35	V
PGA GND Range		–50		200	mV
Min ADC S+H (No Filter; Gain = 3, 6, 12)	Settling within ±1 ADC LSB Accuracy	160			ns
Min ADC S+H (No Filter; Gain = 24)	Settling within ±2 ADC LSB Accuracy	200			ns

(1) This is the linear output range of the PGA. The PGA can output voltages outside this range, but the voltages will not be linear.

6.10.2.1.2 PGA Characteristics

over recommended operating conditions (unless otherwise noted)

PARAMETER	TEST CONDITIONS	MIN	TYP	MAX	UNIT
General					
Gain Settings			3, 6, 12, 24		
Input Bias Current			2		nA
Short Circuit Current			35		mA
Full Scale Step Response (No Filter)	Settling within ±2 ADC LSB Accuracy			450	ns
Settling Time	Gain Switching			10	µs
Slew Rate	Gain = 3	15	20		V/µs
	Gain = 6	31	37		V/µs
	Gain = 12	61	73		V/µs
	Gain = 24	78	98		V/µs
R_{GND}	Gain = 3		9		kΩ
	Gain = 6		4.5		kΩ
	Gain = 12		2.25		kΩ
	Gain = 24		1.125		kΩ
R_{OUT}	Gain = 3		18		kΩ
	Gain = 6		22.5		kΩ
	Gain = 12		24.75		kΩ
	Gain = 24		25.875		kΩ
R_{FILT}	Gain = 3	40			Ω
	Gain = 6	50			
	Gain = 12	80			
	Gain = 24	100			
Filter Resistor Targets	R_{FILT} = 200 Ω	145	190	234	Ω
	R_{FILT} = 160 Ω	117	153	188	Ω
	R_{FILT} = 130 Ω	95	125	154	Ω
	R_{FILT} = 100 Ω	71	96	120	Ω
	R_{FILT} = 80 Ω	55	77	98	Ω
	R_{FILT} = 50 Ω	31	49	66	Ω
Power Up Time				500	µs

Copyright © 2026 Texas Instruments Incorporated

6.10.2.1.2 PGA Characteristics (continued)

over recommended operating conditions (unless otherwise noted)

PARAMETER	TEST CONDITIONS	MIN	TYP	MAX	UNIT
DC Characteristics[5]					
Gain Error[1]	Gain = 3, 6, 12	–0.5		0.5	%
	Gain = 24	–0.8		0.8	%
Gain Temp Coefficient			±0.004		%/C
Offset Error[2]	Input Referred	–1.5		1.5	mV
Offset Temp Coefficient	Input Referred		±5.5		µV/C
DC Code Spread			2.5		12b LSB
AC Characteristics					
Bandwidth[3]	Gain = 3 (small signal)		30		MHz
	Gain = 6 (small signal)		27		MHz
	Gain = 12 (small signal)		13		MHz
	Gain = 24 (small signal)		9		MHz
	Gain = 3 (large signal)		15		MHz
	Gain = 6 (large signal)		14		MHz
	Gain = 12 (large signal)		9		MHz
	Gain = 24 (large signal)		6		MHz
THD[4]	DC		–78		dB
	Up to 100 kHz		–70		dB
CMRR	DC		–60		dB
	Up to 100 kHz		–50		dB
PSRR[4]	DC		–75		dB
	Up to 100 kHz		–50		dB
Noise PSD[4]	1 kHz		200		nV/sqrt(Hz)
Integrated Noise (Input Referred)[4]	3 Hz to 30 MHz		100		µV

(1) Includes ADC gain error in external reference mode.
(2) Includes ADC offset error in external reference mode.
(3) 3dB bandwidth.
(4) Performance of PGA alone.
(5) The DNL/INL of the PGA is within the DNL/INL tolerance of the ADC and therefore not shown separately.

Copyright © 2026 Texas Instruments Incorporated

6.10.2.1.3 PGA Typical Characteristics Graphs

Figure 6-46 shows the input bias current versus temperature.

Note

For Figure 6-46, the following conditions apply (unless otherwise noted):

- T_A = 30°C
- VDDA = 3.3 V
- VDD = 1.2 V

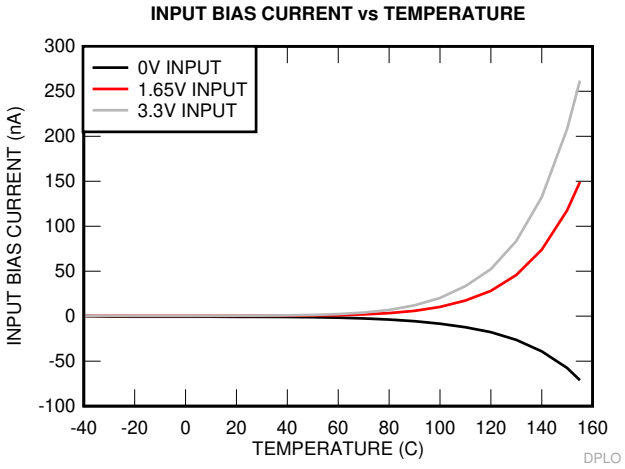

Figure 6-46. Input Bias Current Versus Temperature

Copyright © 2026 Texas Instruments Incorporated

6.10.3 Temperature Sensor

6.10.3.1 Temperature Sensor Electrical Data and Timing

The temperature sensor can be used to measure the device junction temperature. The temperature sensor is sampled through an internal connection to the ADC and translated into a temperature through TI-provided software. When sampling the temperature sensor, the ADC must meet the acquisition time in Section 6.10.3.1.1.

6.10.3.1.1 Temperature Sensor Characteristics

over recommended operating conditions (unless otherwise noted)

PARAMETER		TEST CONDITIONS	MIN	TYP	MAX	UNIT
T_{acc}	Temperature Accuracy	External reference		±15		°C
$t_{startup}$	Start-up time (TSNSCTL[ENABLE] to sampling temperature sensor)			500		µs
t_{SH}	ADC sample-and-hold time		450			ns

6.10.4 Buffered Digital-to-Analog Converter (DAC)

The buffered DAC module consists of an internal 12-bit DAC and an analog output buffer that can drive an external load. For driving even higher loads than typical, a trade-off can be made between load size and output voltage swing. For the load conditions of the buffered DAC, see Section 6.10.4.1. The buffered DAC is a general-purpose DAC that can be used to generate a DC voltage or AC waveforms such as sine waves, square waves, triangle waves and so forth. Software writes to the DAC value register can take effect immediately or can be synchronized with EPWMSYNCO events.

Each buffered DAC has the following features:

- 12-bit resolution
- Selectable reference voltage source
- x1 and x2 gain modes when using internal VREFHI
- Ability to synchronize with EPWMSYNCO

The block diagram for the buffered DAC is shown in Figure 6-47.

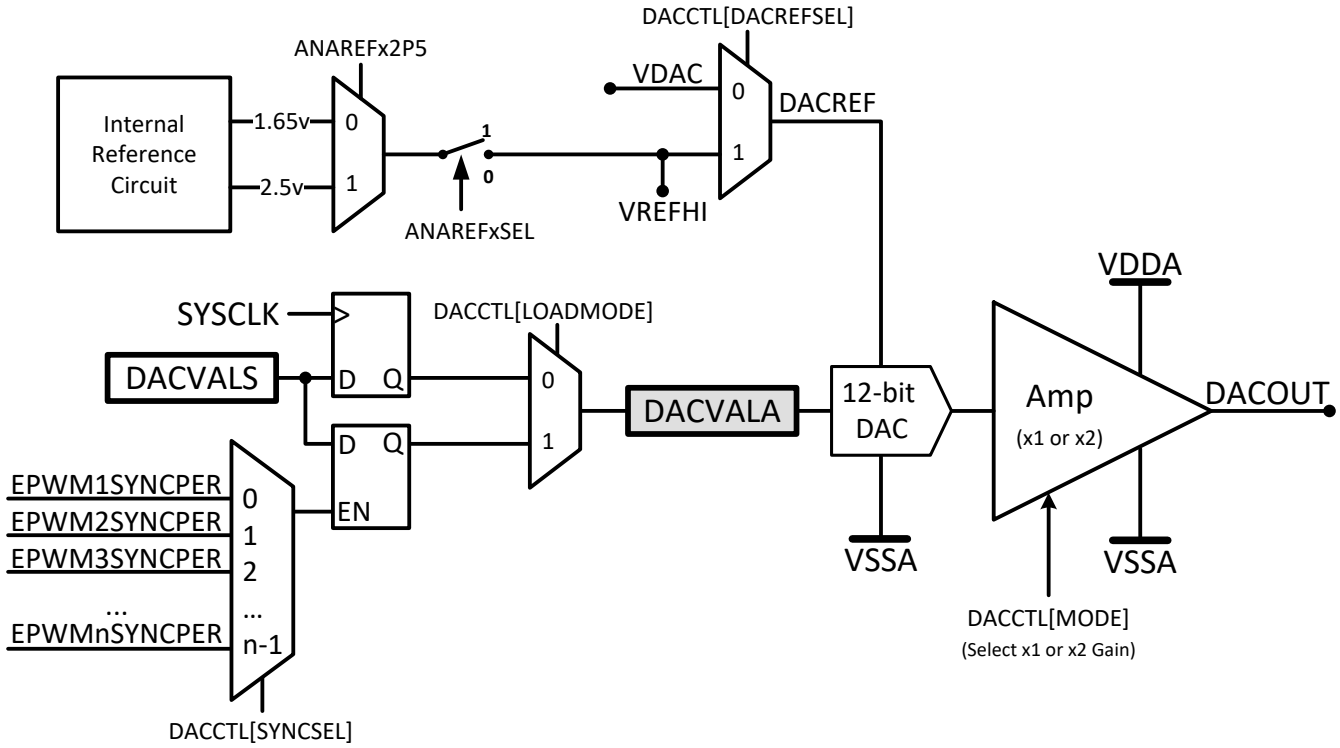

Figure 6-47. DAC Module Block Diagram

Copyright © 2026 Texas Instruments Incorporated

6.10.4.1 Buffered DAC Electrical Data and Timing

Section 6.10.4.1.1 lists the buffered DAC operating conditions. Section 6.10.4.1.2 lists the buffered DAC electrical characteristics.

6.10.4.1.1 Buffered DAC Operating Conditions

over recommended operating conditions (unless otherwise noted)(1)

PARAMETER		TEST CONDITIONS	MIN	TYP	MAX	UNIT
R_L	Resistive Load(2)		5			kΩ
C_L	Capacitive Load				100	pF
V_{OUT}	Valid Output Voltage Range(3)	R_L = 5 kΩ	0.3		VDDA – 0.3	V
		R_L = 1 kΩ	0.6		VDDA – 0.6	V
Reference Voltage(4)		VDAC or VREFHI	2.4	2.5 or 3.0	VDDA	V

(1) Typical values are measured with VREFHI = 3.3 V and VREFLO = 0 V, unless otherwise noted. Minimum and maximum values are tested or characterized with VREFHI = 2.5 V and VREFLO = 0 V.
(2) DAC can drive a minimum resistive load of 1 kΩ, but the output range will be limited.
(3) This is the linear output range of the DAC. The DAC can generate voltages outside this range, but the output voltage will not be linear due to the buffer.
(4) For best PSRR performance, VDAC or VREFHI should be less than VDDA.

6.10.4.1.2 Buffered DAC Electrical Characteristics

over recommended operating conditions (unless otherwise noted)(1)

PARAMETER		TEST CONDITIONS	MIN	TYP	MAX	UNIT
General						
Resolution				12		bits
Load Regulation			–1		1	mV/V
Glitch Energy				1.5		V-ns
Voltage Output Settling Time Full-Scale		Settling to 2 LSBs after 0.3V-to-3V transition			2	µs
Voltage Output Settling Time 1/4th Full-Scale		Settling to 2 LSBs after 0.3V-to-0.75V transition			1.6	µs
Voltage Output Slew Rate		Slew rate from 0.3V-to-3V transition	2.8		4.5	V/µs
Load Transient Settling Time(6)		5-kΩ Load			328	ns
		1-kΩ Load			557	ns
Reference Input Resistance(2)		VDAC or VREFHI	160	200	240	kΩ
TPU	Power Up Time	External Reference mode			500	µs
		Internal Reference mode			5000	µs
DC Characteristics						
Offset	Offset Error	Midpoint	–10		10	mV
Gain	Gain Error(3)		–2.5		2.5	% of FSR
DNL	Differential Non Linearity(4)	Endpoint corrected	–1	±0.4	1	LSB
INL	Integral Non Linearity	Endpoint corrected	–5	±2	5	LSB
AC Characteristics						
Output Noise		Integrated noise from 100 Hz to 100 kHz		600		µVrms
		Noise density at 10 kHz		800		nVrms/√Hz
SNR	Signal to Noise Ratio	1 kHz, 200 KSPS		64		dB
THD	Total Harmonic Distortion	1 kHz, 200 KSPS		–64.2		dB
SFDR	Spurious Free Dynamic Range	1 kHz, 200 KSPS		66		dB

Copyright © 2026 Texas Instruments Incorporated

6.10.4.1.2 Buffered DAC Electrical Characteristics (continued)

over recommended operating conditions (unless otherwise noted)(1)

PARAMETER		TEST CONDITIONS	MIN	TYP	MAX	UNIT
SINAD	Signal to Noise and Distortion Ratio	1 kHz, 200 KSPS		61.7		dB
PSRR	Power Supply Rejection Ratio(5)	DC		70		dB
		100 kHz		30		dB

(1) Typical values are measured with VREFHI = 3.3 V and VREFLO = 0 V, unless otherwise noted. Minimum and maximum values are tested or characterized with VREFHI = 2.5 V and VREFLO = 0 V.
(2) Per active Buffered DAC module.
(3) Gain error is calculated for linear output range.
(4) The DAC output is monotonic.
(5) VREFHI = 3.2 V, VDDA = 3.3 V DC + 100 mV Sine.
(6) Settling to within 3LSBs.

Note

The VDAC pin must be kept below VDDA + 0.3 V to ensure proper functional operation. If the VDAC pin exceeds this level, a blocking circuit may activate, and the internal value of VDAC may float to 0 V internally, giving improper DAC output.

Note

The VREFHI pin must be kept below VDDA + 0.3 V to ensure proper functional operation. If the VREFHI pin exceeds this level, a blocking circuit may activate, and the internal value of VREFHI may float to 0 V internally, giving improper ADC conversion or DAC output.

Copyright © 2026 Texas Instruments Incorporated

6.10.4.1.3 Buffered DAC Illustrative Graphs

Figure 6-48 shows the buffered DAC offset. Figure 6-49 shows the buffered DAC gain. Figure 6-50 shows the buffered DAC linearity.

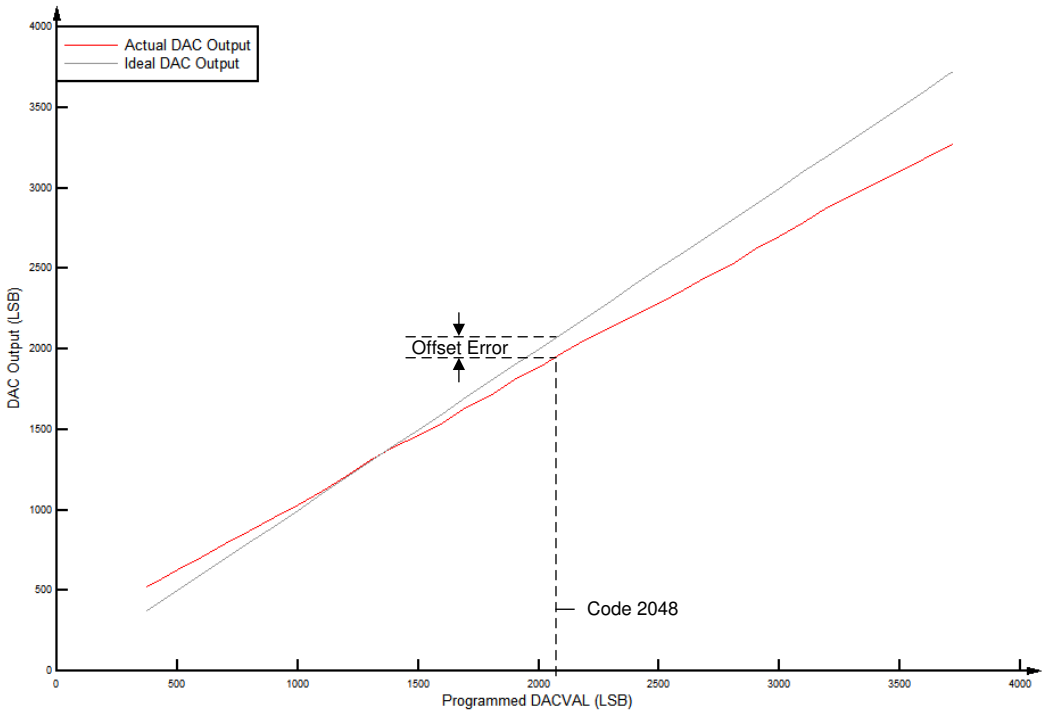

Figure 6-48. Buffered DAC Offset

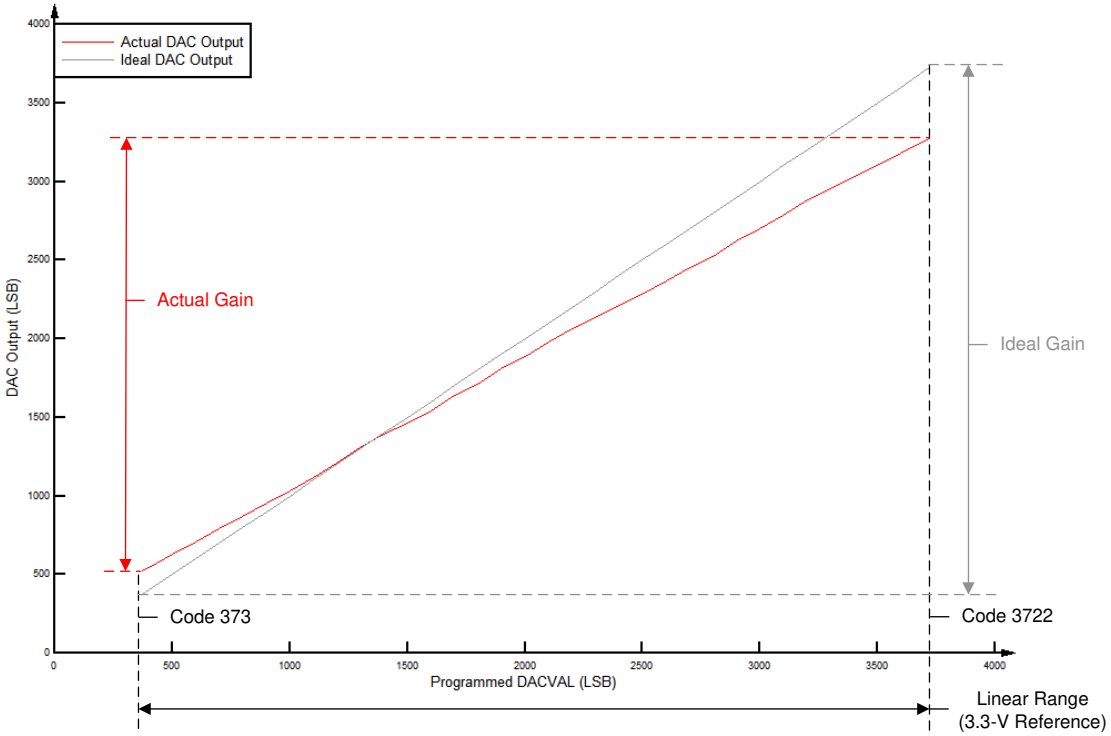

Figure 6-49. Buffered DAC Gain

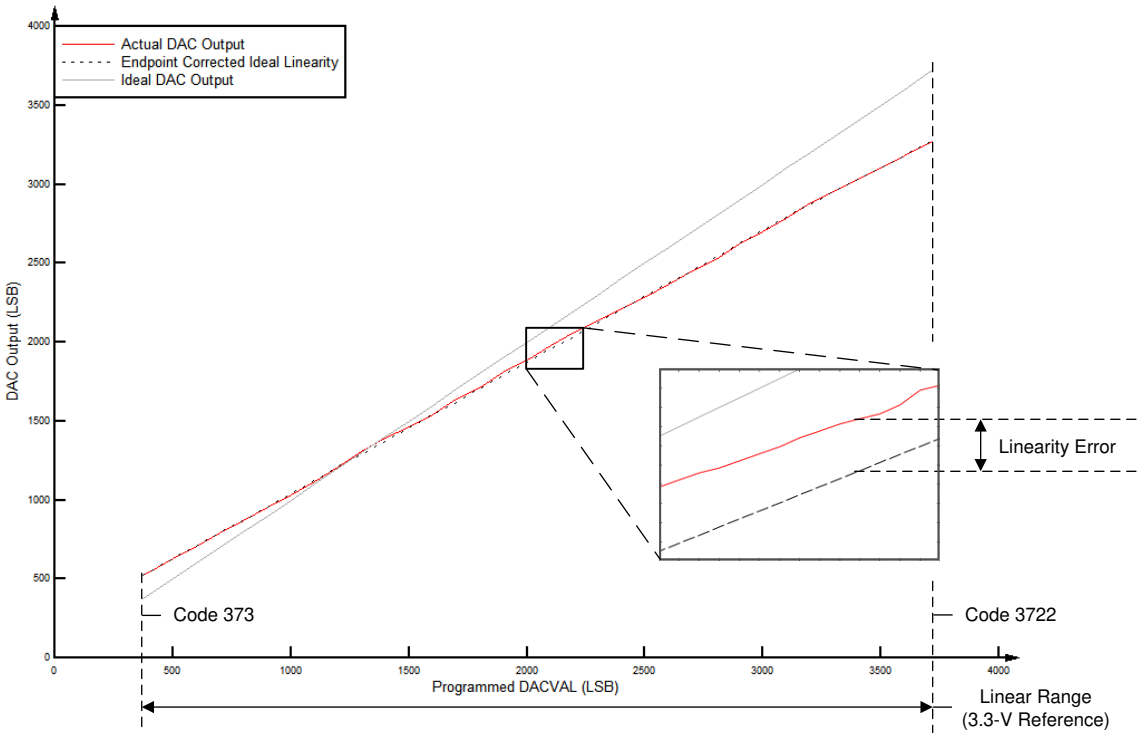

Figure 6-50. Buffered DAC Linearity

Copyright © 2026 Texas Instruments Incorporated

6.10.4.1.4 Buffered DAC Typical Characteristics Graphs

Figure 6-51 to Figure 6-56 show the typical performance for some buffered DAC parameters. Figure 6-51 shows the DNL. Figure 6-52 shows the INL. Figure 6-53 shows the glitch response (511 to 512 DACVAL) and Figure 6-54 shows the glitch response (512 to 511 DACVAL). Note that the glitch only happens at MSB transitions, with 511-to-512 and 512-to-511 transitions being the worst case. Figure 6-55 shows the 1-kΩ load transient. Figure 6-56 shows the 5-kΩ load transient.

Note

For Figure 6-51 to Figure 6-56, the following conditions apply (unless otherwise noted):

- T_A = 30°C
- VDDA = 3.3 V
- VDD = 1.2 V

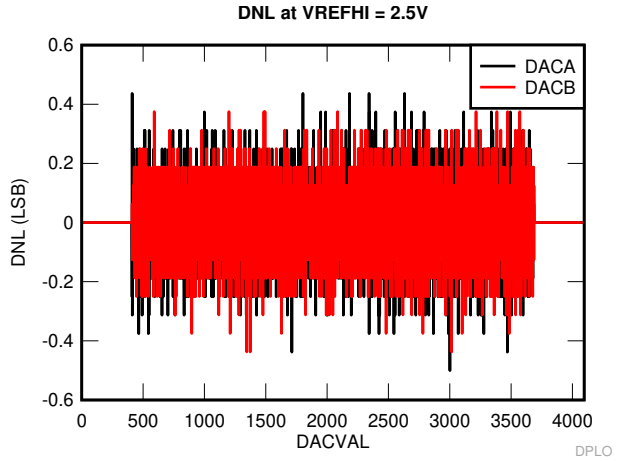

Figure 6-51. DNL

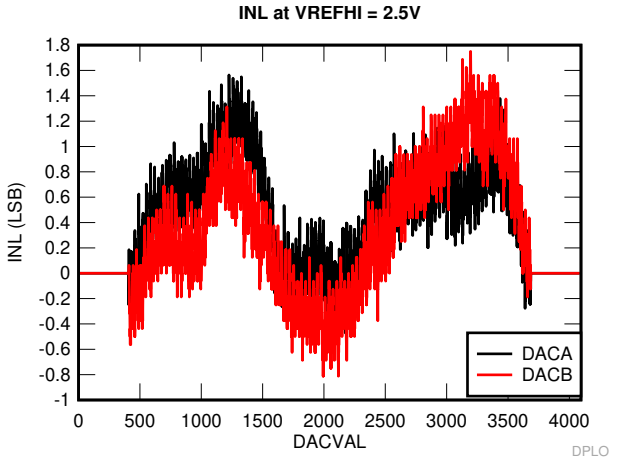

Figure 6-52. INL

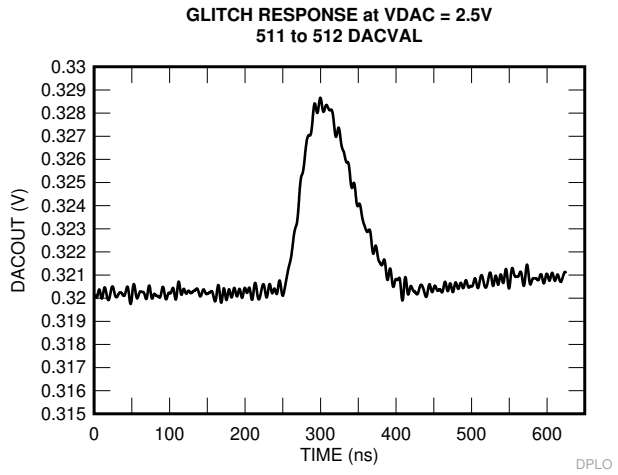

Figure 6-53. Glitch Response – 511 to 512 DACVAL

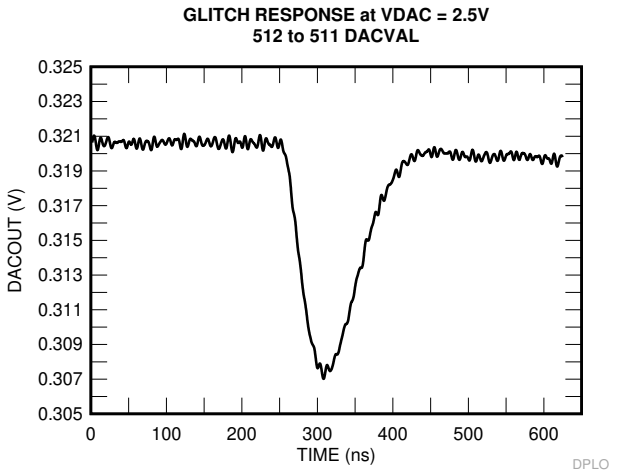

Figure 6-54. Glitch Response – 512 to 511 DACVAL

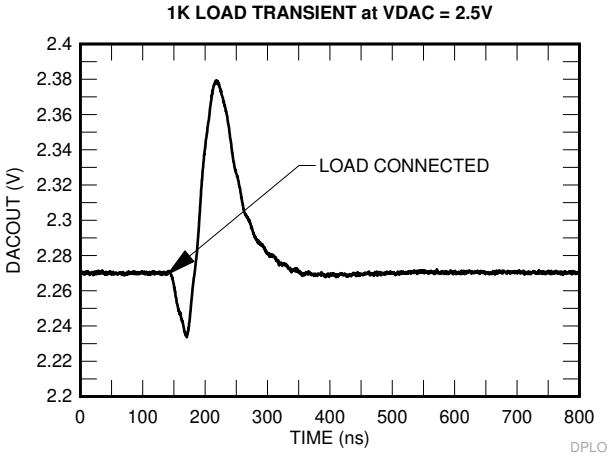

Figure 6-55. 1-kΩ Load Transient

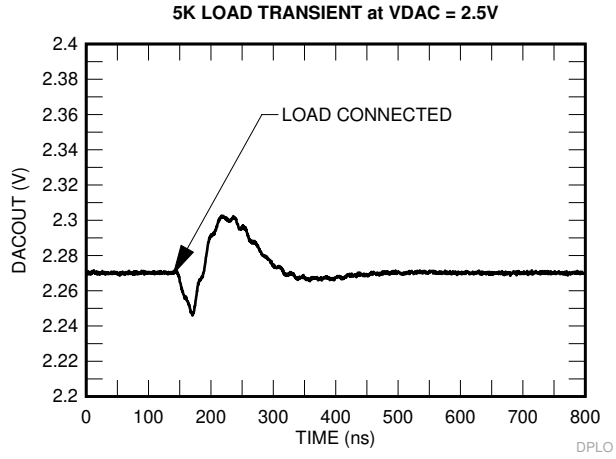

Figure 6-56. 5-kΩ Load Transient

Copyright © 2026 Texas Instruments Incorporated

6.10.5 Comparator Subsystem (CMPSS)

Each CMPSS contains two comparators, two reference 12-bit DACs, two digital filters, and one ramp generator. Comparators are denoted "H" or "L" within each module, where “H” and “L” represent high and low, respectively. Each comparator generates a digital output that indicates whether the voltage on the positive input is greater than the voltage on the negative input. The positive input of the comparator can be driven from an external pin or by the PGA . The negative input can be driven by an external pin or by the programmable reference 12-bit DAC. Each comparator output passes through a programmable digital filter that can remove spurious trip signals. An unfiltered output is also available if filtering is not required. A ramp generator circuit is optionally available to control the reference 12-bit DAC value for the high comparator in the subsystem. There are two outputs from each CMPSS module. These two outputs pass through the digital filters and crossbar before connecting to the ePWM modules or GPIO pin. Figure 6-57 shows the CMPSS connectivity.

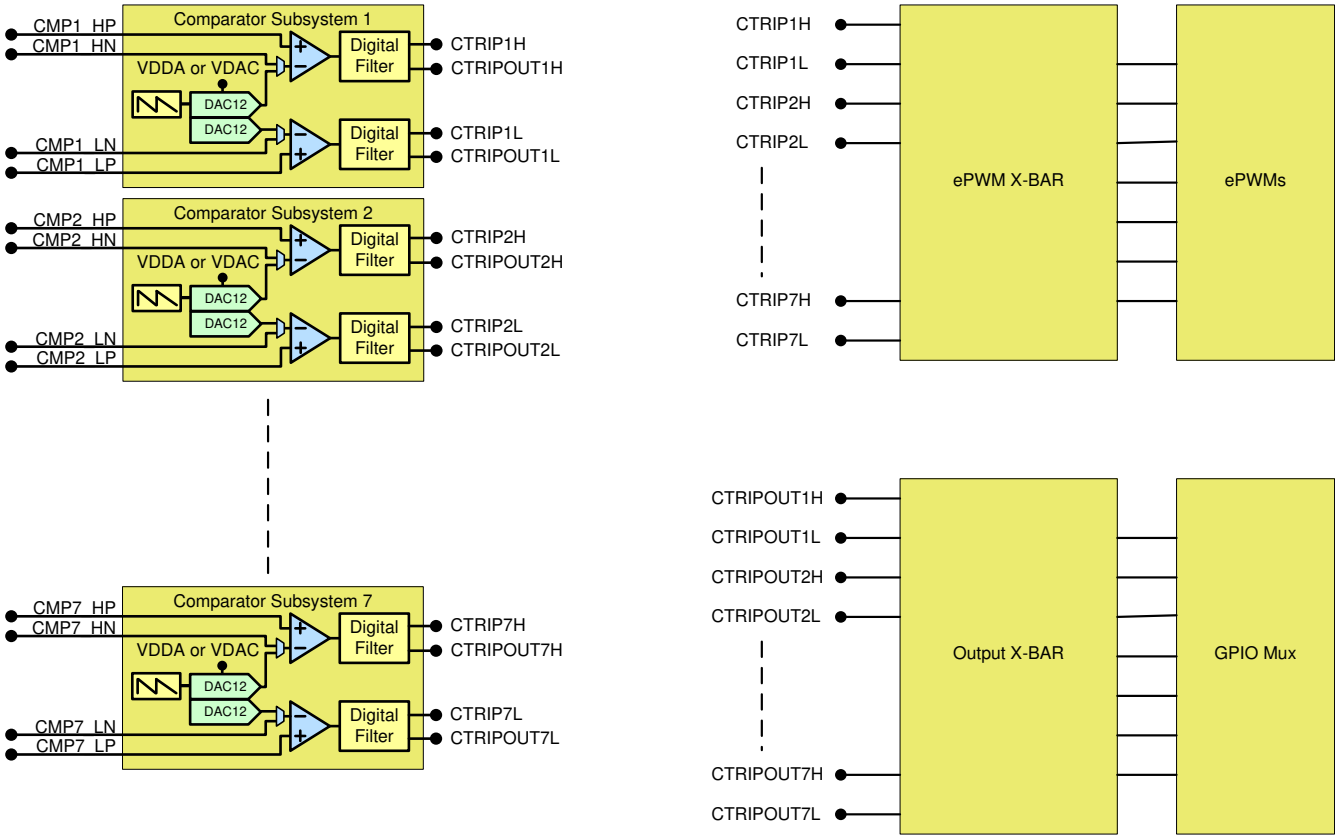

Figure 6-57. CMPSS Connectivity

Note

Not all packages have all CMPSS pins. See the *Analog Pins and Internal Connections* table.

6.10.5.1 CMPSS Electrical Data and Timing

Section 6.10.5.1.1 lists the comparator electrical characteristics. Figure 6-58 shows the CMPSS comparator input referred offset. Figure 6-59 shows the CMPSS comparator hysteresis.

6.10.5.1.1 Comparator Electrical Characteristics

over recommended operating conditions (unless otherwise noted)

PARAMETER		TEST CONDITIONS	MIN	TYP	MAX	UNIT
TPU	Power-up time				500	µs
Comparator input (CMPINxx) range			0		VDDA	V
Input referred offset error		Low common mode, inverting input set to 50 mV	–20		20	mV
Hysteresis(1)		1x		12		LSB
		2x		24		
		3x		36		
		4x		48		
Response time (delay from CMPINx input change to output on ePWM X-BAR or Output X-BAR)		Step response		21	60	ns
		Ramp response (1.65 V/µs)		26		
		Ramp response (8.25 mV/µs)		30		ns
PSRR	Power Supply Rejection Ratio	Up to 250 kHz		46		dB
CMRR	Common Mode Rejection Ratio		40			dB

(1) The CMPSS DAC is used as the reference to determine how much hysteresis to apply. Therefore, hysteresis will scale with the CMPSS DAC reference voltage. Hysteresis is available for all comparator input source configurations.

Note

The CMPSS inputs must be kept below VDDA + 0.3 V to ensure proper functional operation. If a CMPSS input exceeds this level, an internal blocking circuit isolates the internal comparator from the external pin until the external pin voltage returns below VDDA + 0.3 V. During this time, the internal comparator input is floating and can decay below VDDA within approximately 0.5 µs. After this time, the comparator could begin to output an incorrect result depending on the value of the other comparator input.

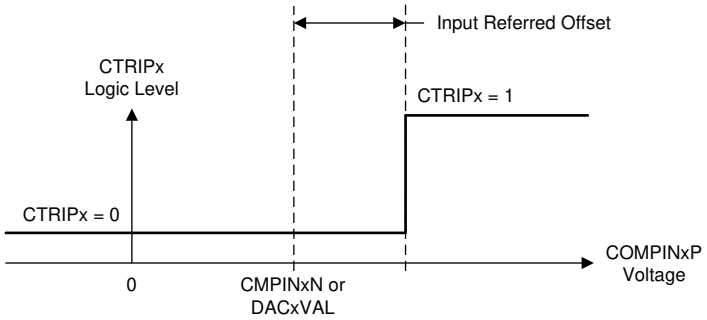

Figure 6-58. CMPSS Comparator Input Referred Offset

Copyright © 2026 Texas Instruments Incorporated

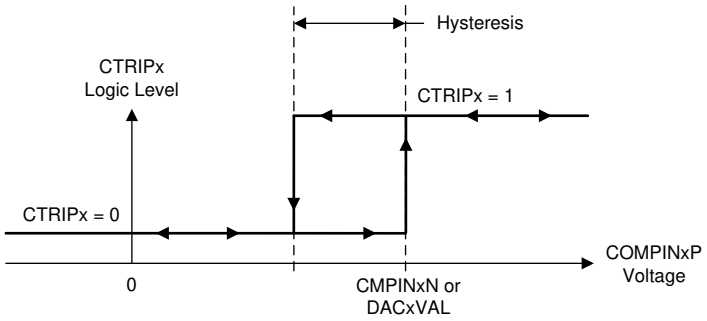

Figure 6-59. CMPSS Comparator Hysteresis

Section 6.10.5.1.2 lists the CMPSS DAC static electrical characteristics.

6.10.5.1.2 CMPSS DAC Static Electrical Characteristics

over recommended operating conditions (unless otherwise noted)

PARAMETER	TEST CONDITIONS	MIN	TYP	MAX	UNIT
CMPSS DAC output range	Internal reference	0		VDDA	V
	External reference	0		VDAC(4)	
Static offset error(1)		–25		25	mV
Static gain error(1)		–2		2	% of FSR
Static DNL	Endpoint corrected	>–1		4	LSB
Static INL	Endpoint corrected	–16		16	LSB
Settling time	Settling to 1LSB after full-scale output change			1	µs
Resolution			12		bits
CMPSS DAC output disturbance(2)	Error induced by comparator trip or CMPSS DAC code change within the same CMPSS module	–100		100	LSB
CMPSS DAC disturbance time(2)				200	ns
VDAC reference voltage	When VDAC is reference	2.4	2.5 or 3.0	VDDA	V
VDAC load(3)	When VDAC is reference	6	8	10	kΩ

(1) Includes comparator input referred errors.
(2) Disturbance error may be present on the CMPSS DAC output for a certain amount of time after a comparator trip.
(3) Per active CMPSS module.
(4) The maximum output voltage is VDDA when VDAC > VDDA.

Copyright © 2026 Texas Instruments Incorporated

6.10.5.1.3 CMPSS Illustrative Graphs

Figure 6-60 shows the CMPSS DAC static offset. Figure 6-61 shows the CMPSS DAC static gain. Figure 6-62 shows the CMPSS DAC static linearity.

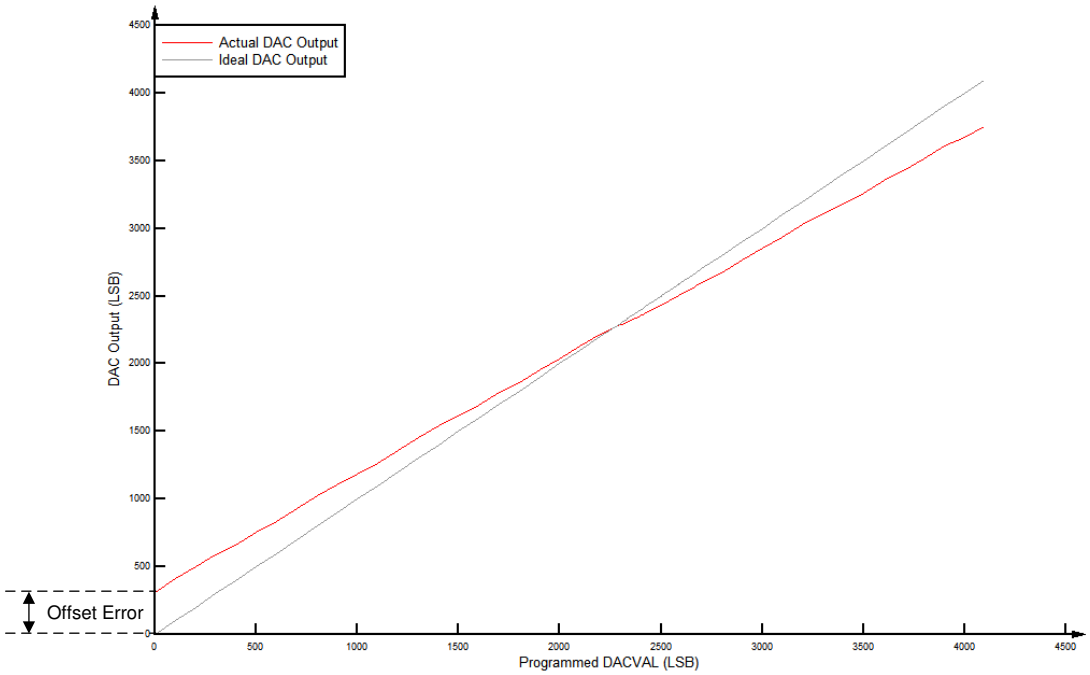

Figure 6-60. CMPSS DAC Static Offset

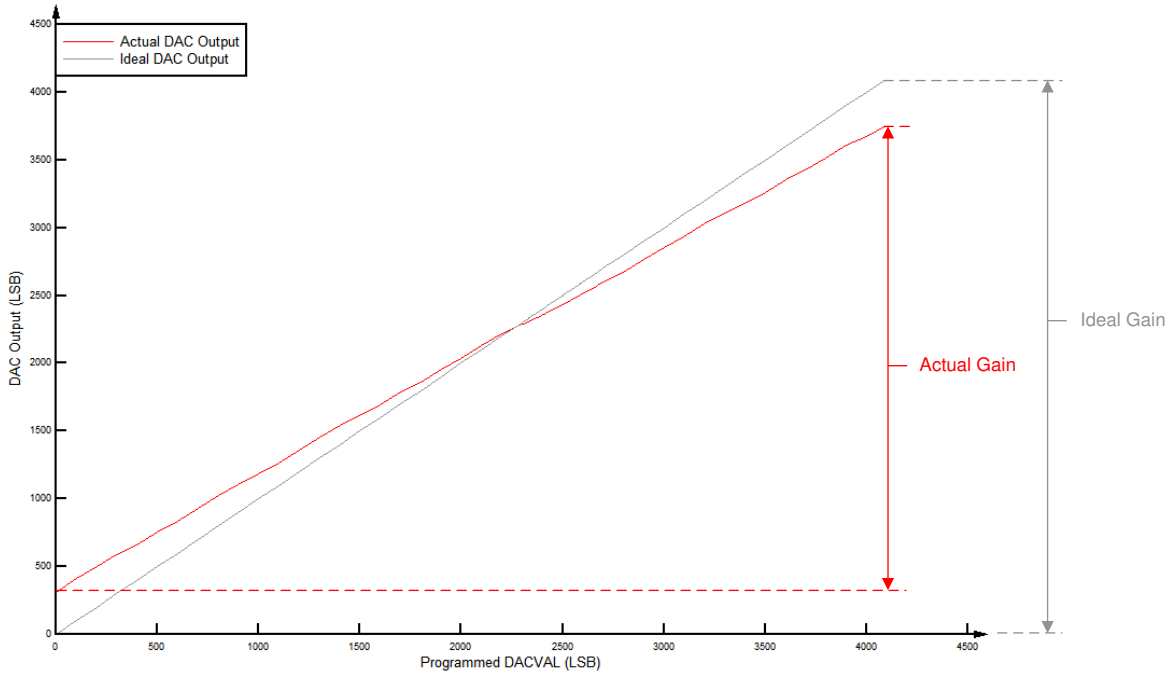

Figure 6-61. CMPSS DAC Static Gain

Copyright © 2026 Texas Instruments Incorporated

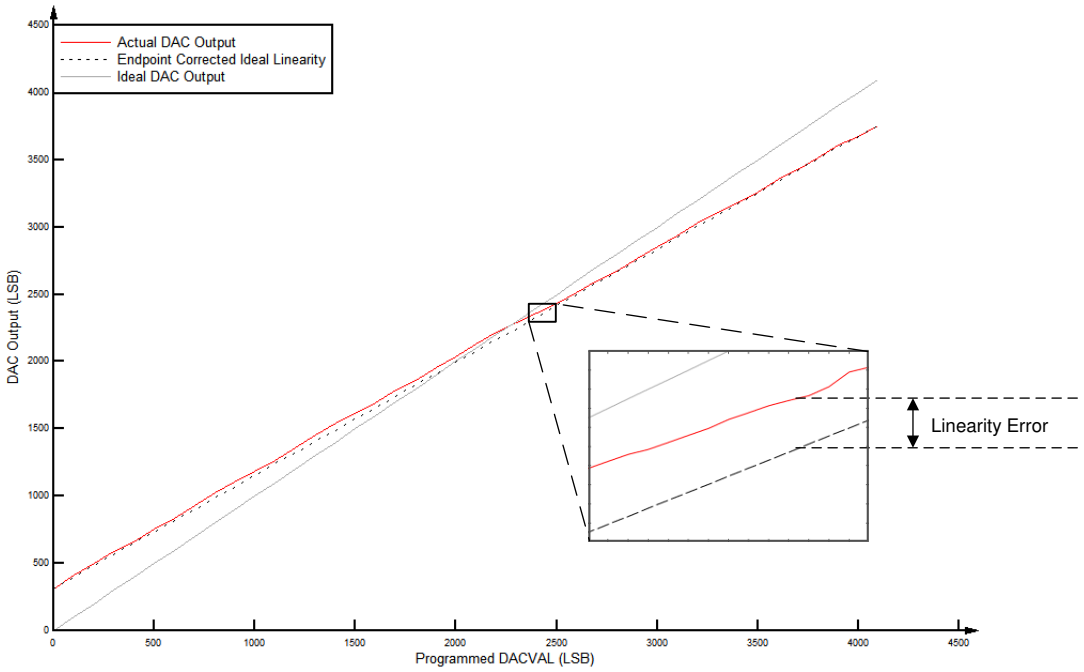

Figure 6-62. CMPSS DAC Static Linearity

6.11 Control Peripherals

6.11.1 Enhanced Capture (eCAP)

The Type 1 enhanced capture (eCAP) module is used in systems where accurate timing of external events is important.

Applications for the eCAP module include:

- Speed measurements of rotating machinery (for example, toothed sprockets sensed through Hall sensors)
- Elapsed time measurements between position sensor pulses
- Period and duty cycle measurements of pulse train signals
- Decoding current or voltage amplitude derived from duty cycle encoded current/voltage sensors

The eCAP module includes the following features:

- 4-event time-stamp registers (each 32 bits)
- Edge polarity selection for up to four sequenced time-stamp capture events
- CPU interrupt on any one of the four events
- Independent DMA trigger
- Single-shot capture of up to four event timestamps
- Continuous mode capture of timestamps in a 4-deep circular buffer
- Absolute time-stamp capture
- Difference (Delta) mode time-stamp capture
- 128:1 input multiplexer
- Event Prescaler
- When not used in capture mode, the eCAP module can be configured as a single channel PWM output.

The capture functionality of the Type-1 eCAP is enhanced from the Type-0 eCAP with the following added features:

- Event filter reset bit
  - Writing a 1 to ECCTL2[CTRFILTRESET] will clear the event filter, the modulo counter, and any pending interrupts flags. This is useful for initialization and debug.
- Modulo counter status bits
  - The modulo counter (ECCTL2[MODCTRSTS]) indicates which capture register will be loaded next. In the Type-0 eCAP, it was not possible to know the current state of modulo counter.
- DMA trigger source
  - eCAPxDMA was added as a DMA trigger. CEVT[1–4] can be configured as the source for eCAPxDMA.
- Input multiplexer
  - ECCTL0[INPUTSEL] selects one of 128 input signals.
- EALLOW protection
  - EALLOW protection was added to critical registers.

The Input X-BAR must be used to connect the device input pins to the module. The Output X-BAR must be used to connect output signals to the OUTPUTXBARx output locations. See Section 5.4.3 and Section 5.4.4.

Figure 6-63 shows the eCAP block diagram.

Copyright © 2026 Texas Instruments Incorporated

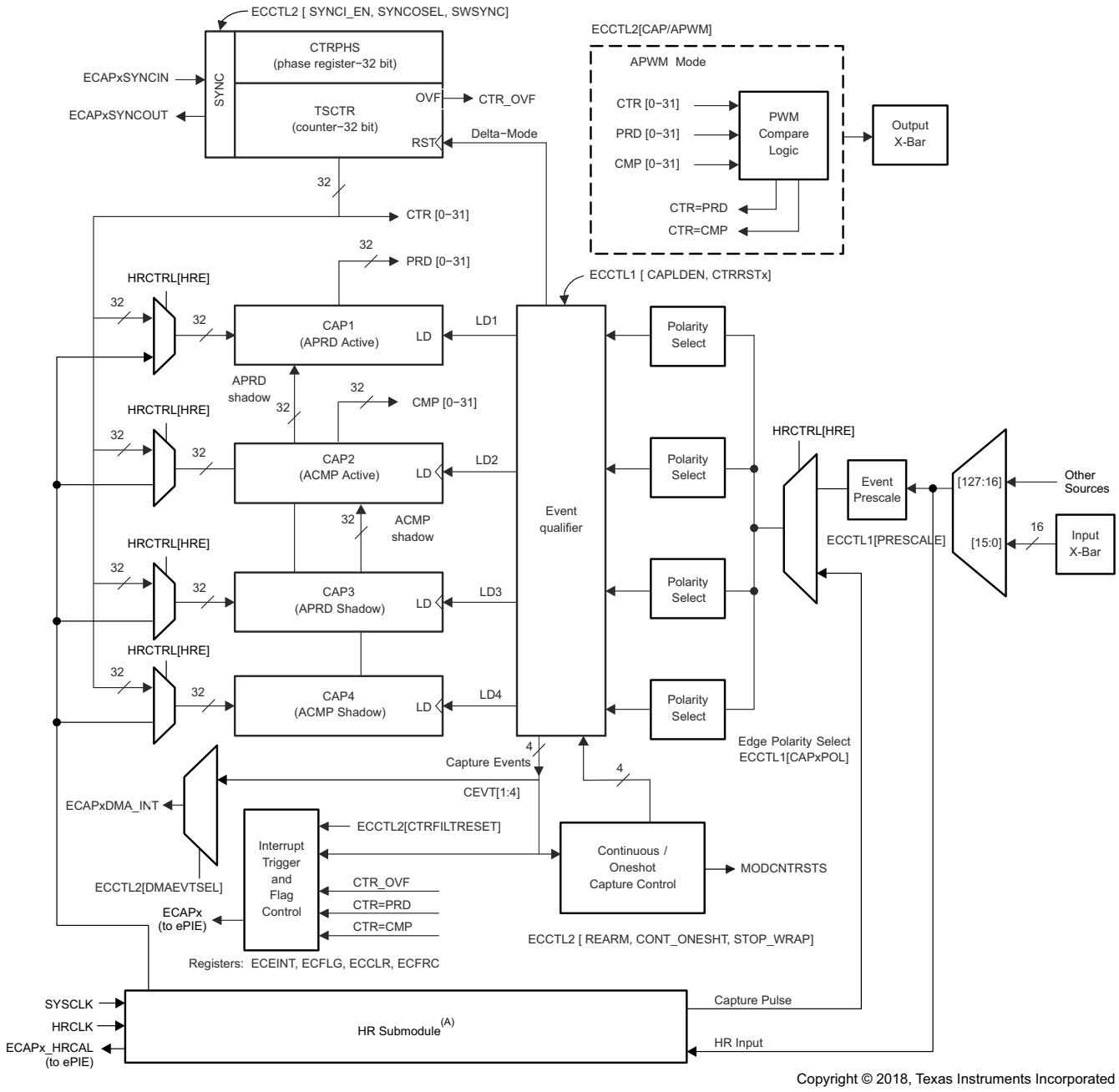

Copyright © 2018, Texas Instruments Incorporated

A. The HRCAP submodule is not available on all eCAP modules; in this case, the high-resolution muxes and hardware are not implemented.

Figure 6-63. eCAP Block Diagram

6.11.1.1 eCAP Electrical Data and Timing

Section 6.11.1.1.1 lists the eCAP timing requirements. Section 6.11.1.1.2 lists the eCAP switching characteristics.

6.11.1.1.1 eCAP Timing Requirements

			MIN	NOM	MAX	UNIT
$t_{w(CAP)}$	Capture input pulse width	Asynchronous	$2t_{c(SCO)}$			ns
		Synchronous	$2t_{c(SCO)}$			
		With input qualifier	$1t_{c(SCO)} + t_{w_(QSW)}$			

6.11.1.1.2 eCAP Switching Characteristics

over recommended operating conditions (unless otherwise noted)

PARAMETER		MIN	TYP	MAX	UNIT
$t_{w(APWM)}$	Pulse duration, APWMx output high/low	20			ns

Copyright © 2026 Texas Instruments Incorporated

6.11.2 High-Resolution Capture Submodule (HRCAP6–HRCAP7)

The device contains up to two high-resolution capture (HRCAP) submodules. The HRCAP submodule measures the difference, in time, between pulses asynchronously to the system clock. This submodule is new to the eCAP Type 1 module, and features many enhancements over the Type 0 HRCAP module.

Applications for the HRCAP include:

- Capacitive touch applications
- High-resolution period and duty-cycle measurements of pulse train cycles
- Instantaneous speed measurements
- Instantaneous frequency measurements
- Voltage measurements across an isolation boundary
- Distance/sonar measurement and scanning
- Flow measurements

The HRCAP submodule includes the following features:

- Pulse-width capture in either non-high-resolution or high-resolution modes
- Absolute mode pulse-width capture
- Continuous or "one-shot" capture
- Capture on either falling or rising edge
- Continuous mode capture of pulse widths in 4-deep buffer
- Hardware calibration logic for precision high-resolution capture
- All of the resources in this list are available on any pin using the Input X-BAR.

The HRCAP submodule includes one high-resolution capture channel in addition to a calibration block. The calibration block allows the HRCAP submodule to be continually recalibrated, at a set interval, with no “down time”. Because the HRCAP submodule now uses the same hardware as its respective eCAP, if the HRCAP is used, the corresponding eCAP will be unavailable.

Each high-resolution-capable channel has the following independent key resources.

- All hardware of the respective eCAP
- High-resolution calibration logic
- Dedicated calibration interrupt

Figure 6-64 shows the HRCAP block diagram.

Copyright © 2026 Texas Instruments Incorporated

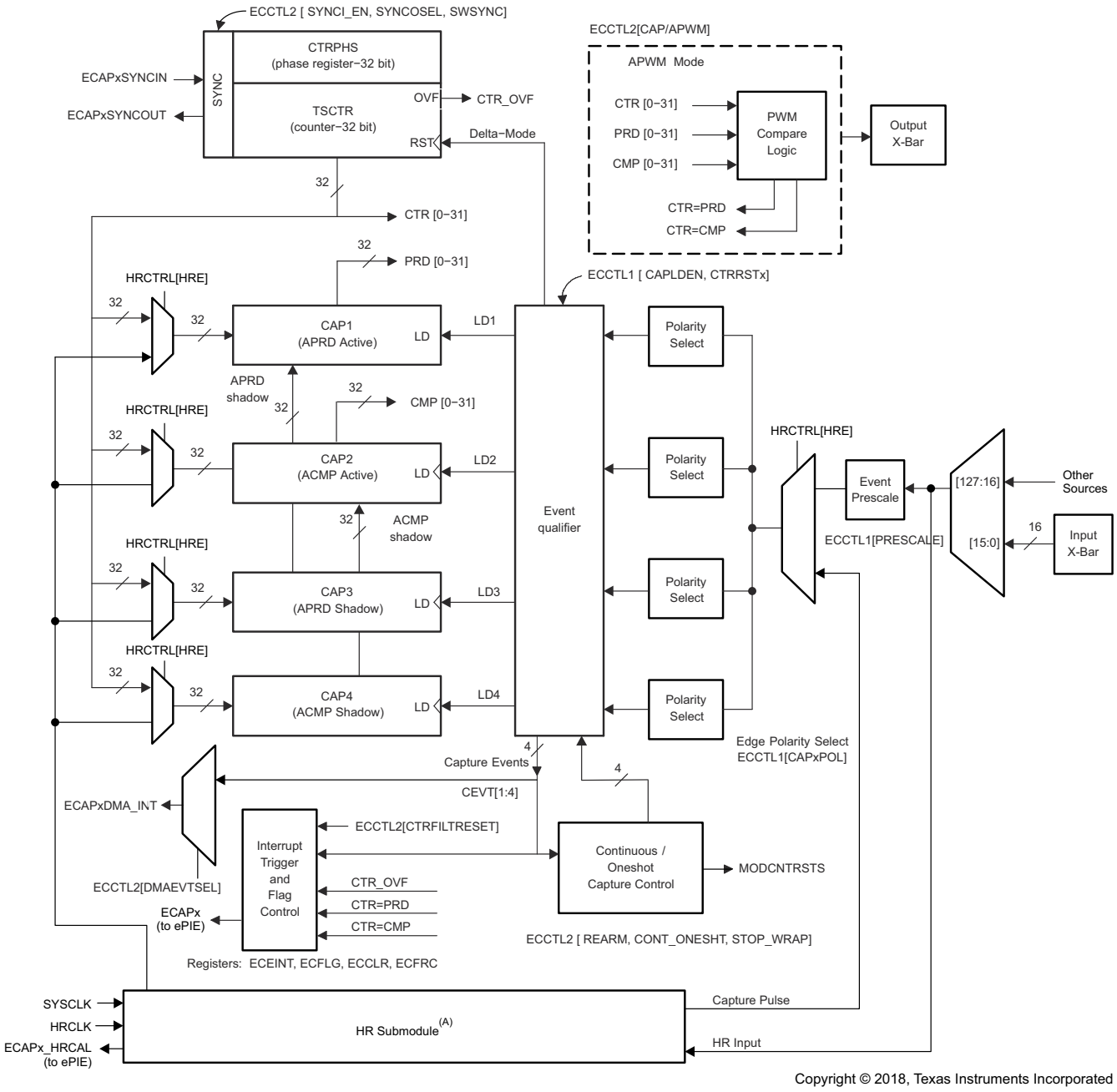

Copyright © 2018, Texas Instruments Incorporated

A. The HRCAP submodule is not available on all eCAP modules; in this case, the high-resolution muxes and hardware are not implemented.

Figure 6-64. HRCAP Block Diagram

Copyright © 2026 Texas Instruments Incorporated

6.11.2.1 HRCAP Electrical Data and Timing

Section 6.11.2.1.1 lists the HRCAP switching characteristics. Figure 6-65 shows the HRCAP accuracy precision and resolution. Figure 6-66 shows the HRCAP standard deviation characteristics.

6.11.2.1.1 HRCAP Switching Characteristics

over recommended operating conditions (unless otherwise noted)

PARAMETER	TEST CONDITIONS	MIN	TYP	MAX	UNIT
Input pulse width		110			ns
Accuracy(1) (2) (3) (4)	Measurement length ≤ 5 µs		±390	540	ps
	Measurement length > 5 µs		±450	1450	ps
Standard deviation			See Figure 6-66		
Resolution			300		ps

(1) Value obtained using an oscillator of 100 PPM, oscillator accuracy directly affects the HRCAP accuracy.
(2) Measurement is completed using rising-rising or falling-falling edges
(3) Opposite polarity edges will have an additional inaccuracy due to the difference between V_{IH} and V_{IL}. This effect is dependent on the signal's slew rate.
(4) Accuracy only applies to time-converted measurements.

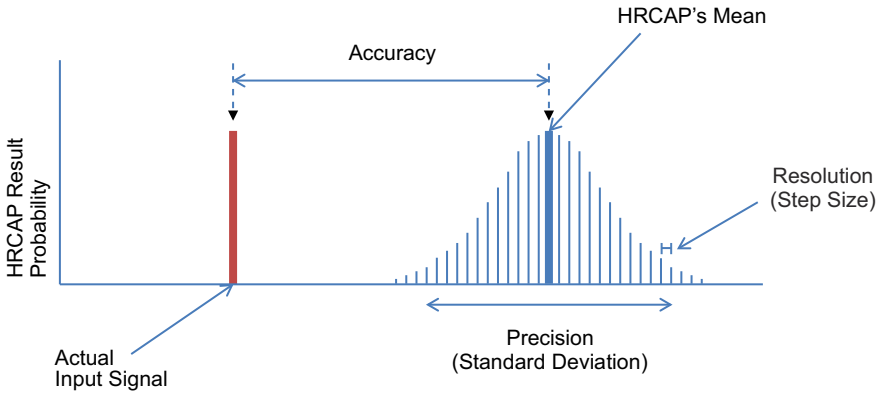

A. The HRCAP has some variation in performance, this results in a probability distribution which is described using the following terms:
- Accuracy: The time difference between the input signal and the mean of the HRCAP's distribution.
- Precision: The width of the HRCAP's distribution, this is given as a standard deviation.
- Resolution: The minimum measurable increment.

Figure 6-65. HRCAP Accuracy Precision and Resolution

Copyright © 2026 Texas Instruments Incorporated

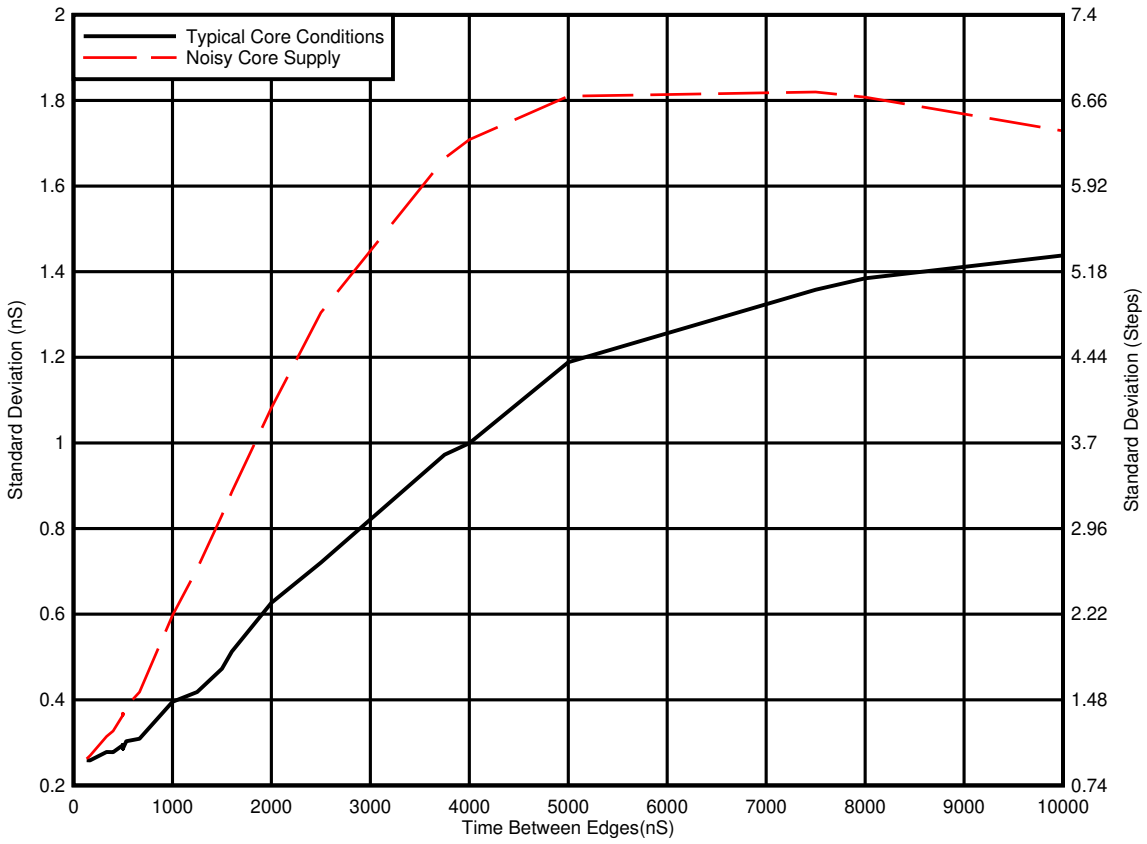

A. Typical core conditions: All peripheral clocks are enabled.

B. Noisy core supply: All core clocks are enabled and disabled with a regular period during the measurement. This resulted in the 1.2-V rail experiencing a 18.5-mA swing during the measurement.

C. Fluctuations in current and voltage on the 1.2-V rail cause the standard deviation of the HRCAP to rise. Care should be taken to ensure that the 1.2-V supply is clean, and that noisy internal events, such as enabling and disabling clock trees, have been minimized while using the HRCAP.

Figure 6-66. HRCAP Standard Deviation Characteristics

Copyright © 2026 Texas Instruments Incorporated

6.11.3 Enhanced Pulse Width Modulator (ePWM)

The ePWM peripheral is a key element in controlling many of the power electronic systems found in both commercial and industrial equipment. The ePWM type-4 module generates complex pulse width waveforms with minimal CPU overhead. Some of the highlights of the ePWM type-4 module include complex waveform generation, dead-band generation, a flexible synchronization scheme, advanced trip-zone functionality, and global register reload capabilities.

Figure 6-67 shows the signal interconnections with the ePWM. Figure 6-68 shows the ePWM trip input connectivity.

Copyright © 2026 Texas Instruments Incorporated

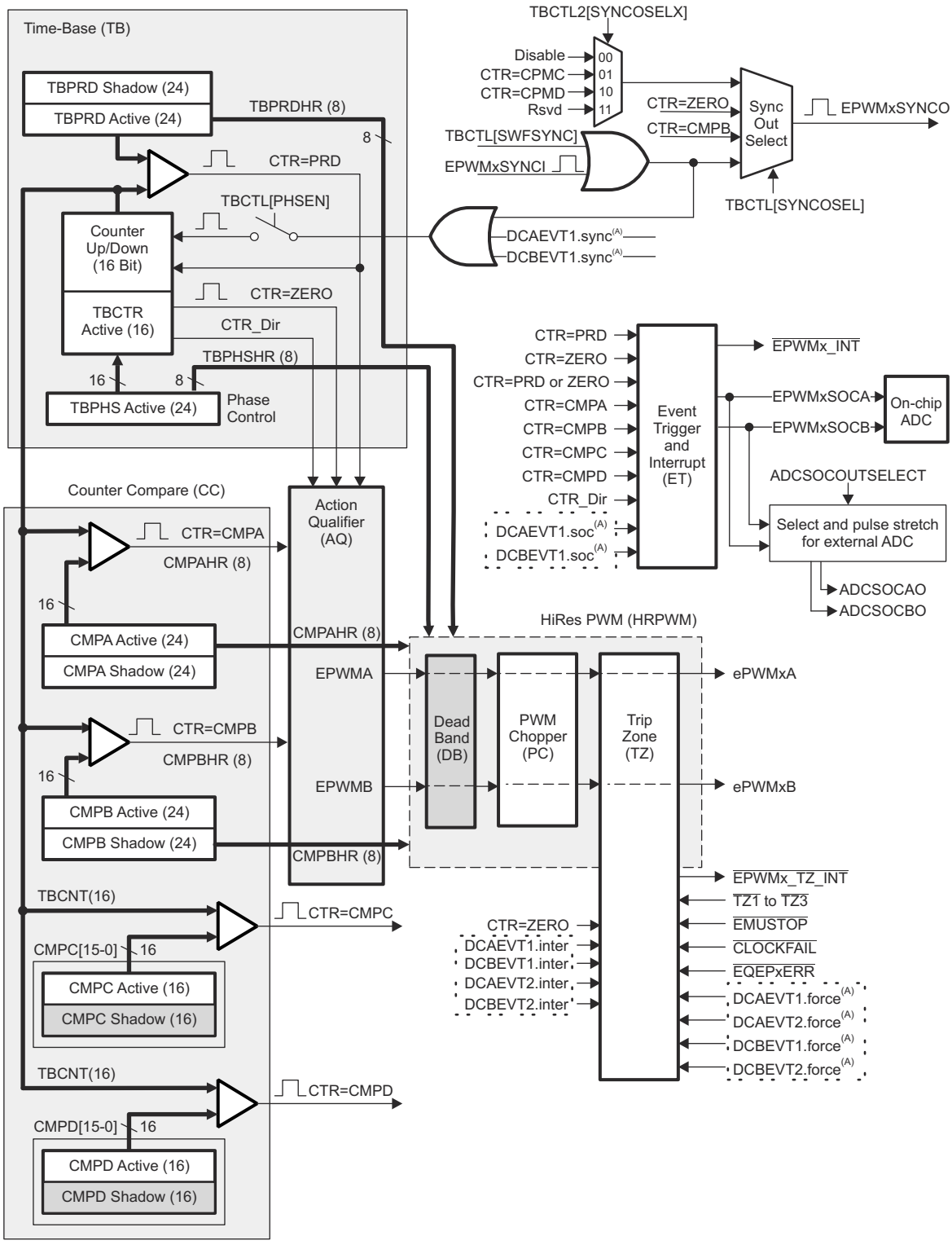

A. These events are generated by the ePWM digital compare (DC) submodule based on the levels of the TRIPIN inputs.

Figure 6-67. ePWM Submodules and Critical Internal Signal Interconnects

Copyright © 2026 Texas Instruments Incorporated

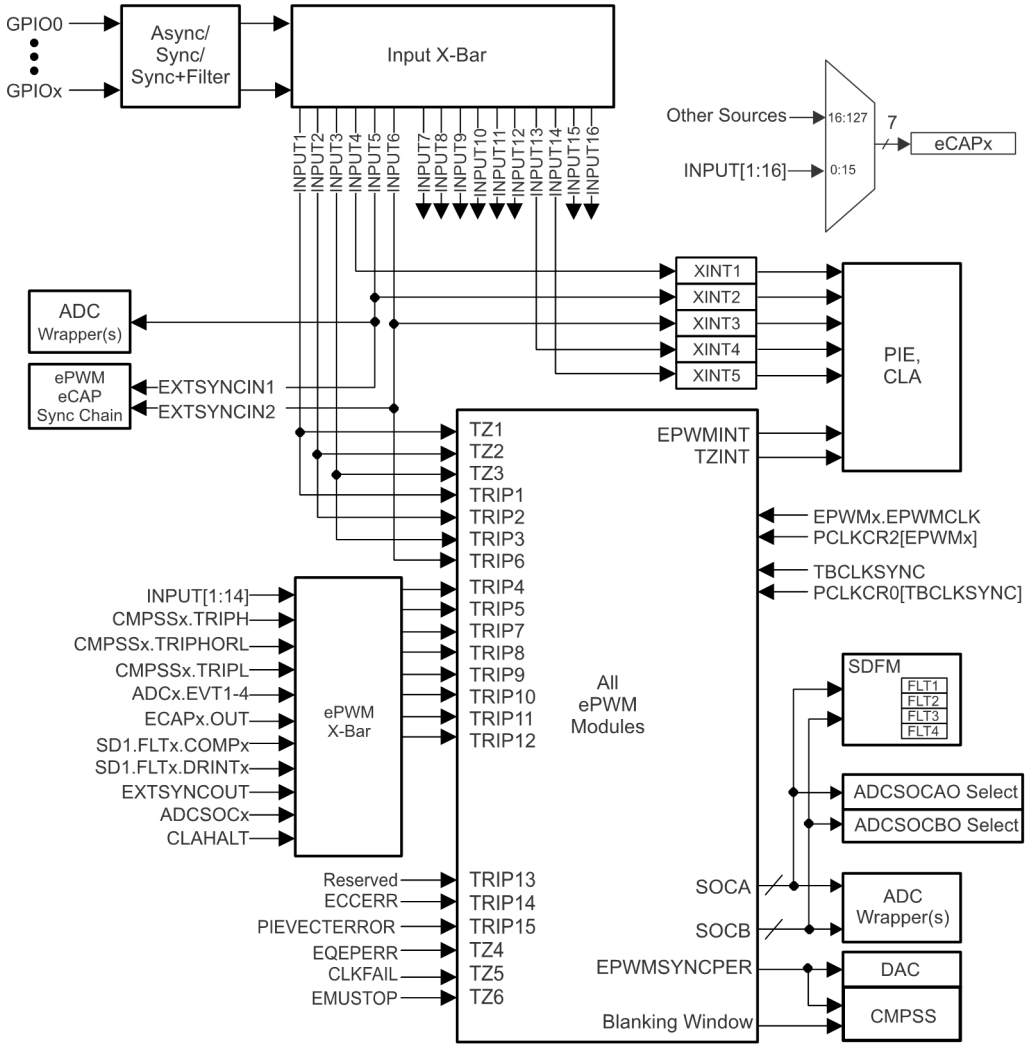

Figure 6-68. ePWM Trip Input Connectivity

6.11.3.1 Control Peripherals Synchronization

The ePWM and eCAP Synchronization Chain allows synchronization between multiple modules for the system. Figure 6-69 shows the Synchronization Chain Architecture.

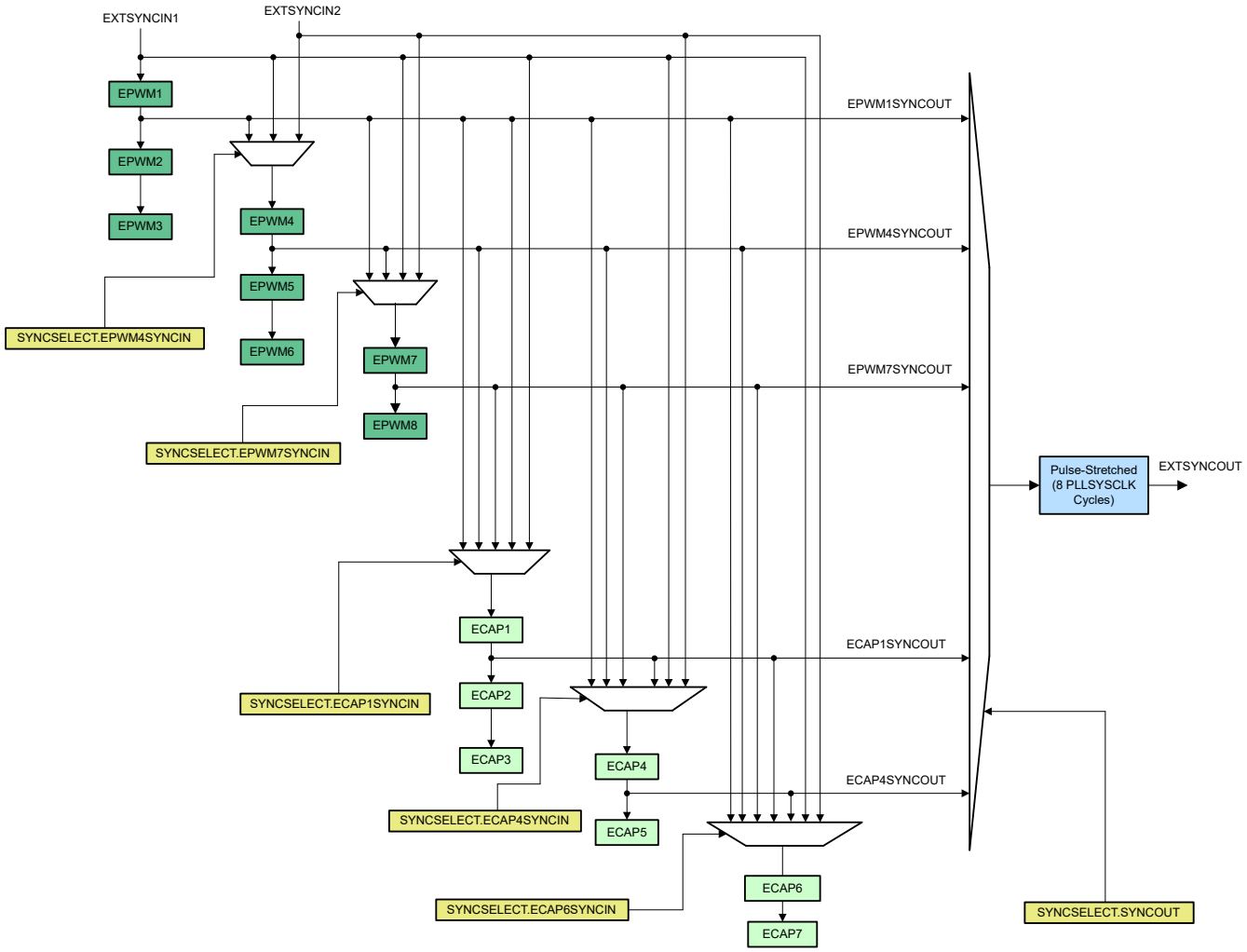

Figure 6-69. Synchronization Chain Architecture

Copyright © 2026 Texas Instruments Incorporated

6.11.3.2 ePWM Electrical Data and Timing

Section 6.11.3.2.1 lists the ePWM timing requirements and Section 6.11.3.2.2 lists the ePWM switching characteristics.

6.11.3.2.1 ePWM Timing Requirements

			MIN	MAX	UNIT
$t_{w(SYNCIN)}$	Sync input pulse width	Asynchronous	$2t_{c(EPWMCLK)}$		cycles
		Synchronous	$2t_{c(EPWMCLK)}$		
		With input qualifier(1)	$1t_{c(EPWMCLK)} + t_{w(IQSW)}$		

(1) For an explanation of the input qualifier parameters, see Section 6.9.6.2.1.

6.11.3.2.2 ePWM Switching Characteristics

over recommended operating conditions (unless otherwise noted)

PARAMETER		MIN	MAX	UNIT
$t_{w(PWM)}$	Pulse duration, PWMx output high/low	20		ns
$t_{w(SYNCOUT)}$	Sync output pulse width	$8t_{c(SYSCLK)}$		cycles
$t_{d(TZ-PWM)}$	Delay time, trip input active to PWM forced high Delay time, trip input active to PWM forced low Delay time, trip input active to PWM Hi-Z		25	ns

6.11.3.2.3 Trip-Zone Input Timing

Section 6.11.3.2.3.1 lists the trip-zone input timing requirements. Figure 6-70 shows the PWM Hi-Z characteristics.

6.11.3.2.3.1 Trip-Zone Input Timing Requirements

			MIN	MAX	UNIT
$t_{w(TZ)}$	Pulse duration, $\overline{TZ}x$ input low	Asynchronous	$1t_{c(EPWMCLK)}$		cycles
		Synchronous	$2t_{c(EPWMCLK)}$		
		With input qualifier(1)	$1t_{c(EPWMCLK)} + t_{w(IQSW)}$		

(1) For an explanation of the input qualifier parameters, see Section 6.9.6.2.1.

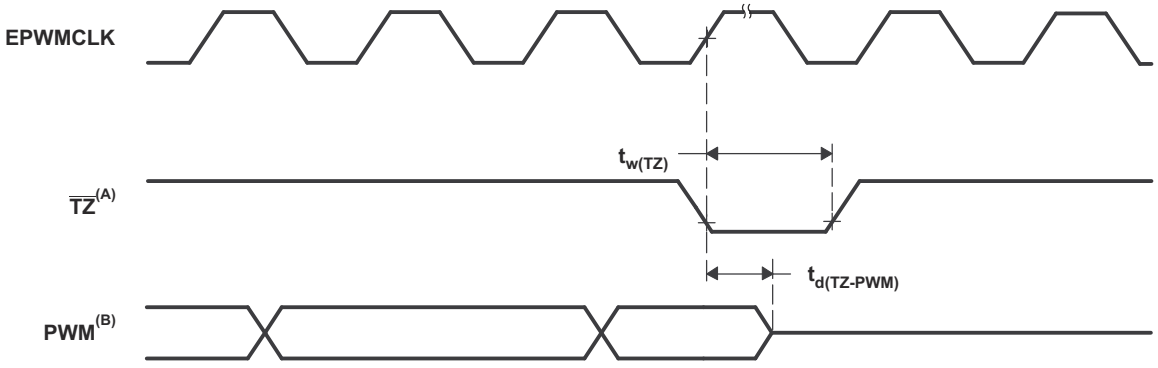

A. $\overline{TZ}$: $\overline{TZ1}$, $\overline{TZ2}$, $\overline{TZ3}$, TRIP1–TRIP12

B. PWM refers to all the PWM pins in the device. The state of the PWM pins after $\overline{TZ}$ is taken high depends on the PWM recovery software.

Figure 6-70. PWM Hi-Z Characteristics

Copyright © 2026 Texas Instruments Incorporated

6.11.3.3 External ADC Start-of-Conversion Electrical Data and Timing

Section 6.11.3.3.1 lists the external ADC start-of-conversion switching characteristics. Figure 6-71 shows the $\overline{\text{ADCSOCAO}}$ or $\overline{\text{ADCSOCBO}}$ timing.

6.11.3.3.1 External ADC Start-of-Conversion Switching Characteristics

over recommended operating conditions (unless otherwise noted)

PARAMETER		MIN	MAX	UNIT
$t_{w(ADCSOCL)}$	Pulse duration, $\overline{\text{ADCSOCxO}}$ low	$32t_{c(SYSCLK)}$		cycles

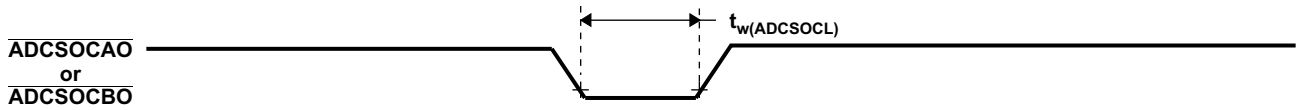

Figure 6-71. $\overline{\text{ADCSOCAO}}$ or $\overline{\text{ADCSOCBO}}$ Timing

Copyright © 2026 Texas Instruments Incorporated

6.11.4 High-Resolution Pulse Width Modulator (HRPWM)

The HRPWM combines multiple delay lines in a single module and a simplified calibration system by using a dedicated calibration delay line. For each ePWM module, there are two HR outputs:

- HR Duty and Deadband control on Channel A
- HR Duty and Deadband control on Channel B

The HRPWM module offers PWM resolution (time granularity) that is significantly better than what can be achieved using conventionally derived digital PWM methods. The key points for the HRPWM module are:

- Significantly extends the time resolution capabilities of conventionally derived digital PWM
- This capability can be used in both single edge (duty cycle and phase-shift control) as well as dual-edge control for frequency/period modulation.
- Finer time granularity control or edge positioning is controlled through extensions to the Compare A, B, phase, period, and deadband registers of the ePWM module.

Note

The minimum HRPWMCLK frequency allowed for HRPWM is 60 MHz.

6.11.4.1 HRPWM Electrical Data and Timing

Section 6.11.4.1.1 lists the high-resolution PWM switching characteristics.

6.11.4.1.1 High-Resolution PWM Characteristics

PARAMETER	MIN	TYP	MAX	UNIT
Micro Edge Positioning (MEP) step size[1]		150	310	ps

(1) The MEP step size will be largest at high temperature and minimum voltage on VDD. MEP step size will increase with higher temperature and lower voltage and decrease with lower temperature and higher voltage.
Applications that use the HRPWM feature should use MEP Scale Factor Optimizer (SFO) estimation software functions. See the TI software libraries for details of using SFO function in end applications. SFO functions help to estimate the number of MEP steps per SYSCLK period dynamically while the HRPWM is in operation.

Copyright © 2026 Texas Instruments Incorporated

6.11.5 Enhanced Quadrature Encoder Pulse (eQEP)

The Type-1 eQEP peripheral contains the following major functional units (see Figure 6-72):

- Programmable input qualification for each pin (part of the GPIO MUX)
- Quadrature decoder unit (QDU)
- Position counter and control unit for position measurement (PCCU)
- Quadrature edge-capture unit for low-speed measurement (QCAP)
- Unit time base for speed/frequency measurement (UTIME)
- Watchdog timer for detecting stalls (QWDOG)
- Quadrature Mode Adapter (QMA)

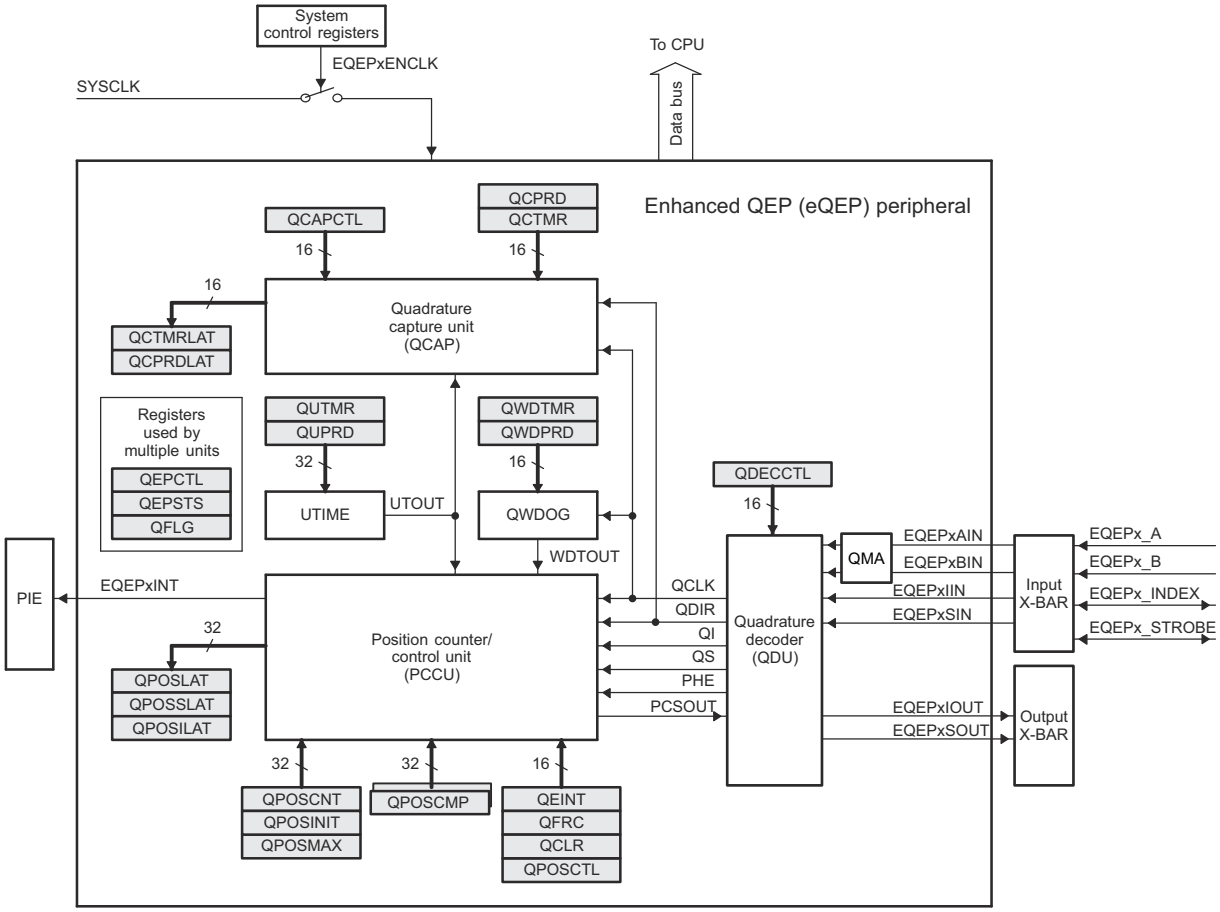

Figure 6-72. eQEP Block Diagram

Copyright © 2026 Texas Instruments Incorporated

6.11.5.1 eQEP Electrical Data and Timing

Section 6.11.5.1.1 lists the eQEP timing requirements and \Section 6.11.5.1.2 lists the eQEP switching characteristics.

6.11.5.1.1 eQEP Timing Requirements

			MIN	MAX	UNIT
$t_{w(QEPP)}$	QEP input period	Asynchronous(2)/Synchronous	$2t_{c(SYSCLK)}$		cycles
		With input qualifier(1)	$2[1t_{c(SYSCLK)} + t_{w(IQSW)}]$		
$t_{w(INDEXH)}$	QEP Index Input High time	Asynchronous(2)/Synchronous	$2t_{c(SYSCLK)}$		cycles
		With input qualifier(1)	$2t_{c(SYSCLK)} + t_{w(IQSW)}$		
$t_{w(INDEXL)}$	QEP Index Input Low time	Asynchronous(2)/Synchronous	$2t_{c(SYSCLK)}$		cycles
		With input qualifier(1)	$2t_{c(SYSCLK)} + t_{w(IQSW)}$		
$t_{w(STROBH)}$	QEP Strobe High time	Asynchronous(2)/Synchronous	$2t_{c(SYSCLK)}$		cycles
		With input qualifier(1)	$2t_{c(SYSCLK)} + t_{w(IQSW)}$		
$t_{w(STROBL)}$	QEP Strobe Input Low time	Asynchronous(2)/Synchronous	$2t_{c(SYSCLK)}$		cycles
		With input qualifier(1)	$2t_{c(SYSCLK)} + t_{w(IQSW)}$		

(1) For an explanation of the input qualifier parameters, see Section 6.9.6.2.1.
(2) See the *TMS320F28004x Real-Time MCUs Silicon Errata* for limitations in the asynchronous mode.

6.11.5.1.2 eQEP Switching Characteristics

over recommended operating conditions (unless otherwise noted)

PARAMETER		MIN	MAX	UNIT
$t_{d(CNTR)xin}$	Delay time, external clock to counter increment		$5t_{c(SYSCLK)}$	cycles
$t_{d(PCS-OUT)QEP}$	Delay time, QEP input edge to position compare sync output		$7t_{c(SYSCLK)}$	cycles

Copyright © 2026 Texas Instruments Incorporated

6.11.6 Sigma-Delta Filter Module (SDFM)

The SDFM is a 4-channel digital filter designed specifically for current measurement and resolver position decoding in motor control applications. Each channel can receive an independent sigma-delta (ΣΔ) modulated bit stream. The bit streams are processed by four individually programmable digital decimation filters. The filter set includes a fast comparator for immediate digital threshold comparisons for overcurrent and undercurrent monitoring.

The SDFM features include:

- 8 external pins per SDFM module
  - 4 sigma-delta data input pins per SDFM module (SDx_D1-4)
  - 4 sigma-delta clock input pins per SDFM module (SDx_C1-4)
- 4 different configurable modulator clock modes:
  - Mode 0: Modulator clock rate equals modulator data rate
  - Mode 1: Modulator clock rate running at half the modulator data rate
  - Mode 2: Modulator data is Manchester encoded. Modulator clock not required.
  - Mode 3: Modulator clock rate is double that of modulator data rate
- 4 independent configurable secondary filter (comparator) units per SDFM module:
  - 4 different filter type selection (Sinc1/Sinc2/Sincfast/Sinc3) options available
  - Ability to detect over-value, under-value, and zero-crossing conditions
  - OSR value for comparator filter unit (COSR) programmable from 1 to 32
- 4 independent configurable primary filter (data filter) units per SDFM module:
  - 4 different filter type selection (Sinc1/Sinc2/Sincfast/Sinc3) options available
  - OSR value for data filter unit (DOSR) programmable from 1 to 256
  - Ability to enable individual filter modules
  - Ability to synchronize all the 4 independent filters of an SDFM module using Master Filter Enable (MFE) bit or using PWM signals
- Data filter unit has programmable FIFO to reduce interrupt overhead. FIFO has the following features:
  - Primary filter (data filter) has 16 deep × 32-bit FIFO
  - FIFO can interrupt CPU after programmable number of data ready events
  - FIFO Wait-for-Sync feature: Ability to ignore data ready events until PWM synchronization signal (SDSYNC) is received. Once SDSYNC event is received, FIFO is populated on every data ready event
  - Data filter output can be represented in either 16 bits or 32 bits
- PWMx.SOCA/SOCB can be configured to serve as SDSYNC source on per data filter channel basis
- PWMs can be used to generate a modulator clock for sigma delta modulators

Note

Care should be taken to avoid noise on the SDx_Cy input. If the minimum pulse width requirements are not met (for example, through a noise glitch), then the SDFM results could become undefined.

Figure 6-73 shows the SDFM block diagram.

Copyright © 2026 Texas Instruments Incorporated

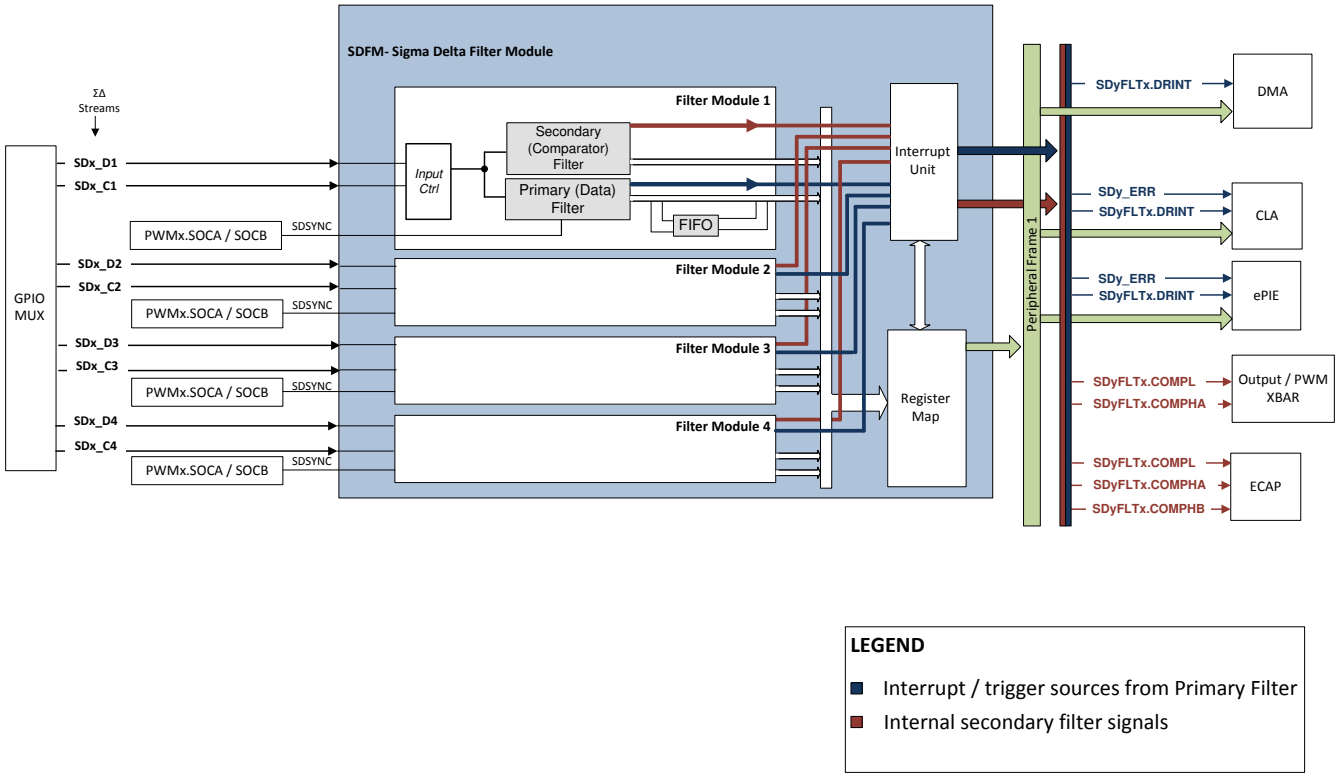

Figure 6-73. SDFM Block Diagram

6.11.6.1 SDFM Electrical Data and Timing

SDFM operation with asynchronous GPIO is defined by setting GPyQSELn = 0b11. Section 6.11.6.1.1 lists the SDFM timing requirements when using the asynchronous GPIO (ASYNC) option. Figure 6-74, Figure 6-75, Figure 6-76, and Figure 6-77 show the SDFM timing diagrams.

6.11.6.1.1 SDFM Timing Requirements When Using Asynchronous GPIO (ASYNC) Option

		MIN	MAX	UNIT
Mode 0				
$t_{c(SDC)M0}$	Cycle time, SDx_Cy	40	256 * SYSCLK period	ns
$t_{w(SDCH)M0}$	Pulse duration, SDx_Cy high	10	$t_{c(SDC)M0}$ – 10	ns
$t_{su(SDDV-SDCH)M0}$	Setup time, SDx_Dy valid before SDx_Cy goes high	5		ns
$t_{h(SDCH-SDD)M0}$	Hold time, SDx_Dy wait after SDx_Cy goes high	5		ns
Mode 1				
$t_{c(SDC)M1}$	Cycle time, SDx_Cy	80	256 * SYSCLK period	ns
$t_{w(SDCH)M1}$	Pulse duration, SDx_Cy high	10	$t_{c(SDC)M1}$ – 10	ns
$t_{su(SDDV-SDCL)M1}$	Setup time, SDx_Dy valid before SDx_Cy goes low	5		ns
$t_{su(SDDV-SDCH)M1}$	Setup time, SDx_Dy valid before SDx_Cy goes high	5		ns
$t_{h(SDCL-SDD)M1}$	Hold time, SDx_Dy wait after SDx_Cy goes low	5		ns
$t_{h(SDCH-SDD)M1}$	Hold time, SDx_Dy wait after SDx_Cy goes high	5		ns
Mode 2				
$t_{c(SDD)M2}$	Cycle time, SDx_Dy	8 * $t_{c(SYSCLK)}$	20 * $t_{c(SYSCLK)}$	ns
$t_{w(SDDH)M2}$	Pulse duration, SDx_Dy high	10		ns
$t_{w(SDD_LONG_KEEPOUT)M2}$	SDx_Dy long pulse duration keepout, where the long pulse must not fall within the MIN or MAX values listed. Long pulse is defined as the high or low pulse which is the full width of the Manchester bit-clock period. This requirement must be satisfied for any integer between 8 and 20.	(N * $t_{c(SYSCLK)}$) – 0.5	(N * $t_{c(SYSCLK)}$) + 0.5	ns
$t_{w(SDD_SHORT)M2}$	SDx_Dy Short pulse duration for a high or low pulse (SDD_SHORT_H or SDD_SHORT_L). Short pulse is defined as the high or low pulse which is half the width of the Manchester bit-clock period.	$t_{w(SDD_LONG)}$ / 2 – $t_{c(SYSCLK)}$	$t_{w(SDD_LONG)}$ / 2 + $t_{c(SYSCLK)}$	ns
$t_{w(SDD_LONG_DUTY)M2}$	SDx_Dy Long pulse variation (SDD_LONG_H – SDD_LONG_L)	– $t_{c(SYSCLK)}$	$t_{c(SYSCLK)}$	ns
$t_{w(SDD_SHORT_DUTY)M2}$	SDx_Dy Short pulse variation (SDD_SHORT_H – SDD_SHORT_L)	– $t_{c(SYSCLK)}$	$t_{c(SYSCLK)}$	ns
Mode 3				
$t_{c(SDC)M3}$	Cycle time, SDx_Cy	40	256 * SYSCLK period	ns
$t_{w(SDCH)M3}$	Pulse duration, SDx_Cy high	10	$t_{c(SDC)M3}$ – 5	ns
$t_{su(SDDV-SDCH)M3}$	Setup time, SDx_Dy valid before SDx_Cy goes high	5		ns
$t_{h(SDCH-SDD)M3}$	Hold time, SDx_Dy wait after SDx_Cy goes high	5		ns

Copyright © 2026 Texas Instruments Incorporated

6.11.6.1.2 SDFM Timing Diagram

WARNING

The SDFM clock inputs (SDx_Cy pins) directly clock the SDFM module when there is no GPIO input synchronization. Any glitches or ringing noise on these inputs can corrupt the SDFM module operation. Special precautions should be taken on these signals to ensure a clean and noise-free signal that meets SDFM timing requirements. Precautions such as series termination for ringing due to any impedance mismatch of the clock driver and spacing of traces from other noisy signals are recommended.

WARNING

Mode 2 (Manchester Mode) is not recommended for new applications. See the "SDFM: Manchester Mode (Mode 2) Does Not Produce Correct Filter Results Under Several Conditions" advisory in the *TMS320F28004x Real-Time MCUs Silicon Errata*.

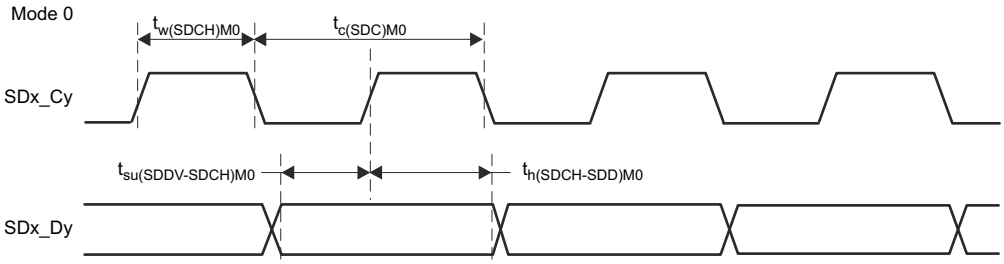

Figure 6-74. SDFM Timing Diagram – Mode 0

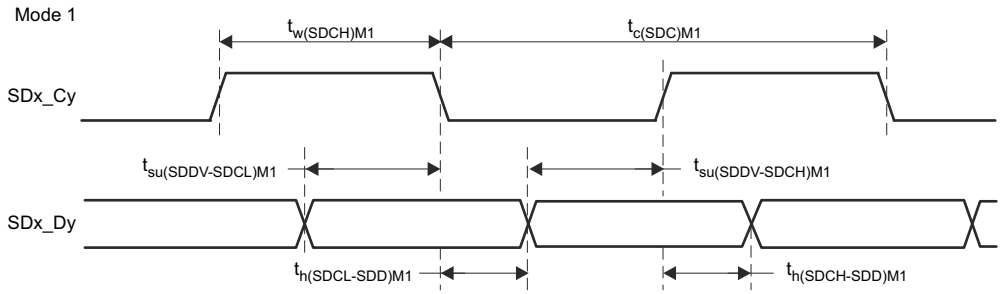

Figure 6-75. SDFM Timing Diagram – Mode 1

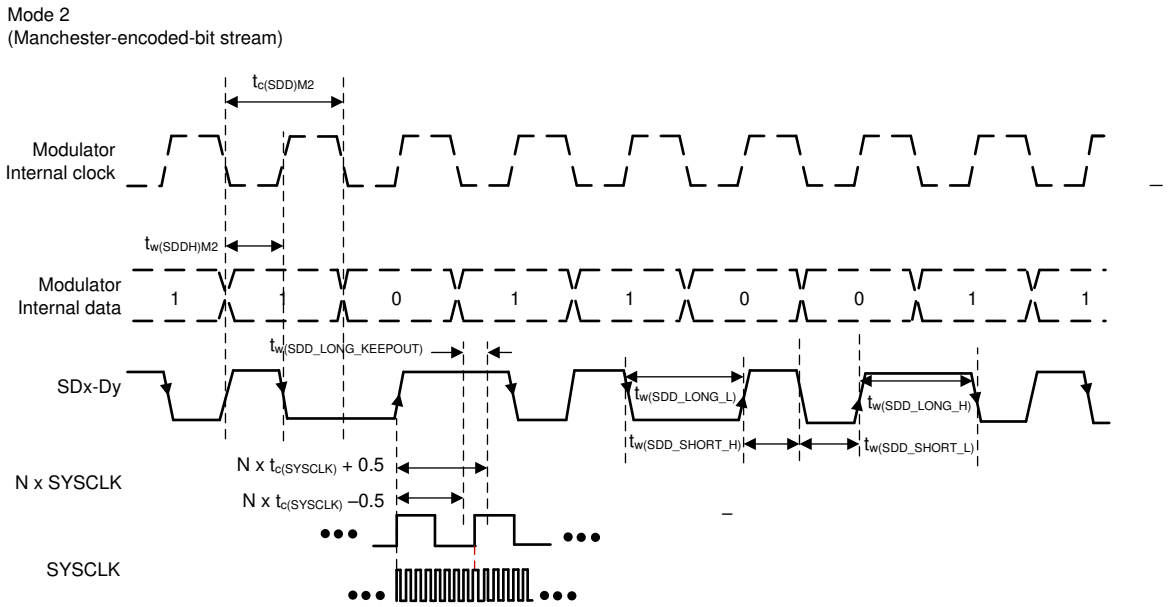

Figure 6-76. SDFM Timing Diagram – Mode 2

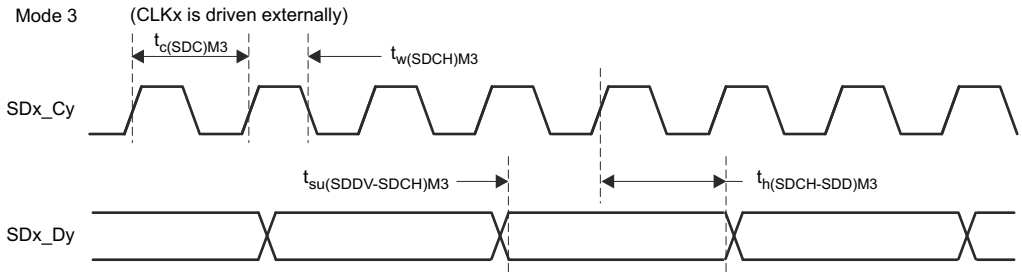

Figure 6-77. SDFM Timing Diagram – Mode 3

Copyright © 2026 Texas Instruments Incorporated

6.11.6.2 SDFM Electrical Data and Timing (Synchronized GPIO)

SDFM operation with synchronous GPIO is defined by setting GPyQSELn = 0b00. When using this synchronized GPIO mode, the timing requirement for $t_{w(GPI)}$ pulse duration of $2t_{c(SYSCLK)}$ must be met. It is important for both SD-Cx and SD-Dx pairs be configured with SYNC option. Section 6.11.6.2 lists the SDFM timing requirements when using the synchronized GPIO (SYNC) option. Figure 6-74, Figure 6-75, Figure 6-76, and Figure 6-77 show the SDFM timing diagrams.

6.11.6.2.1 SDFM Timing Requirements When Using Synchronized GPIO (SYNC) Option

		MIN	MAX	UNIT
Mode 0				
$t_{c(SDC)M0}$	Cycle time, SDx_Cy	5 * SYSCLK period	256 * SYSCLK period	ns
$t_{w(SDCHL)M0}$	Pulse duration, SDx_Cy high/low	2 * SYSCLK period	3 * SYSCLK period	ns
$t_{su(SDDV-SDCH)M0}$	Setup time, SDx_Dy valid before SDx_Cy goes high	2 * SYSCLK period		ns
$t_{h(SDCH-SDD)M0}$	Hold time, SDx_Dy wait after SDx_Cy goes high	2 * SYSCLK period		ns
Mode 1				
$t_{c(SDC)M1}$	Cycle time, SDx_Cy	10 * SYSCLK period	256 * SYSCLK period	ns
$t_{w(SDCHL)M1}$	Pulse duration, SDx_Cy high/low	2 * SYSCLK period	8 * SYSCLK period	ns
$t_{su(SDDV-SDCL)M1}$	Setup time, SDx_Dy valid before SDx_Cy goes low	2 * SYSCLK period		ns
$t_{su(SDDV-SDCH)M1}$	Setup time, SDx_Dy valid before SDx_Cy goes high	2 * SYSCLK period		ns
$t_{h(SDCL-SDD)M1}$	Hold time, SDx_Dy wait after SDx_Cy goes low	2 * SYSCLK period		ns
$t_{h(SDCH-SDD)M1}$	Hold time, SDx_Dy wait after SDx_Cy goes high	2 * SYSCLK period		ns
Mode 2				
$t_{c(SDD)M2}$	Cycle time, SDx_Dy	Option unavailable		
$t_{w(SDDH)M2}$	Pulse duration, SDx_Dy high			
Mode 3				
$t_{c(SDC)M3}$	Cycle time, SDx_Cy	5 * SYSCLK period	256 * SYSCLK period	ns
$t_{w(SDCHL)M3}$	Pulse duration, SDx_Cy high/low	2 * SYSCLK period	3 * SYSCLK period	ns
$t_{su(SDDV-SDCH)M3}$	Setup time, SDx_Dy valid before SDx_Cy goes high	2 * SYSCLK period		ns
$t_{h(SDCH-SDD)M3}$	Hold time, SDx_Dy wait after SDx_Cy goes high	2 * SYSCLK period		ns

Note

The SDFM Synchronized GPIO (SYNC) option provides protection against SDFM module corruption due to occasional random noise glitches on the SDx_Cy pin that may result in a false comparator trip and filter output.

The SDFM Synchronized GPIO (SYNC) mode does not provide protection against persistent violations of the above timing requirements. Timing violations will result in data corruption proportional to the number of bits which violate the requirements.

Copyright © 2026 Texas Instruments Incorporated

6.12 Communications Peripherals

6.12.1 Controller Area Network (CAN)

Note

The CAN module uses the IP known as *DCAN*. This document uses the names *CAN* and *DCAN* interchangeably to reference this peripheral.

The CAN module implements the following features:

- Complies with ISO11898-1 (Bosch® CAN protocol specification 2.0 A and B)
- Bit rates up to 1 Mbps
- Multiple clock sources
- 32 message objects (mailboxes), each with the following properties:
  - Configurable as receive or transmit
  - Configurable with standard (11-bit) or extended (29-bit) identifier
  - Supports programmable identifier receive mask
  - Supports data and remote frames
  - Holds 0 to 8 bytes of data
  - Parity-checked configuration and data RAM
- Individual identifier mask for each message object
- Programmable FIFO mode for message objects
- Programmable loopback modes for self-test operation
- Suspend mode for debug support
- Software module reset
- Automatic bus on after bus-off state by a programmable 32-bit timer
- Two interrupt lines
- DMA support

Note

For a CAN bit clock of 100 MHz, the smallest bit rate possible is 3.90625 kbps.

Note

The accuracy of the on-chip zero-pin oscillator is in Section 6.9.3.5.1. Depending on parameters such as the CAN bit timing settings, bit rate, bus length, and propagation delay, the accuracy of this oscillator may not meet the requirements of the CAN protocol. In this situation, an external clock source must be used.

Figure 6-78 shows the CAN block diagram.

Copyright © 2026 Texas Instruments Incorporated

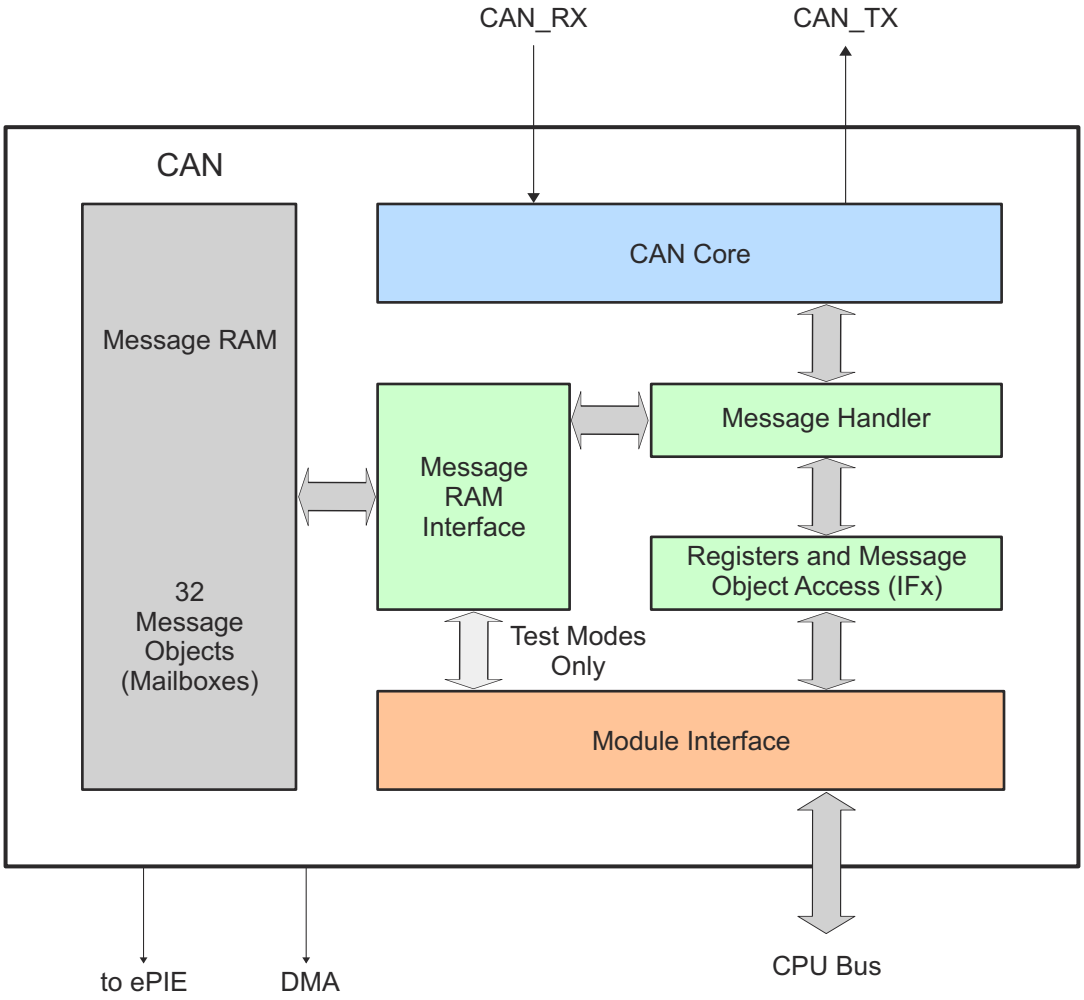

Figure 6-78. CAN Block Diagram

6.12.2 Inter-Integrated Circuit (I2C)

The I2C module has the following features:

- Compliance with the NXP Semiconductors I^2C-bus specification (version 2.1):
  - Support for 8-bit format transfers
  - 7-bit and 10-bit addressing modes
  - General call
  - START byte mode
  - Support for multiple master-transmitters and slave-receivers
  - Support for multiple slave-transmitters and master-receivers
  - Combined master transmit/receive and receive/transmit mode
  - Data transfer rate from 10 kbps up to 400 kbps (Fast-mode)
- One 16-byte receive FIFO and one 16-byte transmit FIFO
- Supports two ePIE interrupts
  - I2Cx interrupt – Any of the below conditions can be configured to generate an I2Cx interrupt:
    - Transmit Ready
    - Receive Ready
    - Register-Access Ready
    - No-Acknowledgment
    - Arbitration-Lost
    - Stop Condition Detected
    - Addressed-as-Slave
  - I2Cx_FIFO interrupts:
    - Transmit FIFO interrupt
    - Receive FIFO interrupt
- Module enable and disable capability
- Free data format mode

Figure 6-79 shows how the I2C peripheral module interfaces within the device.

Copyright © 2026 Texas Instruments Incorporated

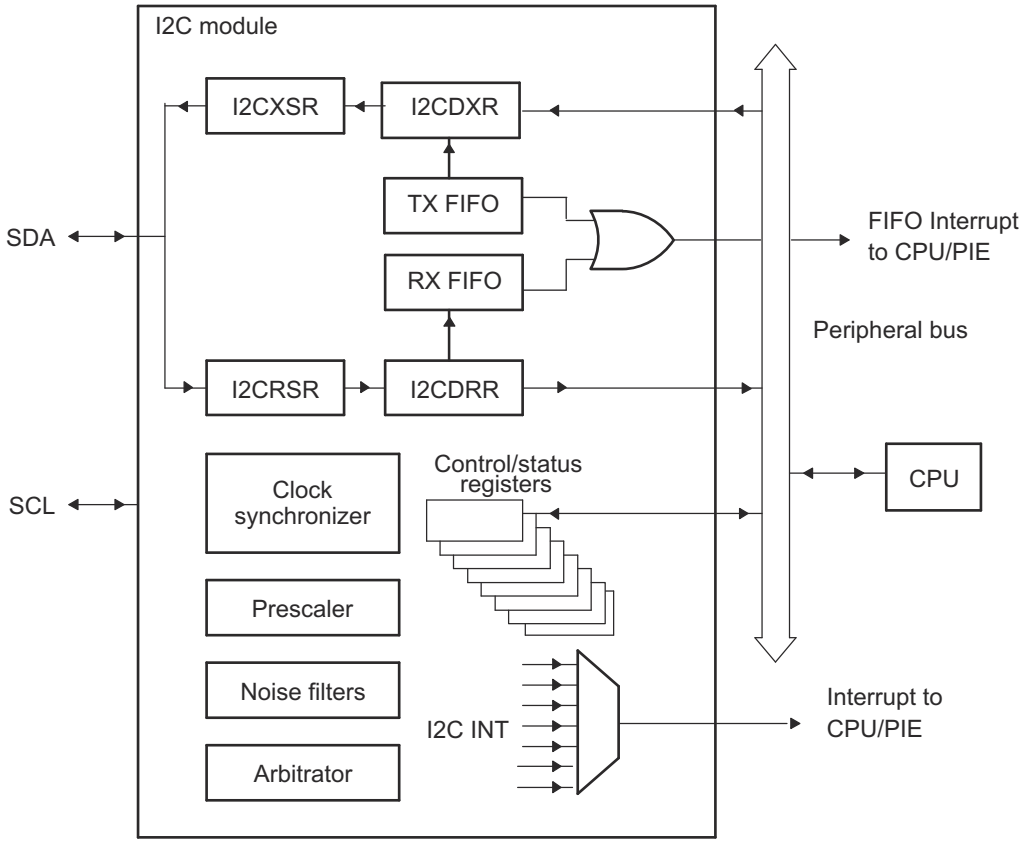

Figure 6-79. I2C Peripheral Module Interfaces

6.12.2.1 I2C Electrical Data and Timing

Section 6.12.2.1.1 lists the I2C timing requirements. Section 6.12.2.1.2 lists the I2C switching characteristics. Figure 6-80 shows the I2C timing diagram.

6.12.2.1.1 I2C Timing Requirements

NO.			MIN	MAX	UNIT
Standard mode					
T0	f_{mod}	I2C module frequency	7	12	MHz
T1	$t_{h(SDA-SCL)START}$	Hold time, START condition, SCL fall delay after SDA fall	4.0		µs
T2	$t_{su(SCL-SDA)START}$	Setup time, Repeated START, SCL rise before SDA fall delay	4.0		µs
T3	$t_{h(SCL-DAT)}$	Hold time, data after SCL fall	0		µs
T4	$t_{su(DAT-SCL)}$	Setup time, data before SCL rise	250(2)		ns
T5	$t_{r(SDA)}$	Rise time, SDA		1000(1)	ns
T6	$t_{r(SCL)}$	Rise time, SCL		1000(1)	ns
T7	$t_{f(SDA)}$	Fall time, SDA		300	ns
T8	$t_{f(SCL)}$	Fall time, SCL		300	ns
T9	$t_{su(SCL-SDA)STOP}$	Setup time, STOP condition, SCL rise before SDA rise delay	4.0		µs
T10	$t_{w(SP)}$	Pulse duration of spikes that will be suppressed by filter	0	50	ns
T11	C_b	capacitance load on each bus line		400	pF
Fast mode					
T0	f_{mod}	I2C module frequency	7	12	MHz
T1	$t_{h(SDA-SCL)START}$	Hold time, START condition, SCL fall delay after SDA fall	0.6		µs
T2	$t_{su(SCL-SDA)START}$	Setup time, Repeated START, SCL rise before SDA fall delay	0.6		µs
T3	$t_{h(SCL-DAT)}$	Hold time, data after SCL fall	0		µs
T4	$t_{su(DAT-SCL)}$	Setup time, data before SCL rise	100		ns
T5	$t_{r(SDA)}$	Rise time, SDA	20	300	ns
T6	$t_{r(SCL)}$	Rise time, SCL	20	300	ns
T7	$t_{f(SDA)}$	Fall time, SDA	11.4	300	ns
T8	$t_{f(SCL)}$	Fall time, SCL	11.4	300	ns
T9	$t_{su(SCL-SDA)STOP}$	Setup time, STOP condition, SCL rise before SDA rise delay	0.6		µs
T10	$t_{w(SP)}$	Pulse duration of spikes that will be suppressed by filter	0	50	ns
T11	C_b	capacitance load on each bus line		400	pF

(1) In order to minimize the rise time, TI recommends using a strong pullup on both the SDA and SCL bus lines on the order of 2.2-kΩ net pullup resistance. It is also recommended that the value of the pullup resistance used on both SCL and SDA pins be matched.
(2) The C2000 I2C is a Fast-mode device. There is a limitation when using the I2C as a target transmitter with a standard mode host. For more information, see the *TMS320F28004x Real-Time MCUs Silicon Errata*.

6.12.2.1.2 I2C Switching Characteristics

over recommended operating conditions (unless otherwise noted)

NO.	PARAMETER		TEST CONDITIONS	MIN	MAX	UNIT
Standard mode						
S1	f_{SCL}	SCL clock frequency		0	100	kHz

Copyright © 2026 Texas Instruments Incorporated

6.12.2.1.2 I2C Switching Characteristics (continued)

over recommended operating conditions (unless otherwise noted)

NO.	PARAMETER		TEST CONDITIONS	MIN	MAX	UNIT
S2	T_{SCL}	SCL clock period		10		µs
S3	$t_{w(SCLL)}$	Pulse duration, SCL clock low		4.7		µs
S4	$t_{w(SCLH)}$	Pulse duration, SCL clock high		4.0		µs
S5	t_{BUF}	Bus free time between STOP and START conditions		4.7		µs
S6	$t_{v(SCL-DAT)}$	Valid time, data after SCL fall			3.45	µs
S7	$t_{v(SCL-ACK)}$	Valid time, Acknowledge after SCL fall			3.45	µs
S8	I_I	Input current on pins	0.1 V_{bus} < V_i < 0.9 V_{bus}	–10	10	µA
Fast mode						
S1	f_{SCL}	SCL clock frequency		0	400	kHz
S2	T_{SCL}	SCL clock period		2.5		µs
S3	$t_{w(SCLL)}$	Pulse duration, SCL clock low		1.3		µs
S4	$t_{w(SCLH)}$	Pulse duration, SCL clock high		0.6		µs
S5	t_{BUF}	Bus free time between STOP and START conditions		1.3		µs
S6	$t_{v(SCL-DAT)}$	Valid time, data after SCL fall			0.9	µs
S7	$t_{v(SCL-ACK)}$	Valid time, Acknowledge after SCL fall			0.9	µs
S8	I_I	Input current on pins	0.1 V_{bus} < V_i < 0.9 V_{bus}	–10	10	µA

6.12.2.1.3 I2C Timing Diagram

Note

To meet all of the I2C protocol timing specifications, the I2C module clock (Fmod) must be configured in the range from 7 MHz to 12 MHz.

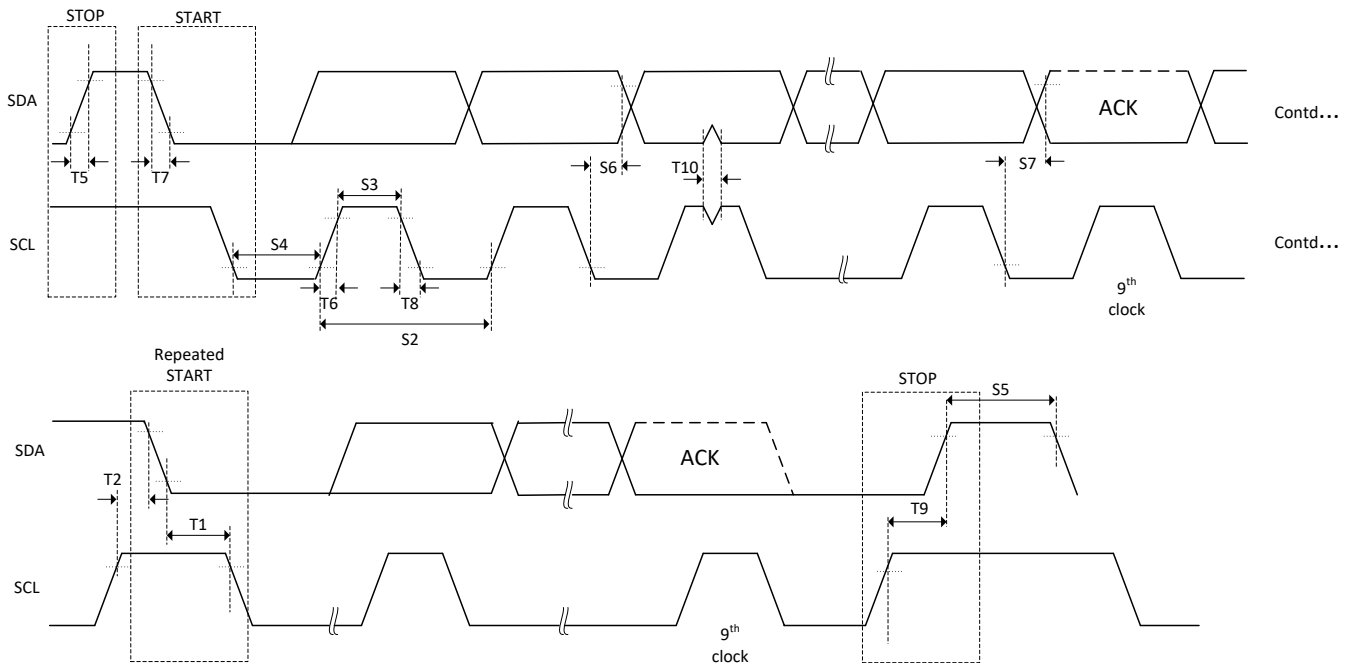

Figure 6-80. I2C Timing Diagram

6.12.3 Power Management Bus (PMBus) Interface

The PMBus module has the following features:

- Compliance with the SMI Forum PMBus Specification (Part I v1.0 and Part II v1.1)
- Support for master and slave modes
- Support for I2C mode
- Support for two speeds:
  - Standard Mode: Up to 100 kHz
  - Fast Mode: Up to 400 kHz
- Packet error checking
- CONTROL and ALERT signals
- Clock high and low time-outs
- Four-byte transmit and receive buffers
- One maskable interrupt, which can be generated by several conditions:
  - Receive data ready
  - Transmit buffer empty
  - Slave address received
  - End of message
  - ALERT input asserted
  - Clock low time-out
  - Clock high time-out
  - Bus free

Figure 6-81 shows the PMBus block diagram.

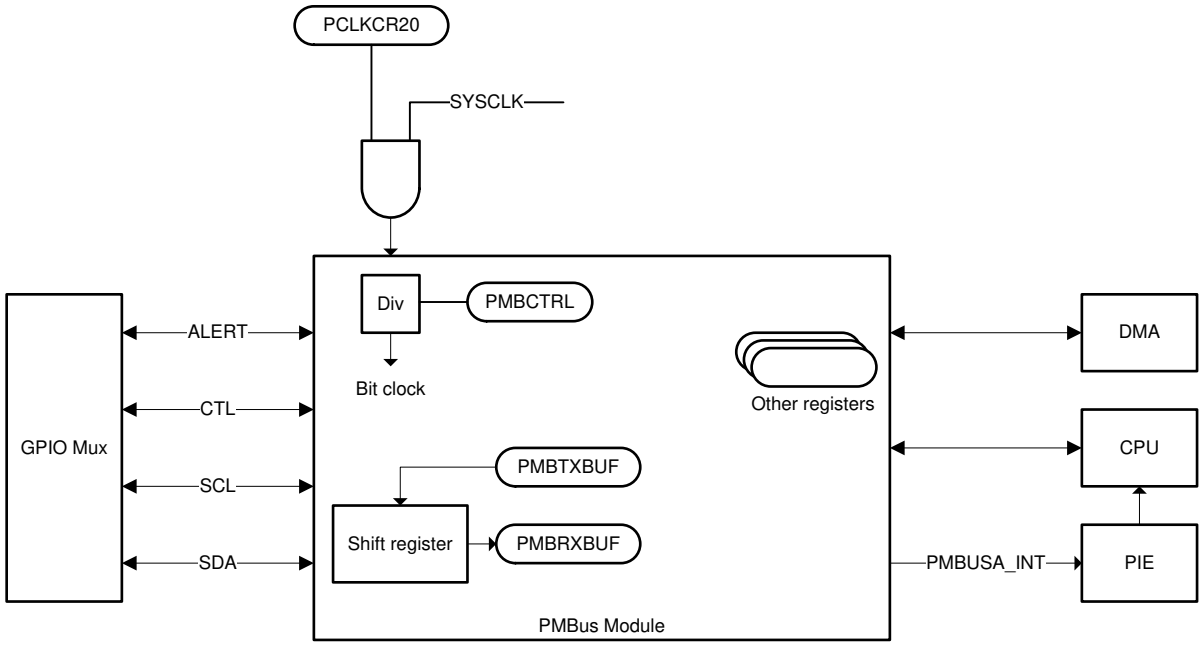

Figure 6-81. PMBus Block Diagram

Copyright © 2026 Texas Instruments Incorporated

6.12.3.1 PMBus Electrical Data and Timing

Section 6.12.3.1.1 lists the PMBus electrical characteristics. Section 6.12.3.1.2 lists the PMBUS fast mode switching characteristics. Section 6.12.3.1.3 lists the PMBUS standard mode switching characteristics.

6.12.3.1.1 PMBus Electrical Characteristics

over recommended operating conditions (unless otherwise noted)

PARAMETER		TEST CONDITIONS	MIN	TYP	MAX	UNIT
V_{IL}	Valid low-level input voltage				0.8	V
V_{IH}	Valid high-level input voltage		2.1		VDDIO	V
V_{OL}	Low-level output voltage	At I_{pullup} = 4 mA			0.4	V
I_{OL}	Low-level output current	V_{OL} ≤ 0.4 V	4			mA
t_{SP}	Pulse width of spikes that must be suppressed by the input filter		0		50	ns
I_i	Input leakage current on each pin	0.1 Vbus < Vi < 0.9 Vbus	–10		10	µA
C_i	Capacitance on each pin				10	pF

6.12.3.1.2 PMBus Fast Mode Switching Characteristics

over recommended operating conditions (unless otherwise noted)

PARAMETER		TEST CONDITIONS	MIN	TYP	MAX	UNIT
f_{SCL}	SCL clock frequency		10		400	kHz
t_{BUF}	Bus free time between STOP and START conditions		1.3			µs
$t_{HD;STA}$	START condition hold time -- SDA fall to SCL fall delay		0.6			µs
$t_{SU;STA}$	Repeated START setup time -- SCL rise to SDA fall delay		0.6			µs
$t_{SU;STO}$	STOP condition setup time -- SCL rise to SDA rise delay		0.6			µs
$t_{HD;DAT}$	Data hold time after SCL fall		300			ns
$t_{SU;DAT}$	Data setup time before SCL rise		100			ns
$t_{Timeout}$	Clock low time-out		25		35	ms
t_{LOW}	Low period of the SCL clock		1.3			µs
t_{HIGH}	High period of the SCL clock		0.6		50	µs
$t_{LOW;SEXT}$	Cumulative clock low extend time (slave device)	From START to STOP			25	ms
$t_{LOW;MEXT}$	Cumulative clock low extend time (master device)	Within each byte			10	ms
t_r	Rise time of SDA and SCL	5% to 95%	20		300	ns
t_f	Fall time of SDA and SCL	95% to 5%	20		300	ns

Copyright © 2026 Texas Instruments Incorporated

6.12.3.1.3 PMBus Standard Mode Switching Characteristics

over recommended operating conditions (unless otherwise noted)

PARAMETER		TEST CONDITIONS	MIN	TYP	MAX	UNIT
f_{SCL}	SCL clock frequency		10		100	kHz
t_{BUF}	Bus free time between STOP and START conditions		4.7			µs
$t_{HD;STA}$	START condition hold time -- SDA fall to SCL fall delay		4			µs
$t_{SU;STA}$	Repeated START setup time -- SCL rise to SDA fall delay		4.7			µs
$t_{SU;STO}$	STOP condition setup time -- SCL rise to SDA rise delay		4			µs
$t_{HD;DAT}$	Data hold time after SCL fall		300			ns
$t_{SU;DAT}$	Data setup time before SCL rise		250			ns
$t_{Timeout}$	Clock low time-out		25		35	ms
t_{LOW}	Low period of the SCL clock		4.7			µs
t_{HIGH}	High period of the SCL clock		4		50	µs
$t_{LOW;SEXT}$	Cumulative clock low extend time (slave device)	From START to STOP			25	ms
$t_{LOW;MEXT}$	Cumulative clock low extend time (master device)	Within each byte			10	ms
t_r	Rise time of SDA and SCL				1000	ns
t_f	Fall time of SDA and SCL				300	ns

Copyright © 2026 Texas Instruments Incorporated

6.12.4 Serial Communications Interface (SCI)

The SCI is a 2-wire asynchronous serial port, commonly known as a UART. The SCI module supports digital communications between the CPU and other asynchronous peripherals that use the standard non-return-to-zero (NRZ) format

The SCI receiver and transmitter each have a 16-level-deep FIFO for reducing servicing overhead, and each has its own separate enable and interrupt bits. Both can be operated independently for half-duplex communication, or simultaneously for full-duplex communication. To specify data integrity, the SCI checks received data for break detection, parity, overrun, and framing errors. The bit rate is programmable to different speeds through a 16-bit baud-select register.

Features of the SCI module include:

- Two external pins:
  - SCITXD: SCI transmit-output pin
  - SCIRXD: SCI receive-input pin

Note

Both pins can be used as GPIO if not used for SCI.

  - Baud rate programmable to 64K different rates
- Data-word format
  - 1 start bit
  - Data-word length programmable from 1 to 8 bits
  - Optional even/odd/no parity bit
  - 1 or 2 stop bits
- Four error-detection flags: parity, overrun, framing, and break detection
- Two wake-up multiprocessor modes: idle-line and address bit
- Half- or full-duplex operation
- Double-buffered receive and transmit functions
- Transmitter and receiver operations can be accomplished through interrupt-driven or polled algorithms with status flags.
  - Transmitter: TXRDY flag (transmitter-buffer register is ready to receive another character) and TX EMPTY flag (transmitter-shift register is empty)
  - Receiver: RXRDY flag (receiver-buffer register is ready to receive another character), BRKDT flag (break condition occurred), and RX ERROR flag (monitoring four interrupt conditions)
- Separate enable bits for transmitter and receiver interrupts (except BRKDT)
- NRZ format
- Auto baud-detect hardware logic
- 16-level transmit and receive FIFO

Note

All registers in this module are 8-bit registers. When a register is accessed, the register data is in the lower byte (bits 7–0), and the upper byte (bits 15–8) is read as zeros. Writing to the upper byte has no effect.

Figure 6-82 shows the SCI block diagram.

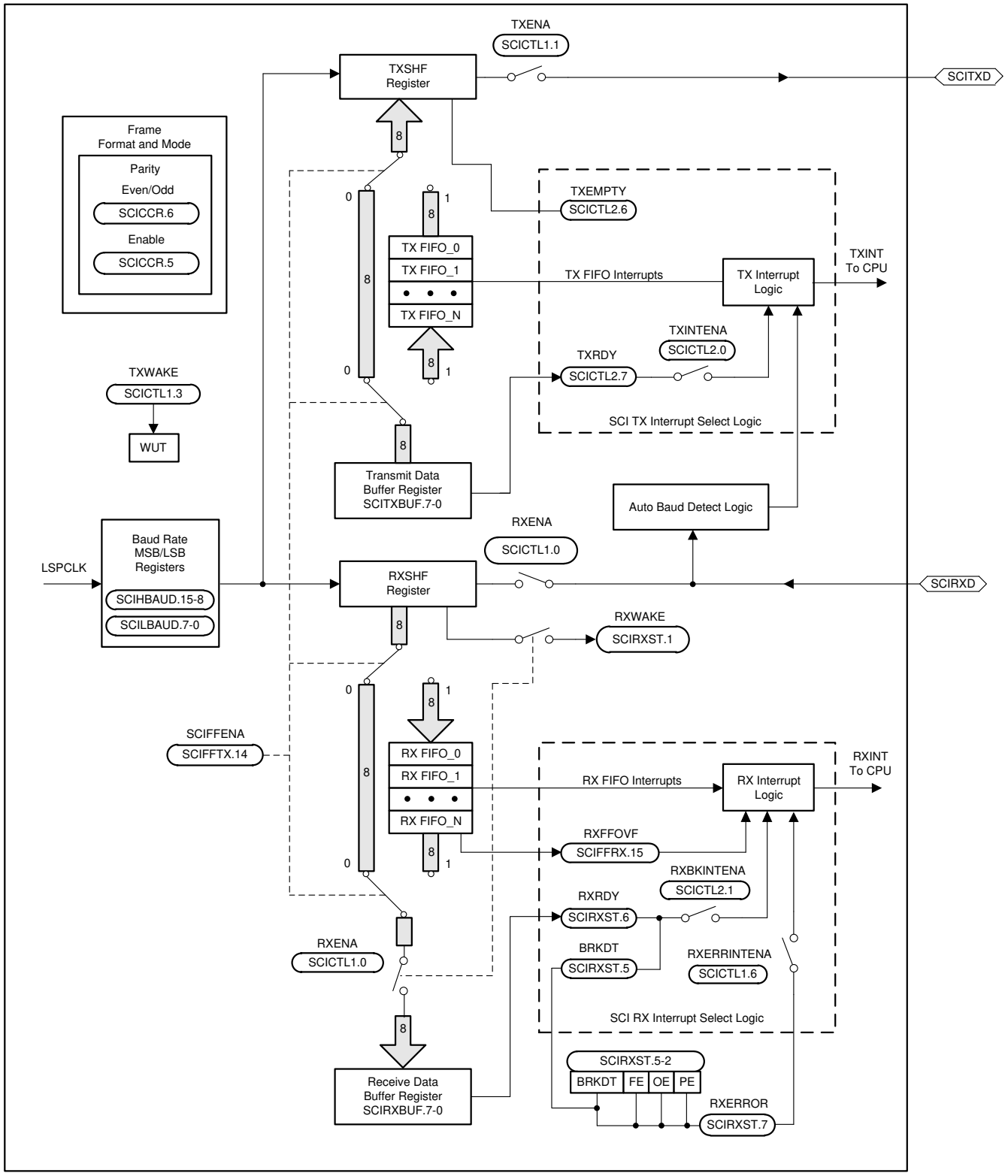

Figure 6-82. SCI Block Diagram

Copyright © 2026 Texas Instruments Incorporated

6.12.5 Serial Peripheral Interface (SPI)

The serial peripheral interface (SPI) is a high-speed synchronous serial input and output (I/O) port that allows a serial bit stream of programmed length (1 to 16 bits) to be shifted into and out of the device at a programmed bit-transfer rate. The SPI is normally used for communications between the MCU controller and external peripherals or another controller. Typical applications include external I/O or peripheral expansion through devices such as shift registers, display drivers, and analog-to-digital converters (ADCs). Multidevice communications are supported by the master or slave operation of the SPI. The port supports a 16-level, receive and transmit FIFO for reducing CPU servicing overhead.

The SPI module features include:

- SPISOMI: SPI slave-output/master-input pin
- SPISIMO: SPI slave-input/master-output pin
- $\overline{\text{SPISTE}}$: SPI slave transmit-enable pin
- SPICLK: SPI serial-clock pin

Note

All four pins can be used as GPIO, if the SPI module is not used.

- Two operational modes: Master and Slave
- Baud rate: 125 different programmable rates. The maximum baud rate that can be employed is limited by the maximum speed of the I/O buffers used on the SPI pins.
- Data word length: 1 to 16 data bits
- Four clocking schemes (controlled by clock polarity and clock phase bits) include:
  - Falling edge without phase delay: SPICLK active-high. SPI transmits data on the falling edge of the SPICLK signal and receives data on the rising edge of the SPICLK signal.
  - Falling edge with phase delay: SPICLK active-high. SPI transmits data one half-cycle ahead of the falling edge of the SPICLK signal and receives data on the falling edge of the SPICLK signal.
  - Rising edge without phase delay: SPICLK inactive-low. SPI transmits data on the rising edge of the SPICLK signal and receives data on the falling edge of the SPICLK signal.
  - Rising edge with phase delay: SPICLK inactive-low. SPI transmits data one half-cycle ahead of the rising edge of the SPICLK signal and receives data on the rising edge of the SPICLK signal.
- Simultaneous receive and transmit operation (transmit function can be disabled in software)
- Transmitter and receiver operations are accomplished through either interrupt-driven or polled algorithm
- 16-level transmit/receive FIFO
- DMA support
- High-speed mode
- Delayed transmit control
- 3-wire SPI mode
- $\overline{\text{SPISTE}}$ inversion for digital audio interface receive mode on devices with two SPI modules

Figure 6-83 shows the SPI CPU interfaces.

Copyright © 2026 Texas Instruments Incorporated

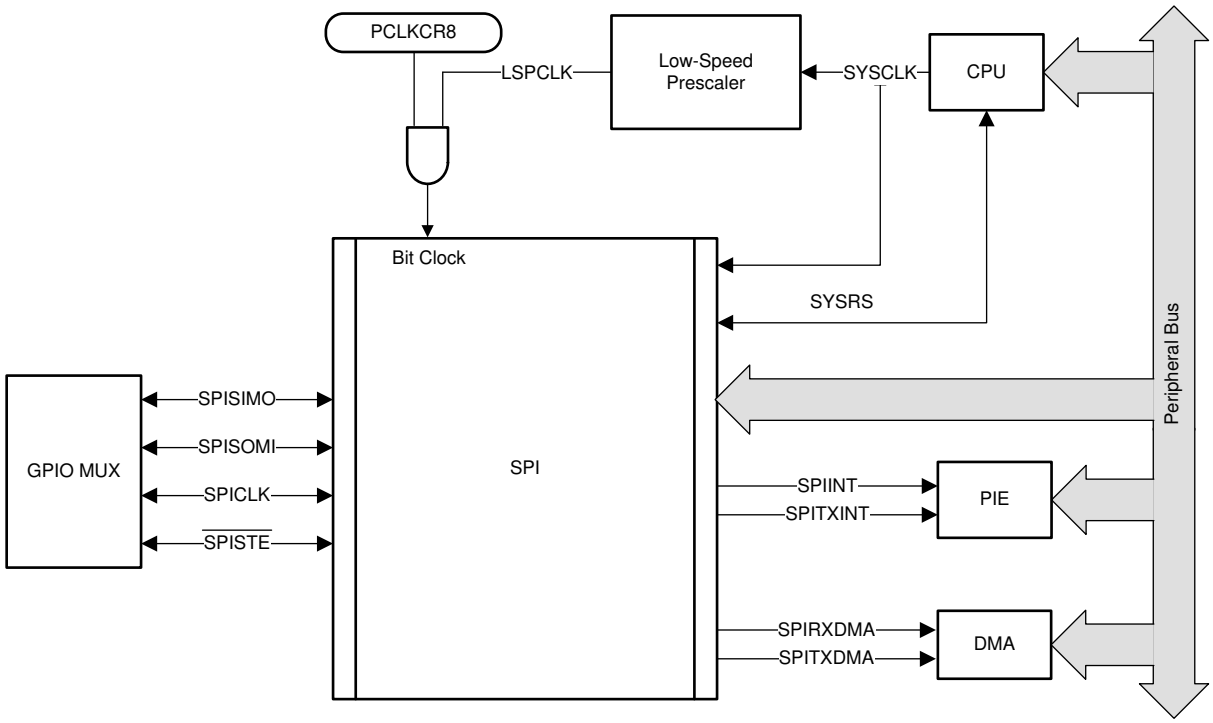

Figure 6-83. SPI CPU Interface

Copyright © 2026 Texas Instruments Incorporated

6.12.5.1 SPI Electrical Data and Timing

The following sections contain the SPI External Timings in Non-High-Speed Mode:

Section 6.12.5.1.1 Non-High-Speed Master Mode Timings
Section 6.12.5.1.2 Non-High-Speed Slave Mode Timings

The following sections contain the SPI External Timings in High-Speed Mode:

Section 6.12.5.1.3 High-Speed Master Mode Timings
Section 6.12.5.1.4 High-Speed Slave Mode Timings

Note

All timing parameters for SPI High-Speed Mode assume a load capacitance of 5 pF on SPICLK, SPISIMO, and SPISOMI.

For more information about the SPI in High-Speed mode, see the Serial Peripheral Interface (SPI) chapter of the *TMS320F28004x Real-Time Microcontrollers Technical Reference Manual*.

Copyright © 2026 Texas Instruments Incorporated

6.12.5.1.1 Non-High-Speed Master Mode Timings

Section 6.12.5.1.1.1 lists the SPI master mode switching characteristics where the clock phase = 0. Figure 6-84 shows the SPI master mode external timing where the clock phase = 0.

Section 6.12.5.1.1.2 lists the SPI master mode switching characteristics where the clock phase = 1. Figure 6-85 shows the SPI master mode external timing where the clock phase = 1.

Section 6.12.5.1.1.3 lists the SPI master mode timing requirements.

6.12.5.1.1.1 SPI Master Mode Switching Characteristics (Clock Phase = 0)

over recommended operating conditions (unless otherwise noted)

NO.	PARAMETER		(BRR + 1) CONDITION(1)	MIN	MAX	UNIT
1	$t_{c(SPC)M}$	Cycle time, SPICLK	Even	$4t_{c(LSPCLK)}$	$128t_{c(LSPCLK)}$	ns
			Odd	$5t_{c(LSPCLK)}$	$127t_{c(LSPCLK)}$	
2	$t_{w(SPC1)M}$	Pulse duration, SPICLK, first pulse	Even	$0.5t_{c(SPC)M} - 3$	$0.5t_{c(SPC)M} + 3$	ns
			Odd	$0.5t_{c(SPC)M} + 0.5t_{c(LSPCLK)} - 3$	$0.5t_{c(SPC)M} + 0.5t_{c(LSPCLK)} + 3$	
3	$t_{w(SPC2)M}$	Pulse duration, SPICLK, second pulse	Even	$0.5t_{c(SPC)M} - 3$	$0.5t_{c(SPC)M} + 3$	ns
			Odd	$0.5t_{c(SPC)M} - 0.5t_{c(LSPCLK)} - 3$	$0.5t_{c(SPC)M} - 0.5t_{c(LSPCLK)} + 3$	
4	$t_{d(SIMO)M}$	Delay time, SPICLK to SPISIMO valid	Even, Odd		3	ns
5	$t_{v(SIMO)M}$	Valid time, SPISIMO valid after SPICLK	Even	$0.5t_{c(SPC)M} - 5$		ns
			Odd	$0.5t_{c(SPC)M} - 0.5t_{c(LSPCLK)} - 5$		
23	$t_{d(SPC)M}$	Delay time, $\overline{\text{SPISTE}}$ valid to SPICLK	Even	$1.5t_{c(SPC)M} - 3t_{c(SYSCLK)} - 6$		ns
			Odd	$1.5t_{c(SPC)M} - 3t_{c(SYSCLK)} - 6$		
24	$t_{d(STE)M}$	Delay time, SPICLK to $\overline{\text{SPISTE}}$ invalid	Even	$0.5t_{c(SPC)M} - 6$		ns
			Odd	$0.5t_{c(SPC)M} - 0.5t_{c(LSPCLK)} - 6$		

(1) The (BRR + 1) condition is Even when (SPIBRR + 1) is even or SPIBRR is 0 or 2. It is Odd when (SPIBRR + 1) is odd and SPIBRR is greater than 3.

Copyright © 2026 Texas Instruments Incorporated

6.12.5.1.1.2 SPI Master Mode Switching Characteristics (Clock Phase = 1)

over recommended operating conditions (unless otherwise noted)

NO.	PARAMETER		(BRR + 1) CONDITION[1]	MIN	MAX	UNIT
1	$t_{c(SPC)M}$	Cycle time, SPICLK	Even	$4t_{c(LSPCLK)}$	$128t_{c(LSPCLK)}$	ns
			Odd	$5t_{c(LSPCLK)}$	$127t_{c(LSPCLK)}$	
2	$t_{w(SPC1)M}$	Pulse duration, SPICLK, first pulse	Even	$0.5t_{c(SPC)M} - 3$	$0.5t_{c(SPC)M} + 3$	ns
			Odd	$0.5t_{c(SPC)M} - 0.5t_{c(LSPCLK)} - 3$	$0.5t_{c(SPC)M} - 0.5t_{c(LSPCLK)} + 3$	
3	$t_{w(SPC2)M}$	Pulse duration, SPICLK, second pulse	Even	$0.5t_{c(SPC)M} - 3$	$0.5t_{c(SPC)M} + 3$	ns
			Odd	$0.5t_{c(SPC)M} + 0.5t_{c(LSPCLK)} - 3$	$0.5t_{c(SPC)M} + 0.5t_{c(LSPCLK)} + 3$	
4	$t_{d(SIMO)M}$	Delay time, SPISIMO valid to SPICLK	Even	$0.5t_{c(SPC)M} - 2$		ns
			Odd	$0.5t_{c(SPC)M} + 0.5t_{c(LSPCLK)} - 2$		
5	$t_{v(SIMO)M}$	Valid time, SPISIMO valid after SPICLK	Even	$0.5t_{c(SPC)M} - 5$		ns
			Odd	$0.5t_{c(SPC)M} - 0.5t_{c(LSPCLK)} - 5$		
23	$t_{d(SPC)M}$	Delay time, $\overline{\text{SPISTE}}$ valid to SPICLK	Even, Odd	$2t_{c(SPC)M} - 3t_{c(SYSCLK)} - 6$		ns
24	$t_{d(STE)M}$	Delay time, SPICLK to $\overline{\text{SPISTE}}$ invalid	Even	$0.5t_{c(SPC)M} - 6$		ns
			Odd	$0.5t_{c(SPC)M} - 0.5t_{c(LSPCLK)} - 6$		

(1) The (BRR + 1) condition is Even when (SPIBRR + 1) is even or SPIBRR is 0 or 2. It is Odd when (SPIBRR + 1) is odd and SPIBRR is greater than 3.

6.12.5.1.1.3 SPI Master Mode Timing Requirements

NO.			(BRR + 1) CONDITION[1]	MIN	MAX	UNIT
8	$t_{su(SOMI)M}$	Setup time, SPISOMI valid before SPICLK	Even, Odd	14		ns
9	$t_{h(SOMI)M}$	Hold time, SPISOMI valid after SPICLK	Even, Odd	0		ns

(1) The (BRR + 1) condition is Even when (SPIBRR + 1) is even or SPIBRR is 0 or 2. It is Odd when (SPIBRR + 1) is odd and SPIBRR is greater than 3.

Copyright © 2026 Texas Instruments Incorporated

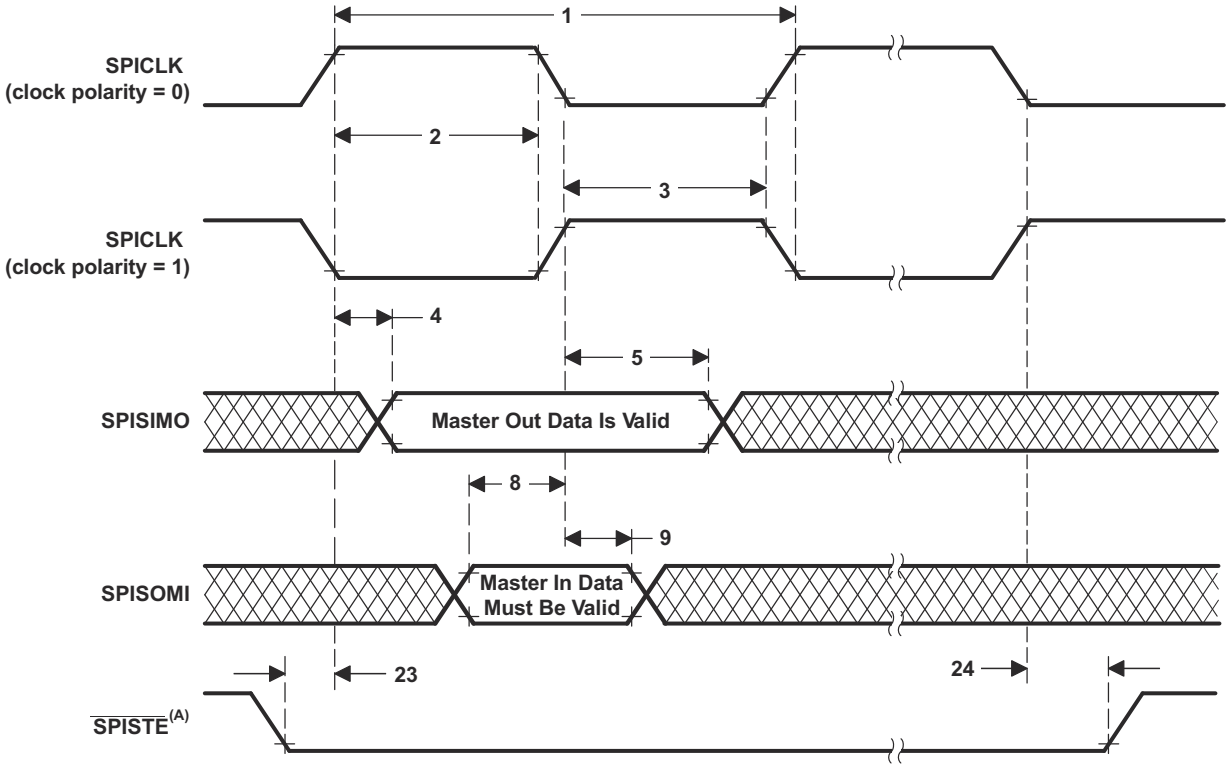

A. On the trailing end of the word, $\overline{\text{SPISTE}}$ will go inactive except between back-to-back transmit words in both FIFO and non-FIFO modes.

Figure 6-84. SPI Master Mode External Timing (Clock Phase = 0)

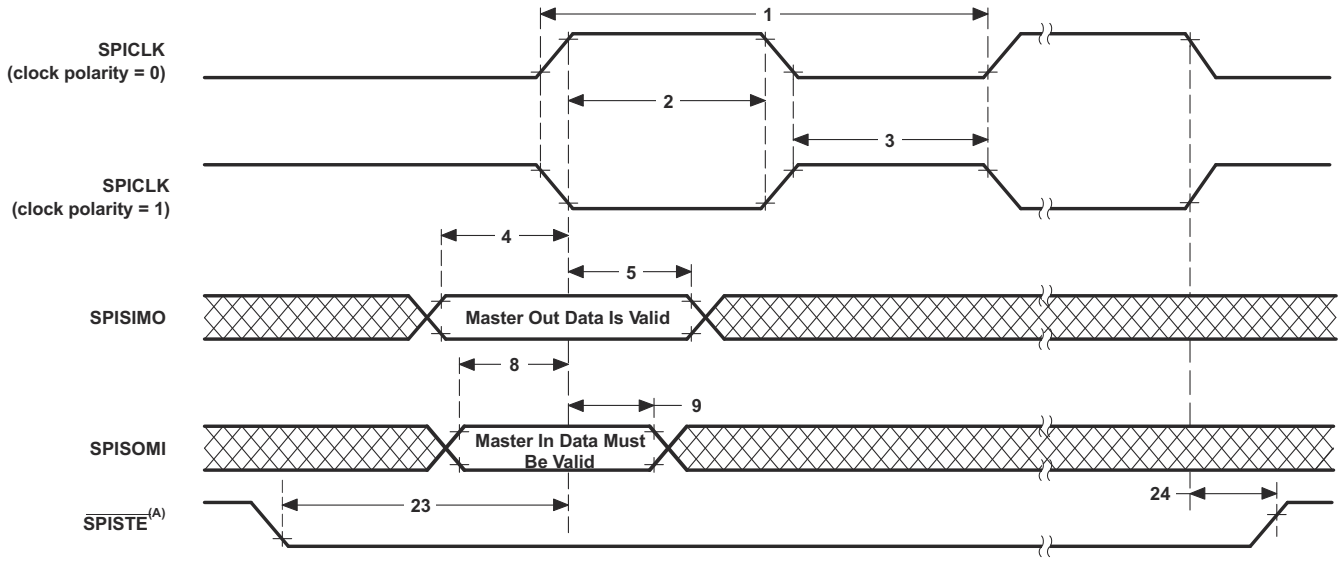

A. On the trailing end of the word, $\overline{\text{SPISTE}}$ will go inactive except between back-to-back transmit words in both FIFO and non-FIFO modes.

Figure 6-85. SPI Master Mode External Timing (Clock Phase = 1)

Copyright © 2026 Texas Instruments Incorporated

6.12.5.1.2 Non-High-Speed Slave Mode Timings

Section 6.12.5.1.2.1 lists the SPI slave mode switching characteristics. Section 6.12.5.1.2.2 lists the SPI slave mode timing requirements.

Figure 6-86 shows the SPI slave mode external timing where the clock phase = 0. Figure 6-87 shows the SPI slave mode external timing where the clock phase = 1.

6.12.5.1.2.1 SPI Slave Mode Switching Characteristics

over recommended operating conditions (unless otherwise noted)

NO.	PARAMETER		MIN	MAX	UNIT
15	$t_{d(SOMI)S}$	Delay time, SPICLK to SPISOMI valid		15	ns
16	$t_{v(SOMI)S}$	Valid time, SPISOMI valid after SPICLK	0		ns

6.12.5.1.2.2 SPI Slave Mode Timing Requirements

NO.			MIN	MAX	UNIT
12	$t_{c(SPC)S}$	Cycle time, SPICLK	$4t_{c(SYSCLK)}$		ns
13	$t_{w(SPC1)S}$	Pulse duration, SPICLK, first pulse	$2t_{c(SYSCLK)} - 1$		ns
14	$t_{w(SPC2)S}$	Pulse duration, SPICLK, second pulse	$2t_{c(SYSCLK)} - 1$		ns
19	$t_{su(SIMO)S}$	Setup time, SPISIMO valid before SPICLK	$1.5t_{c(SYSCLK)}$		ns
20	$t_{h(SIMO)S}$	Hold time, SPISIMO valid after SPICLK	$1.5t_{c(SYSCLK)}$		ns
25	$t_{su(STE)S}$	Setup time, $\overline{SPISTE}$ valid before SPICLK (Clock Phase = 0)	$2t_{c(SYSCLK)} + 2$		ns
		Setup time, $\overline{SPISTE}$ valid before SPICLK (Clock Phase = 1)	$2t_{c(SYSCLK)} + 22$		ns
26	$t_{h(STE)S}$	Hold time, $\overline{SPISTE}$ invalid after SPICLK	$1.5t_{c(SYSCLK)}$		ns

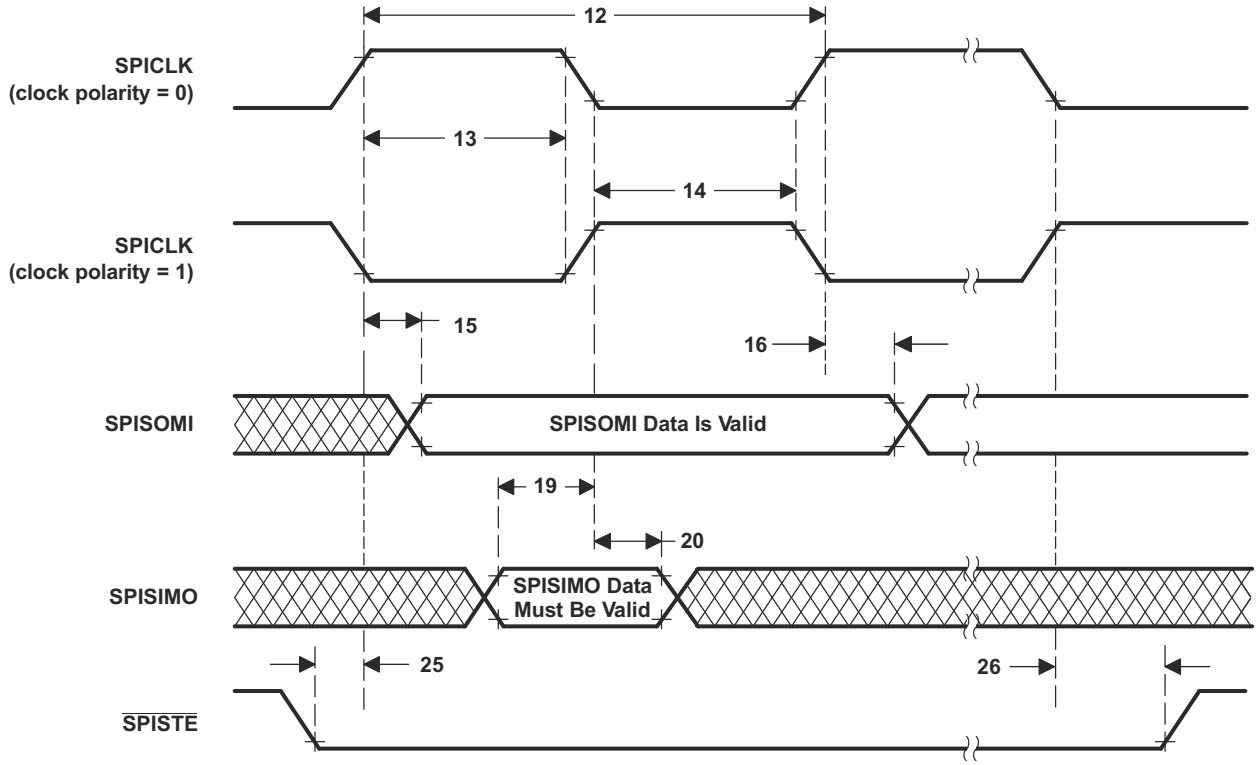

Figure 6-86. SPI Slave Mode External Timing (Clock Phase = 0)

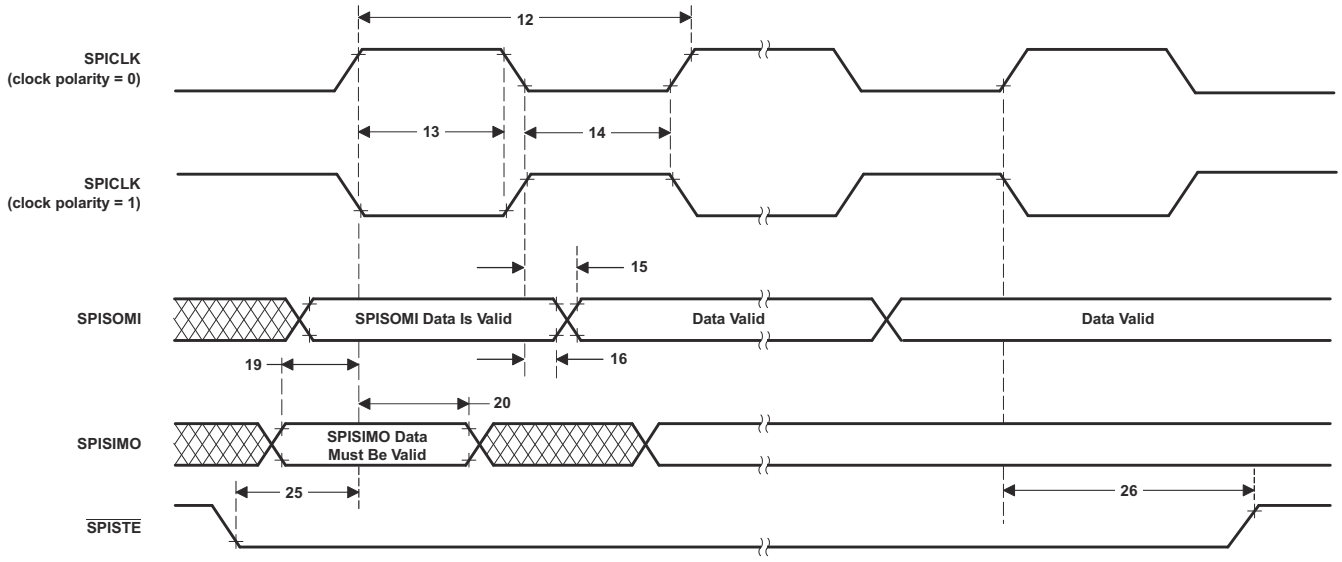

Figure 6-87. SPI Slave Mode External Timing (Clock Phase = 1)

Copyright © 2026 Texas Instruments Incorporated

6.12.5.1.3 High-Speed Master Mode Timings

Section 6.12.5.1.3.1 lists the SPI high-speed master mode switching characteristics where the clock phase = 0. Figure 6-88 shows the high-speed SPI master mode external timing where the clock phase = 0.

Section 6.12.5.1.3.2 lists the SPI high-speed master mode switching characteristics where the clock phase = 1. Figure 6-89 shows the high-speed SPI master mode external timing where the clock phase = 1.

Section 6.12.5.1.3.3 lists the SPI high-speed master mode timing requirements.

6.12.5.1.3.1 SPI High-Speed Master Mode Switching Characteristics (Clock Phase = 0)

over recommended operating conditions (unless otherwise noted)

NO.	PARAMETER		(BRR + 1) CONDITION[1]	MIN	MAX	UNIT
1	$t_{c(SPC)M}$	Cycle time, SPICLK	Even	$4t_{c(LSPCLK)}$	$128t_{c(LSPCLK)}$	ns
			Odd	$5t_{c(LSPCLK)}$	$127t_{c(LSPCLK)}$	
2	$t_{w(SPC1)M}$	Pulse duration, SPICLK, first pulse	Even	$0.5t_{c(SPC)M} - 1$	$0.5t_{c(SPC)M} + 1$	ns
			Odd	$0.5t_{c(SPC)M} + 0.5t_{c(LSPCLK)} - 1$	$0.5t_{c(SPC)M} + 0.5t_{c(LSPCLK)} + 1$	
3	$t_{w(SPC2)M}$	Pulse duration, SPICLK, second pulse	Even	$0.5t_{c(SPC)M} - 1$	$0.5t_{c(SPC)M} + 1$	ns
			Odd	$0.5t_{c(SPC)M} - 0.5t_{c(LSPCLK)} - 1$	$0.5t_{c(SPC)M} - 0.5t_{c(LSPCLK)} + 1$	
4	$t_{d(SIMO)M}$	Delay time, SPICLK to SPISIMO valid	Even, Odd		3	ns
5	$t_{v(SIMO)M}$	Valid time, SPISIMO valid after SPICLK	Even	$0.5t_{c(SPC)M} - 3$		ns
			Odd	$0.5t_{c(SPC)M} - 0.5t_{c(LSPCLK)} - 3$		
23	$t_{d(SPC)M}$	Delay time, $\overline{SPISTE}$ valid to SPICLK	Even	$1.5t_{c(SPC)M} - 3t_{c(SYSCLK)} - 6$		ns
			Odd	$1.5t_{c(SPC)M} - 3t_{c(SYSCLK)} - 6$		
24	$t_{d(STE)M}$	Delay time, SPICLK to $\overline{SPISTE}$ invalid	Even	$0.5t_{c(SPC)M} - 6$		ns
			Odd	$0.5t_{c(SPC)M} - 0.5t_{c(LSPCLK)} - 6$		

(1) The (BRR + 1) condition is Even when (SPIBRR + 1) is even or SPIBRR is 0 or 2. It is Odd when (SPIBRR + 1) is odd and SPIBRR is greater than 3.

6.12.5.1.3.2 SPI High-Speed Master Mode Switching Characteristics (Clock Phase = 1)

over recommended operating conditions (unless otherwise noted)

NO.	PARAMETER		(BRR + 1) CONDITION[1]	MIN	MAX	UNIT
1	$t_{c(SPC)M}$	Cycle time, SPICLK	Even	$4t_{c(LSPCLK)}$	$128t_{c(LSPCLK)}$	ns
			Odd	$5t_{c(LSPCLK)}$	$127t_{c(LSPCLK)}$	
2	$t_{w(SPCH)M}$	Pulse duration, SPICLK, first pulse	Even	$0.5t_{c(SPC)M} - 3$	$0.5t_{c(SPC)M} + 3$	ns
			Odd	$0.5t_{c(SPC)M} - 0.5t_{c(LSPCLK)} - 3$	$0.5t_{c(SPC)M} - 0.5t_{c(LSPCLK)} + 3$	
3	$t_{w(SPC2)M}$	Pulse duration, SPICLK, second pulse	Even	$0.5t_{c(SPC)M} - 3$	$0.5t_{c(SPC)M} + 3$	ns
			Odd	$0.5t_{c(SPC)M} + 0.5t_{c(LSPCLK)} - 3$	$0.5t_{c(SPC)M} + 0.5t_{c(LSPCLK)} + 3$	
4	$t_{d(SIMO)M}$	Delay time, SPISIMO valid to SPICLK	Even	$0.5t_{c(SPC)M} - 1$		ns
			Odd	$0.5t_{c(SPC)M} + 0.5t_{c(LSPCLK)} - 1$		
5	$t_{v(SIMO)M}$	Valid time, SPISIMO valid after SPICLK	Even	$0.5t_{c(SPC)M} - 3$		ns
			Odd	$0.5t_{c(SPC)M} - 0.5t_{c(LSPCLK)} - 3$		

Copyright © 2026 Texas Instruments Incorporated

6.12.5.1.3.2 SPI High-Speed Master Mode Switching Characteristics (Clock Phase = 1) (continued)

over recommended operating conditions (unless otherwise noted)

NO.	PARAMETER		(BRR + 1) CONDITION(1)	MIN	MAX	UNIT
23	$t_{d(SPC)M}$	Delay time, $\overline{SPISTE}$ valid to SPICLK	Even, Odd	$2t_{c(SPC)M} - 3t_{c(SYSCLK)} - 6$		ns
24	$t_{d(STE)M}$	Delay time, SPICLK to $\overline{SPISTE}$ invalid	Even	$0.5t_{c(SPC)M} - 6$		ns
			Odd	$0.5t_{c(SPC)M} - 0.5t_{c(LSPCLK)} - 6$		

(1) The (BRR + 1) condition is Even when (SPIBRR + 1) is even or SPIBRR is 0 or 2. It is Odd when (SPIBRR + 1) is odd and SPIBRR is greater than 3.

6.12.5.1.3.3 SPI High-Speed Master Mode Timing Requirements

NO.			(BRR + 1) CONDITION(1)	MIN	MAX	UNIT
8	$t_{su(SOMI)M}$	Setup time, SPISOMI valid before SPICLK	Even, Odd	2		ns
9	$t_{h(SOMI)M}$	Hold time, SPISOMI valid after SPICLK	Even, Odd	11		ns

(1) The (BRR + 1) condition is Even when (SPIBRR + 1) is even or SPIBRR is 0 or 2. It is Odd when (SPIBRR + 1) is odd and SPIBRR is greater than 3.

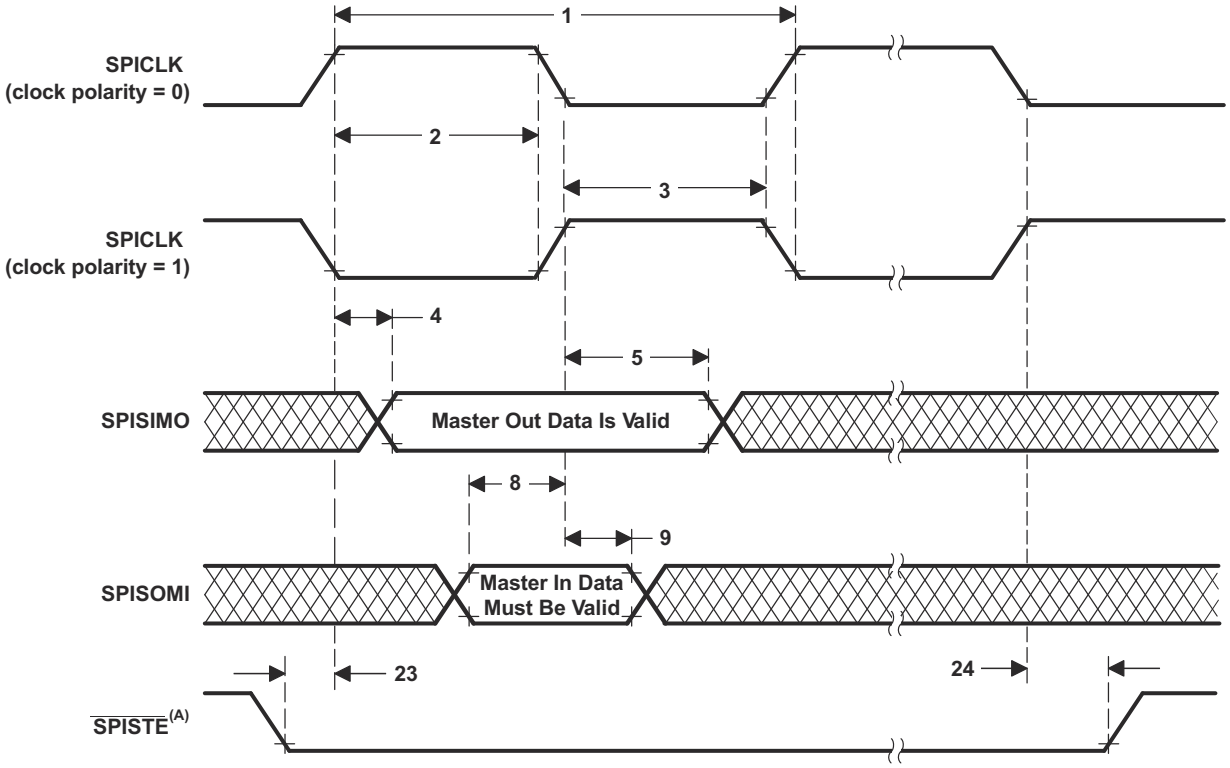

A. On the trailing end of the word, $\overline{SPISTE}$ will go inactive except between back-to-back transmit words in both FIFO and non-FIFO modes.

Figure 6-88. High-Speed SPI Master Mode External Timing (Clock Phase = 0)

Copyright © 2026 Texas Instruments Incorporated

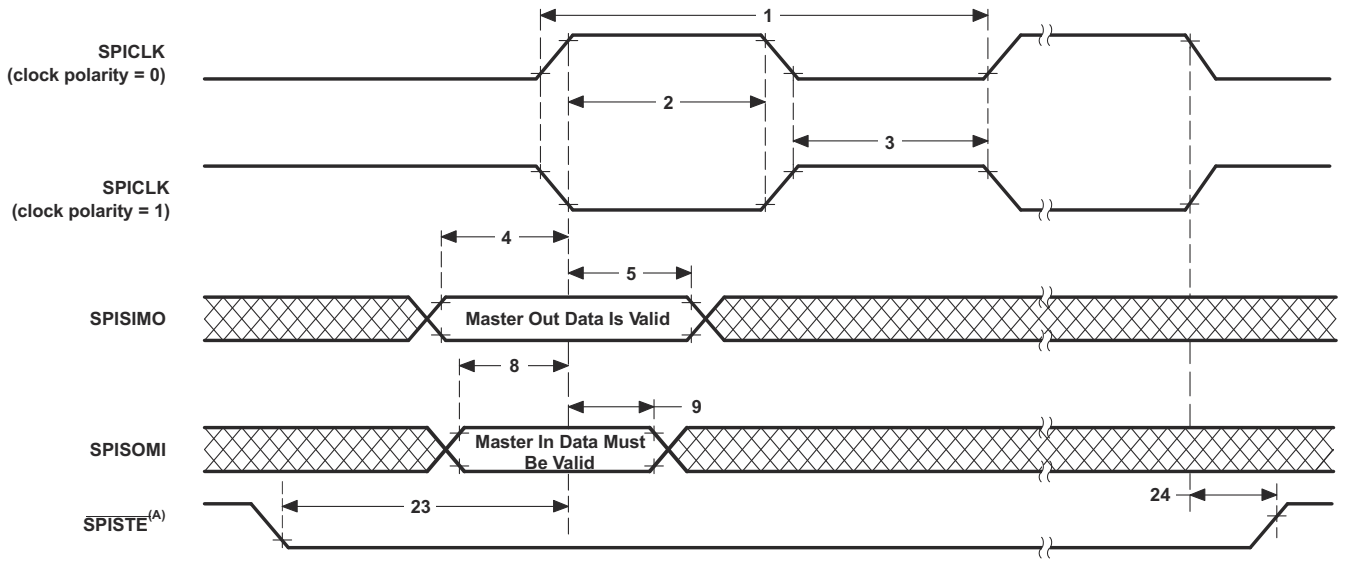

A. On the trailing end of the word, SPISTE will go inactive except between back-to-back transmit words in both FIFO and non-FIFO modes.

Figure 6-89. High-Speed SPI Master Mode External Timing (Clock Phase = 1)

6.12.5.1.4 High-Speed Slave Mode Timings

Section 6.12.5.1.4.1 lists the SPI high-speed slave mode switching characteristics. Section 6.12.5.1.4.2 lists the SPI high-speed slave mode timing requirements.

Figure 6-90 shows the high-speed SPI slave mode external timing where the clock phase = 0. Figure 6-91 shows the high-speed SPI slave mode external timing where the clock phase = 1.

6.12.5.1.4.1 SPI High-Speed Slave Mode Switching Characteristics

over recommended operating conditions (unless otherwise noted)

NO.	PARAMETER		MIN	MAX	UNIT
15	$t_{d(SOMI)S}$	Delay time, SPICLK to SPISOMI valid		15	ns
16	$t_{v(SOMI)S}$	Valid time, SPISOMI valid after SPICLK	4		ns

6.12.5.1.4.2 SPI High-Speed Slave Mode Timing Requirements

NO.			MIN	MAX	UNIT
12	$t_{c(SPC)S}$	Cycle time, SPICLK	$4t_{c(SYSCLK)}$		ns
13	$t_{w(SPC1)S}$	Pulse duration, SPICLK, first pulse	$2t_{c(SYSCLK)} - 1$		ns
14	$t_{w(SPC2)S}$	Pulse duration, SPICLK, second pulse	$2t_{c(SYSCLK)} - 1$		ns
19	$t_{su(SIMO)S}$	Setup time, SPISIMO valid before SPICLK	$1.5t_{c(SYSCLK)}$		ns
20	$t_{h(SIMO)S}$	Hold time, SPISIMO valid after SPICLK	$1.5t_{c(SYSCLK)}$		ns
25	$t_{su(STE)S}$	Setup time, $\overline{\text{SPISTE}}$ valid before SPICLK	$1.5t_{c(SYSCLK)}$		ns
26	$t_{h(STE)S}$	Hold time, $\overline{\text{SPISTE}}$ invalid after SPICLK	$1.5t_{c(SYSCLK)}$		ns

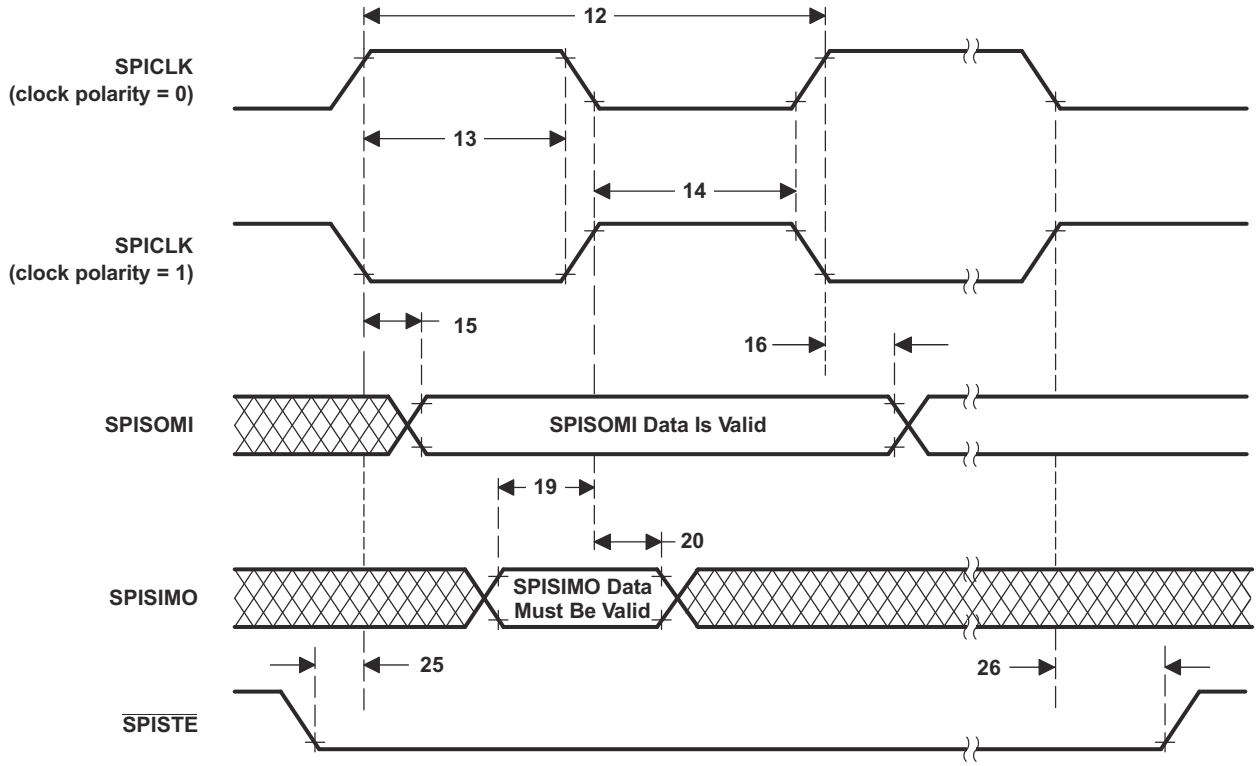

Figure 6-90. High-Speed SPI Slave Mode External Timing (Clock Phase = 0)

Copyright © 2026 Texas Instruments Incorporated

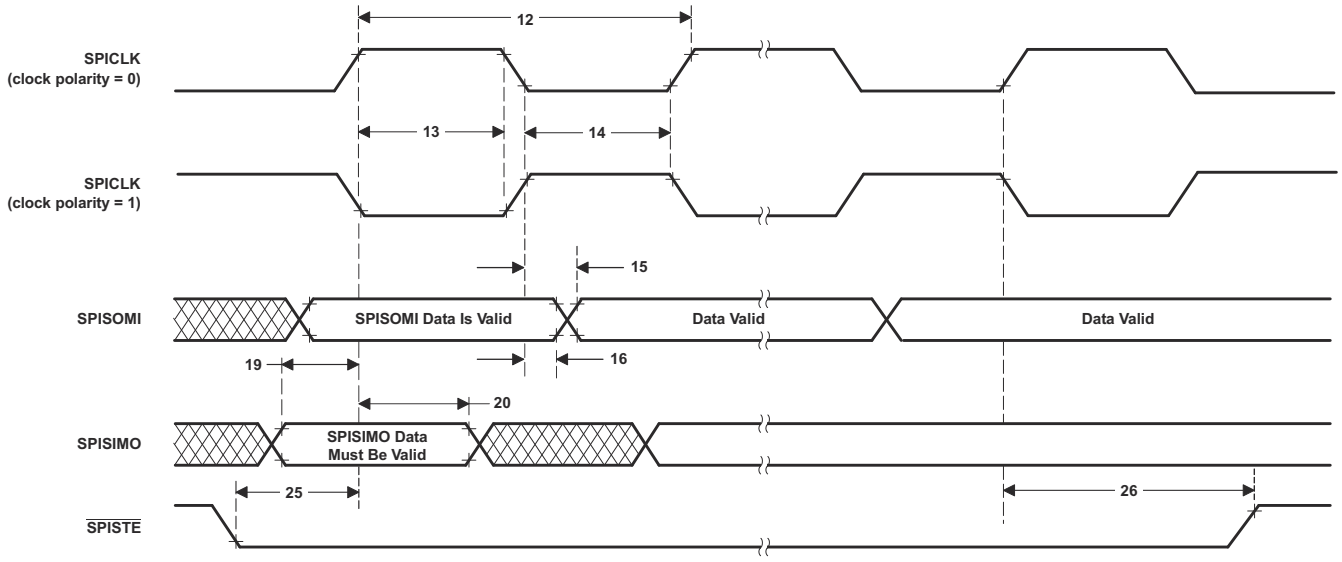

Figure 6-91. High-Speed SPI Slave Mode External Timing (Clock Phase = 1)

6.12.6 Local Interconnect Network (LIN)

This device contains one Local Interconnect Network (LIN) module. The LIN module adheres to the LIN 2.1 standard as defined by the *LIN Specification Package Revision 2.1*. The LIN is a low-cost serial interface designed for applications where the CAN protocol may be too expensive to implement, such as small subnetworks for cabin comfort functions like interior lighting or window control in an automotive application.

The LIN standard is based on the SCI (UART) serial data link format. The communication concept is single-master and multiple-slave with a message identification for multicast transmission between any network nodes.

The LIN module can be programmed to work either as an SCI or as a LIN as the core of the module is an SCI. The hardware features of the SCI are augmented to achieve LIN compatibility. The SCI module is a universal asynchronous receiver-transmitter (UART) that implements the standard non-return-to-zero format.

Though the registers are common for LIN and SCI, the register descriptions have notes to identify the register/bit usage in different modes. Because of this, code written for this module cannot be directly ported to the stand-alone SCI module and vice versa.

The LIN module has the following features:

- Compatibility with LIN 1.3, 2.0 and 2.1 protocols
- Configurable baud rate up to 20 kbps (as per LIN 2.1 protocol)
- Two external pins: LINRX and LINTX
- Multibuffered receive and transmit units
- Identification masks for message filtering
- Automatic master header generation
  - Programmable synchronization break field
  - Synchronization field
  - Identifier field
- Slave automatic synchronization
  - Synchronization break detection
  - Optional baud rate update
  - Synchronization validation
- 2^{31} programmable transmission rates with 7 fractional bits
- Wakeup on LINRX dominant level from transceiver
- Automatic wakeup support
  - Wakeup signal generation
  - Expiration times on wakeup signals
- Automatic bus idle detection
- Error detection
  - Bit error
  - Bus error
  - No-response error
  - Checksum error
  - Synchronization field error
  - Parity error
- Capability to use direct memory access (DMA) for transmit and receive data
- Two interrupt lines with priority encoding for:
  - Receive
  - Transmit
  - ID, error, and status
- Support for LIN 2.0 checksum
- Enhanced synchronizer finite state machine (FSM) support for frame processing
- Enhanced handling of extended frames
- Enhanced baud rate generator
- Update wakeup/go to sleep

Copyright © 2026 Texas Instruments Incorporated

Figure 6-92 shows the LIN block diagram.

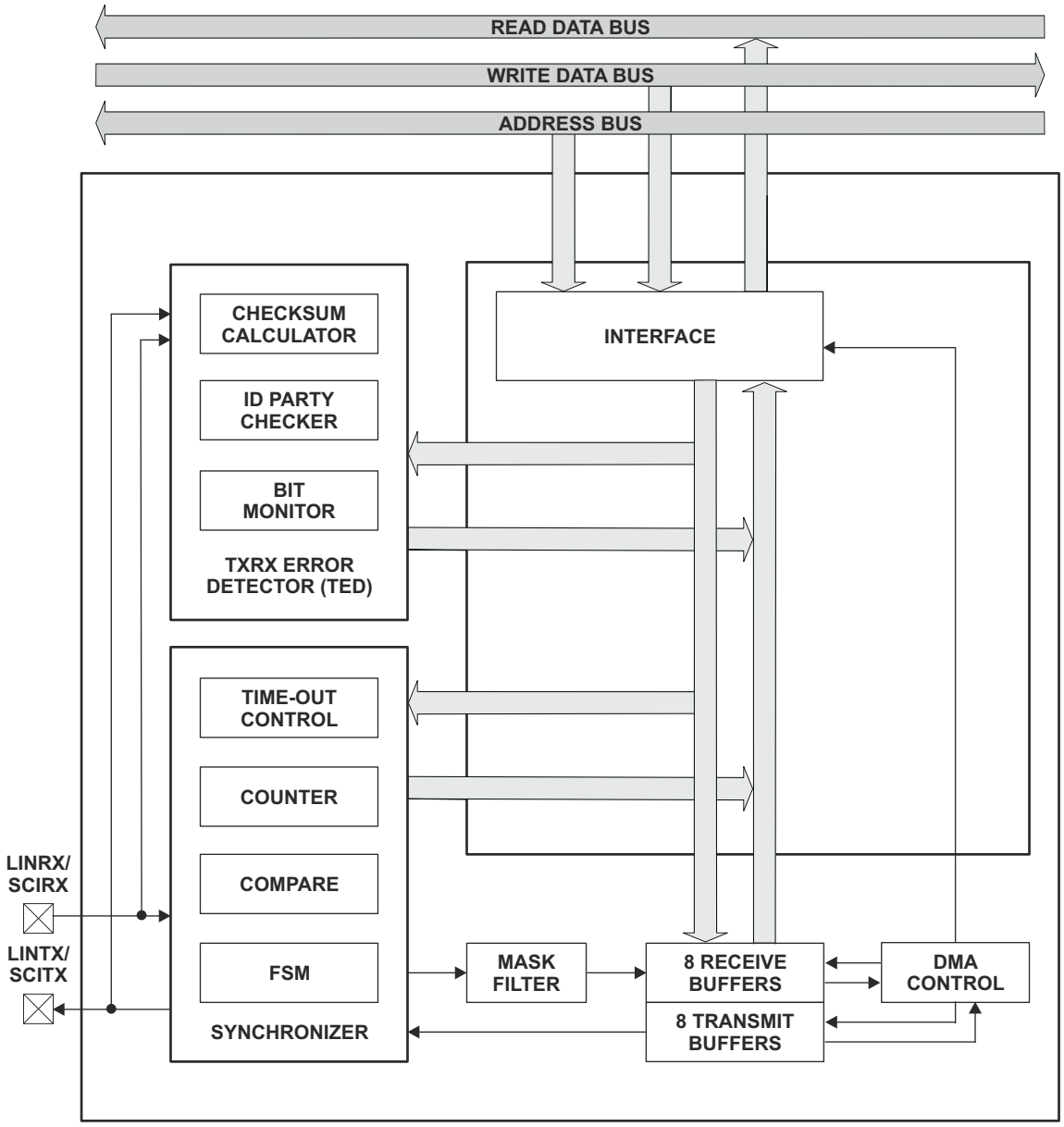

Figure 6-92. LIN Block Diagram

6.12.7 Fast Serial Interface (FSI)

The Fast Serial Interface (FSI) module is a serial communication peripheral capable of reliable and robust high-speed communications. The FSI is designed to ensure data robustness across many system conditions such as chip-to-chip as well as board-to-board across an isolation barrier. Payload integrity checks such as CRC, start- and end-of-frame patterns, and user-defined tags, are encoded before transmit and then verified after receipt without additional CPU interaction. Line breaks can be detected using periodic transmissions, all managed and monitored by hardware. The FSI is also tightly integrated with other control peripherals on the device. To ensure that the latest sensor data or control parameters are available, frames can be transmitted on every control loop period. An integrated skew-compensation block has been added on the receiver to handle skew that may occur between the clock and data signals due to a variety of factors, including trace-length mismatch and skews induced by an isolation chip. With embedded data robustness checks, data-link integrity checks, skew compensation, and integration with control peripherals, the FSI can enable high-speed, robust communication in any system. These and many other features of the FSI follow.

The FSI module includes the following features:

- Independent transmitter and receiver cores
- Source-synchronous transmission
- Dual data rate (DDR)
- One or two data lines
- Programmable data length
- Skew adjustment block to compensate for board and system delay mismatches
- Frame error detection
- Programmable frame tagging for message filtering
- Hardware ping to detect line breaks during communication (ping watchdog)
- Two interrupts per FSI core
- Externally triggered frame generation
- Hardware- or software-calculated CRC
- Embedded ECC computation module
- Register write protection
- DMA support
- CLA task triggering
- SPI compatibility mode (limited features available)

Operating the FSI at maximum speed (50 MHz) at dual data rate (100 Mbps) may require the integrated skew compensation block to be configured according to the specific operating conditions on a case-by-case basis. The *Fast Serial Interface (FSI) Skew Compensation* Application Report provides example software on how to configure and set up the integrated skew compensation block on the Fast Serial Interface.

The FSI consists of independent transmitter (FSITX) and receiver (FSIRX) cores. The FSITX and FSIRX cores are configured and operated independently. The features available on the FSITX and FSIRX are described in Section 6.12.7.1 and Section 6.12.7.2, respectively.

Copyright © 2026 Texas Instruments Incorporated

6.12.7.1 FSI Transmitter

The FSI transmitter module handles the framing of data, CRC generation, signal generation of TXCLK, TXD0, and TXD1, as well as interrupt generation. The operation of the transmitter core is controlled and configured through programmable control registers. The transmitter control registers let the CPU (or the CLA) program, control, and monitor the operation of the FSI transmitter. The transmit data buffer is accessible by the CPU, CLA, and the DMA.

The transmitter has the following features:

- Automated ping frame generation
- Externally triggered ping frames
- Externally triggered data frames
- Software-configurable frame lengths
- 16-word data buffer
- Data buffer underrun and overrun detection
- Hardware-generated CRC on data bits
- Software ECC calculation on select data
- DMA support
- CLA task triggering

Figure 6-93 shows the FSITX CPU interface. Figure 6-94 shows the high-level block diagram of the FSITX. Not all data paths and internal connections are shown. This diagram provides a high-level overview of the internal modules present in the FSITX.

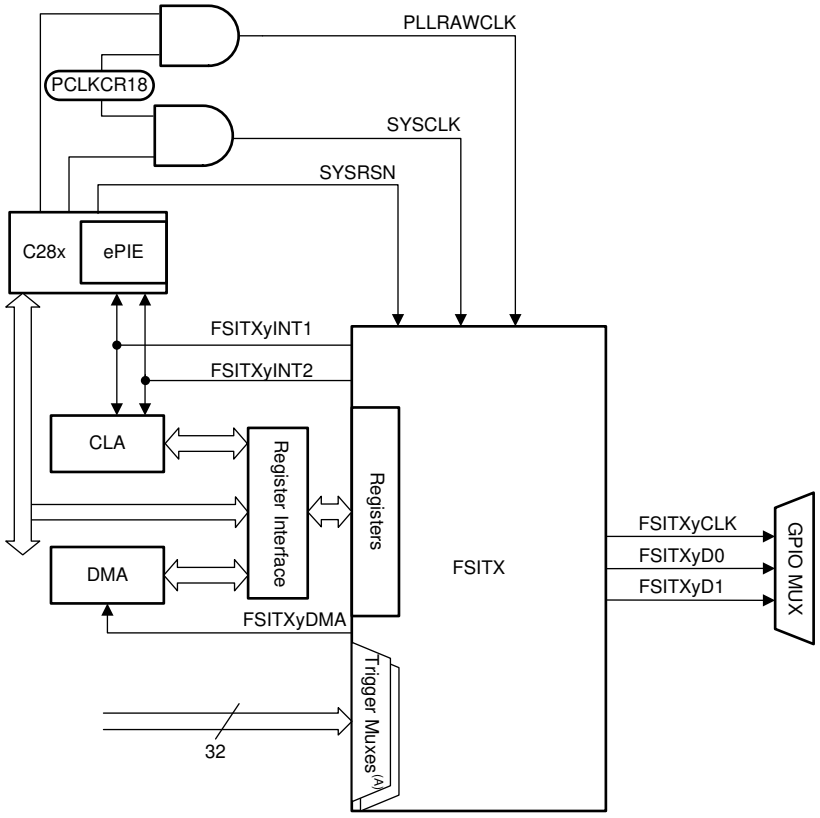

A. The signals connected to the trigger muxes are described in the External Frame Trigger Mux section of the Fast Serial Interface (FSI) chapter in the *TMS320F28004x Real-Time Microcontrollers Technical Reference Manual*.

Figure 6-93. FSITX CPU Interface

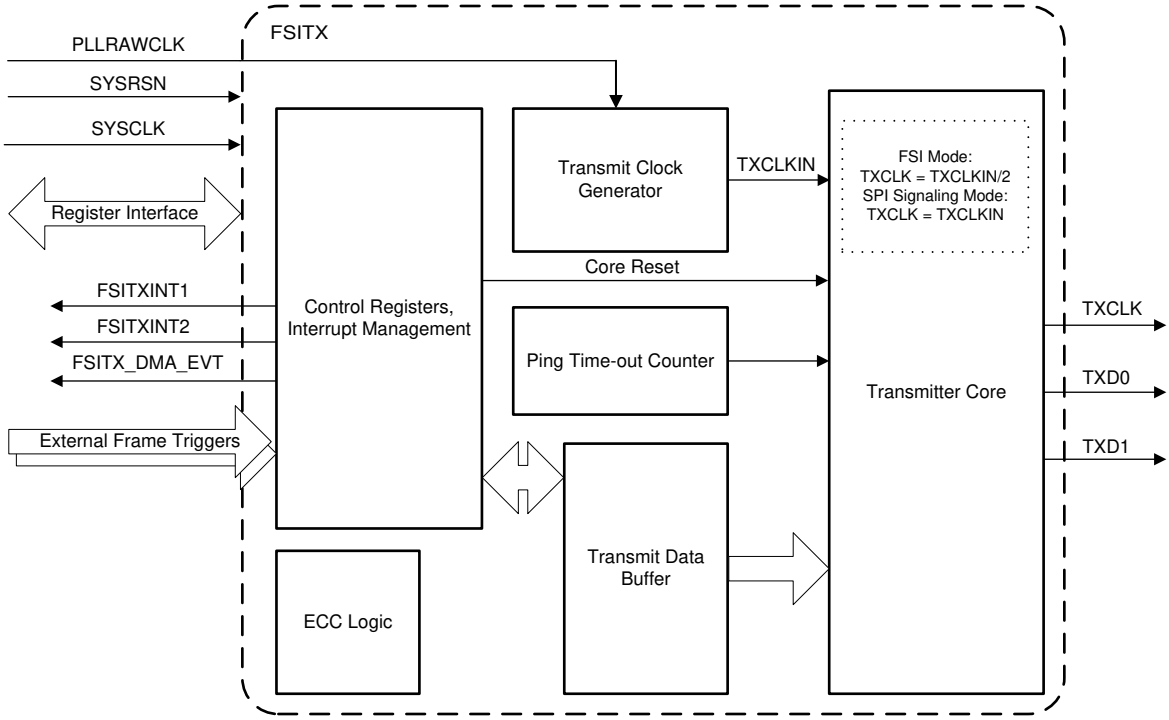

Figure 6-94. FSITX Block Diagram

Copyright © 2026 Texas Instruments Incorporated

6.12.7.1.1 FSITX Electrical Data and Timing

Section 6.12.7.1.1.1 lists the FSITX switching characteristics. Figure 6-95 shows the FSITX timings.

6.12.7.1.1.1 FSITX Switching Characteristics

over operating free-air temperature range (unless otherwise noted)

NO.	PARAMETER		MIN	MAX	UNIT
1	$t_{c(TXCLK)}$	Cycle time, TXCLK	20		ns
2	$t_{w(TXCLK)}$	Pulse width, TXCLK low or TXCLK high	$(0.5t_{c(TXCLK)}) - 1$	$(0.5t_{c(TXCLK)}) + 1$	ns
3	$t_{d(TXCLKL–TXD)}$	Delay time, Data valid after TXCLK rising or falling	$(0.25t_{c(TXCLK)}) - 3.2$	$(0.25t_{c(TXCLK)}) + 4.7$	ns

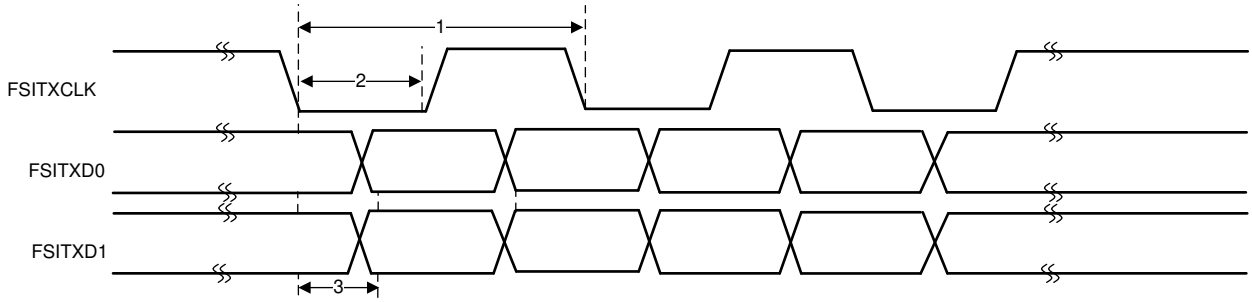

Figure 6-95. FSITX Timings

6.12.7.2 FSI Receiver

The receiver module interfaces to the FSI clock (RXCLK), and data lines (RXD0 and RXD1) after they pass through an optional programmable delay line. The receiver core handles the data framing, CRC computation, and frame-related error checking. The receiver bit clock and state machine are run by the RXCLK input, which is asynchronous to the device system clock.

The receiver control registers let the CPU (or the CLA) program, control, and monitor the operation of the FSIRX. The receive data buffer is accessible by the CPU, CLA, and the DMA.

The receiver core has the following features:

- 16-word data buffer
- Multiple supported frame types
- Ping frame watchdog
- Frame watchdog
- CRC calculation and comparison in hardware
- ECC detection
- Programmable delay line control on incoming signals
- DMA support
- CLA task triggering
- SPI compatibility mode

Figure 6-96 shows the FSIRX CPU interface. Figure 6-97 provides a high-level overview of the internal modules present in the FSIRX. Not all data paths and internal connections are shown.

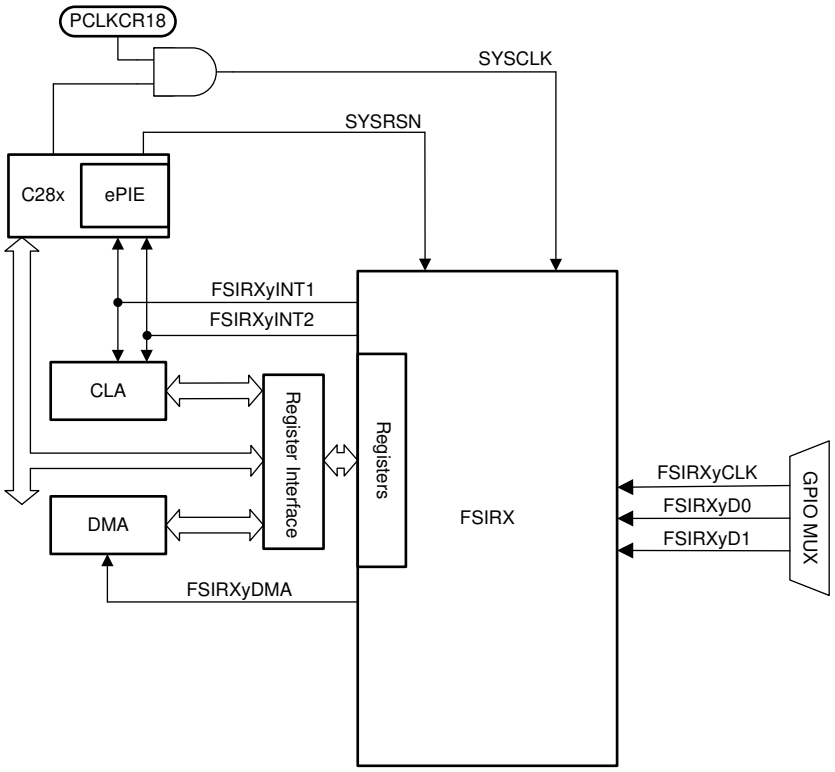

Figure 6-96. FSIRX CPU Interface

Copyright © 2026 Texas Instruments Incorporated

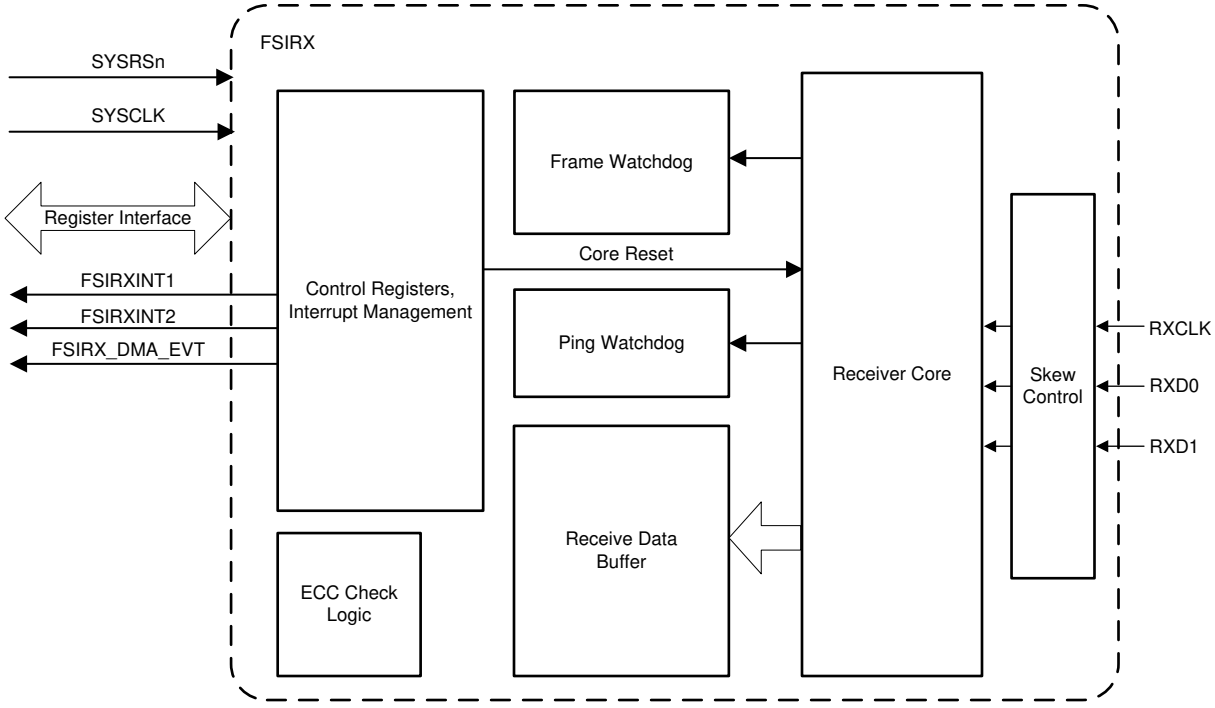

Figure 6-97. FSIRX Block Diagram

6.12.7.2.1 FSIRX Electrical Data and Timing

Section 6.12.7.2.1.1 lists the FSIRX switching characteristics. Section 6.12.7.2.1.2 lists the FSIRX timing requirements. Figure 6-98 shows the FSIRX timings.

6.12.7.2.1.1 FSIRX Switching Characteristics

NO.	PARAMETER		MIN	MAX	UNIT
1	$t_{d(RXCLK)}$	RXCLK delay compensation at RX_DLYLINE_CTRL[RXCLK_DLY]=31	6	21	ns
2	$t_{d(RXD0)}$	RXD0 delay compensation at RX_DLYLINE_CTRL[RXD0_DLY]=31	6	21	ns
3	$t_{d(RXD1)}$	RXD1 delay compensation at RX_DLYLINE_CTRL[RXD1_DLY]=31	6	21	ns
4	$t_{d(DELAY_ELEMENT)}$	Incremental delay of each delay line element for RXCLK, RXD0, and RXD1	0.17	0.7	ns

6.12.7.2.1.2 FSIRX Timing Requirements

NO.			MIN	MAX	UNIT
1	$t_{c(RXCLK)}$	Cycle time, RXCLK	20		ns
2	$t_{w(RXCLK)}$	Pulse width, RXCLK low or RXCLK high	$(0.5t_{c(RXCLK)}) - 1$	$(0.5t_{c(RXCLK)}) + 1$	ns
3	$t_{su(RXCLK–RXD)}$	Setup time with respect to RXCLK, applies to both edges of the clock	1.7		ns
4	$t_{h(RXCLK–RXD)}$	Hold time with respect to RXCLK, applies to both edges of the clock	3.8		ns

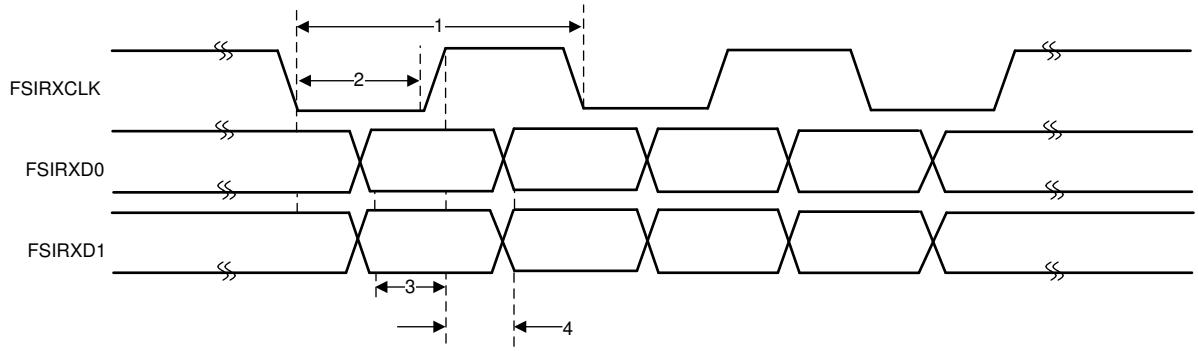

Figure 6-98. FSIRX Timings

Copyright © 2026 Texas Instruments Incorporated

6.12.7.3 FSI SPI Compatibility Mode

The FSI supports a SPI compatibility mode to enable communication with programmable SPI devices. In this mode, the FSI transmits its data in the same manner as a SPI in a single clock configuration mode. While the FSI is able to physically interface with a SPI in this mode, the external device must be able to encode and decode an FSI frame to communicate successfully. This is because the FSI transmits all SPI frame phases with the exception of the preamble and postamble. The FSI provides the same data validation and frame checking as if it was in standard FSI mode, allowing for more robust communication without consuming CPU cycles. The external SPI is required to send all relevant information and can access standard FSI features such as the ping frame watchdog on the FSIRX, frame tagging, or custom CRC values. The list of features of SPI compatibility mode follows:

- Data will transmit on rising edge and receive on falling edge of the clock.
- Only 16-bit word size is supported.
- TXD1 will be driven like an active-low chip-select signal. The signal will be low for the duration of the full frame transmission.
- No receiver chip-select input is required. RXD1 is not used. Data is shifted into the receiver on every active clock edge.
- No preamble or postamble clocks will be transmitted. All signals return to the idle state after the frame phase is finished.
- It is not possible to transmit in the SPI slave configuration because the FSI TXCLK cannot take an external clock source.

6.12.7.3.1 FSITX SPI Signaling Mode Electrical Data and Timing

Section 6.12.7.3.1.1 lists the FSITX SPI signaling mode switching characteristics. Figure 6-99 shows the FSITX SPI signaling mode timings. Special timings are not required for the FSIRX in SPI signaling mode. FSIRX timings listed in Section 6.12.7.2.1.2 are applicable in SPI compatibility mode. Setup and Hold times are only valid on the falling edge of FSIRXCLK because this is the active edge in SPI signaling mode.

6.12.7.3.1.1 FSITX SPI Signaling Mode Switching Characteristics

over operating free-air temperature range (unless otherwise noted)

NO.	PARAMETER		MIN	MAX	UNIT
1	$t_{c(TXCLK)}$	Cycle time, TXCLK	20		ns
2	$t_{w(TXCLK)}$	Pulse width, TXCLK low or TXCLK high	$(0.5t_{c(TXCLK)}) - 1$	$(0.5t_{c(TXCLK)}) + 1$	ns
3	$t_{d(TXCLKH–TXD0)}$	Delay time, Data valid after TXCLK high		3	ns
4	$t_{d(TXD1-TXCLK)}$	Delay time, TXCLK high after TXD1 low	$t_{w(TXCLK)} - 1$		ns
5	$t_{d(TXCLK-TXD1)}$	Delay time, TXD1 high after TXCLK low	$t_{w(TXCLK)} - 1$		ns

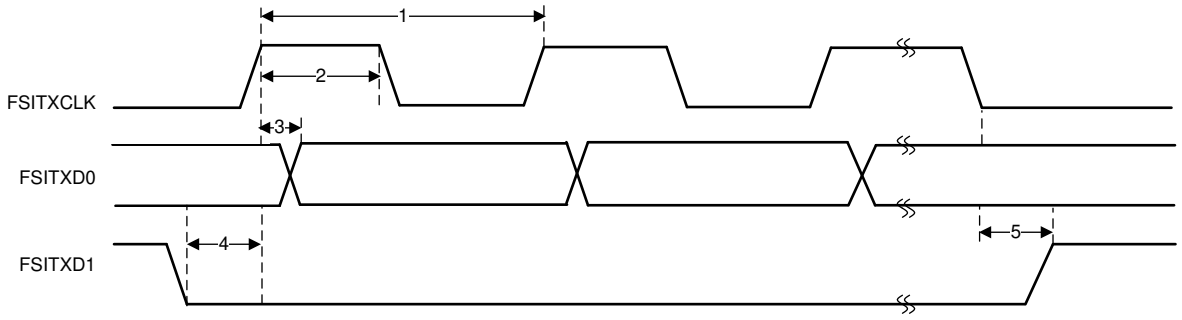

Figure 6-99. FSITX SPI Signaling Mode Timings

7 Detailed Description

7.1 Overview

The TMS320F28004x (F28004x) is a powerful 32-bit floating-point microcontroller unit (MCU) that lets designers incorporate crucial control peripherals, differentiated analog, and nonvolatile memory on a single device.

The real-time control subsystem is based on TI's 32-bit C28x CPU, which provides 100 MHz of signal processing performance. The C28x CPU is further boosted by the new TMU extended instruction set, which enables fast execution of algorithms with trigonometric operations commonly found in transforms and torque loop calculations; and the VCU-I extended instruction set, which reduces the latency for complex math operations commonly found in encoded applications.

The CLA allows significant offloading of common tasks from the main C28x CPU. The CLA is an independent 32-bit floating-point math accelerator that executes in parallel with the CPU. Additionally, the CLA has its own dedicated memory resources and it can directly access the key peripherals that are required in a typical control system. Support of a subset of ANSI C is standard, as are key features like hardware breakpoints and hardware task-switching.

The F28004x supports up to 256KB (128KW) of flash memory divided into two 128KB (64KW) banks, which enables programming and execution in parallel. Up to 100KB (50KW) of on-chip SRAM is also available in blocks of 4KB (2KW) and 16KB (8KW) for efficient system partitioning. Flash ECC, SRAM ECC/parity, and dual-zone security are also supported.

High-performance analog blocks are integrated on the F28004x MCU to further enable system consolidation. Three separate 12-bit ADCs provide precise and efficient management of multiple analog signals, which ultimately boosts system throughput. Seven PGAs on the analog front end enable on-chip voltage scaling before conversion. Seven analog comparator modules provide continuous monitoring of input voltage levels for trip conditions.

The TMS320C2000™ microcontrollers contain industry-leading control peripherals with frequency-independent ePWM/HRPWM and eCAP allow for a best-in-class level of control to the system. The built-in 4-channel SDFM allows for seamless integration of an oversampling sigma-delta modulator across an isolation barrier.

Connectivity is supported through various industry-standard communication ports (such as SPI, SCI, I2C, LIN, and CAN) and offers multiple muxing options for optimal signal placement in a variety of applications. New to the C2000 platform is the fully compliant PMBus. Additionally, in an industry first, the FSI enables high-speed, robust communication to complement the rich set of peripherals that are embedded in the device.

A specially enabled device variant, TMS320F28004xC, allows access to the Configurable Logic Block (CLB) for additional interfacing features and allows access to the secure ROM, which includes a library to enable InstaSPIN-FOC™. See Device Comparison for more information.

Copyright © 2026 Texas Instruments Incorporated

7.2 Functional Block Diagram

Figure 7-1 shows the CPU system and associated peripherals.

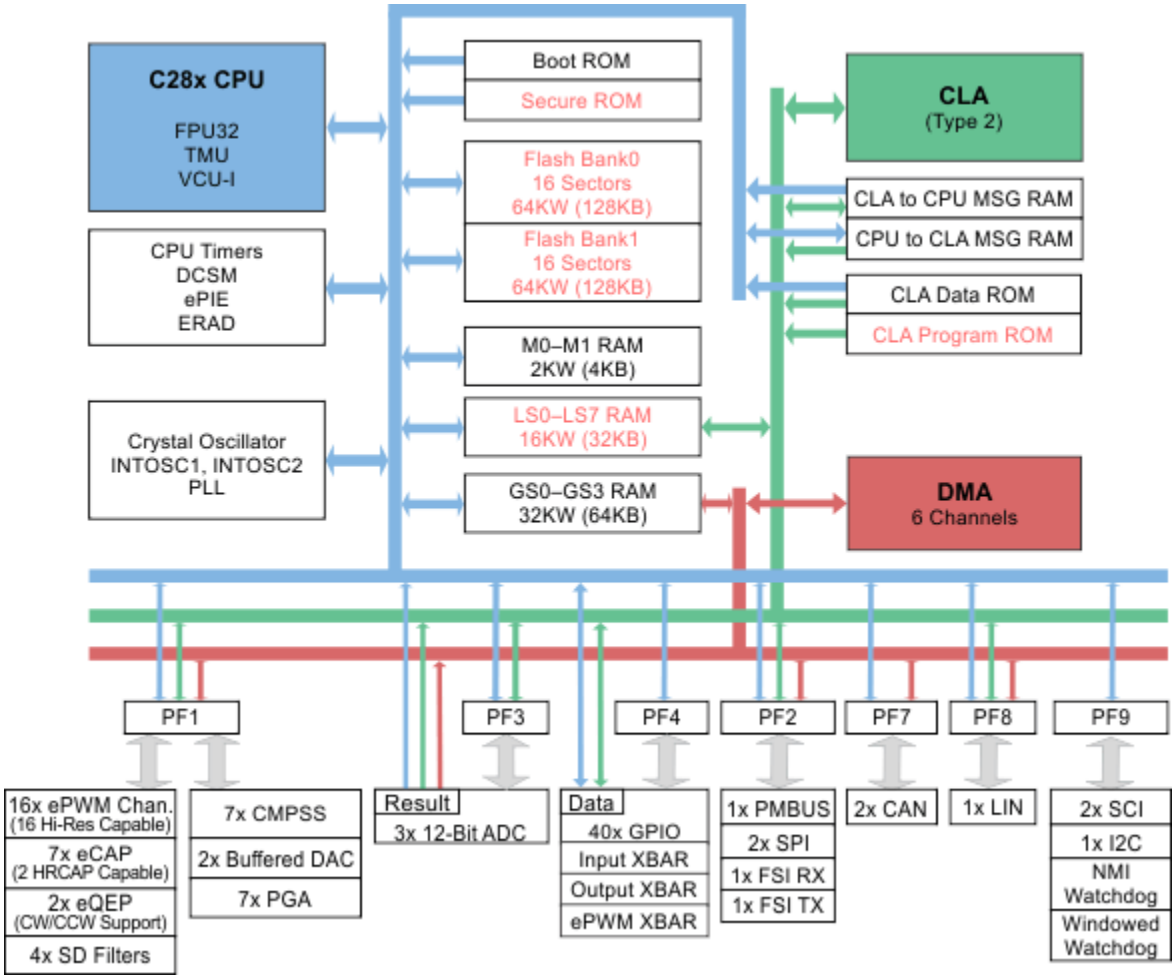

A. Secure memories are shown in red.

Figure 7-1. Functional Block Diagram

7.3 Memory

7.3.1 C28x Memory Map

Table 7-1 describes the C28x memory map. Memories accessible by the CLA or DMA (direct memory access) are also noted. See the Memory Controller Module section of the System Control chapter in the *TMS320F28004x Real-Time Microcontrollers Technical Reference Manual*.

Table 7-1. C28x Memory Map

MEMORY	SIZE	START ADDRESS	END ADDRESS	CLA ACCESS	DMA ACCESS	ECC-CAPABLE	PARITY	MEMORY ACCESS PROTECTION	SECURE
M0 RAM	1K × 16	0x0000 0000	0x0000 03FF			Yes			
M1 RAM	1K × 16	0x0000 0400	0x0000 07FF			Yes			
PieVectTable	512 × 16	0x0000 0D00	0x0000 0EFF						
CLA-to-CPU MSGRAM	128 × 16	0x0000 1480	0x0000 14FF	Read/Write			Yes		
CPU-to-CLA MSGRAM	128 × 16	0x0000 1500	0x0000 157F	Read			Yes		
LS0 RAM	2K × 16	0x0000 8000	0x0000 87FF	Configurable			Yes	Yes	Yes
LS1 RAM	2K × 16	0x0000 8800	0x0000 8FFF	Configurable			Yes	Yes	Yes
LS2 RAM	2K × 16	0x0000 9000	0x0000 97FF	Configurable			Yes	Yes	Yes
LS3 RAM	2K × 16	0x0000 9800	0x0000 9FFF	Configurable			Yes	Yes	Yes
LS4 RAM	2K × 16	0x0000 A000	0x0000 A7FF	Configurable			Yes	Yes	Yes
LS5 RAM	2K × 16	0x0000 A800	0x0000 AFFF	Configurable			Yes	Yes	Yes
LS6 RAM	2K × 16	0x0000 B000	0x0000 B7FF	Configurable			Yes	Yes	Yes
LS7 RAM	2K × 16	0x0000 B800	0x0000 BFFF	Configurable			Yes	Yes	Yes
GS0 RAM	8K × 16	0x0000 C000	0x0000 DFFF		Yes		Yes	Yes	
GS1 RAM	8K × 16	0x0000 E000	0x0000 FFFF		Yes		Yes	Yes	
GS2 RAM	8K × 16	0x0001 0000	0x0001 1FFF		Yes		Yes	Yes	
GS3 RAM	8K × 16	0x0001 2000	0x0001 3FFF		Yes		Yes	Yes	
CAN A Message RAM	2K × 16	0x0004 9000	0x0004 97FF		Yes		Yes		
CAN B Message RAM	2K × 16	0x0004 B000	0x0004 B7FF		Yes		Yes		
Flash Bank 0	64K × 16	0x0008 0000	0x0008 FFFF			Yes		N/A	Yes
Flash Bank 1	64K × 16	0x0009 0000	0x0009 FFFF			Yes		N/A	Yes
Secure ROM	32K × 16	0x003E 8000	0x003E FFFF						Yes
Boot ROM	64K × 16	0x003F 0000	0x003F FFBF						
Vectors	64 × 16	0x003F FFC0	0x003F FFFF						
CLA Data ROM	4K × 16	0x0100 1000	0x0100 1FFF	Read					

7.3.2 Control Law Accelerator (CLA) ROM Memory Map

Table 7-2 shows the CLA data ROM memory map. For information about the CLA program ROM, see the CLA Program ROM (CLAPROMCRC) chapter in the *TMS320F28004x Real-Time Microcontrollers Technical Reference Manual*.

Table 7-2. CLA Data ROM Memory Map

MEMORY	START ADDRESS	END ADDRESS	LENGTH
FFT Tables (Load)	0x0100 1070	0x0100 186F	0x0800
Data (Load)	0x0100 1870	0x0100 1FF9	0x078A
Version (Load)	0x0100 1FFA	0x0100 1FFF	0x0006
FFT Tables (Run)	0x0000 F070	0x0000 F86F	0x0800
Data (Run)	0x0000 F870	0x0000 FFF9	0x078A
Version (Run)	0x0000 FFFA	0x0000 FFFF	0x0006

Copyright © 2026 Texas Instruments Incorporated

7.3.3 Flash Memory Map

On the F28004x devices, up to two flash banks (each 128KB [64KW]) are available. The flash banks are controlled by a single FMC (flash module controller). On the devices in which there is only one flash bank (F280041 and F280040), the code to program the flash should be executed out of RAM. On the devices in which there are two flash banks (F280049, F280048, and F280045), only one bank at a time can be programmed or erased. In the dual-bank devices, the code to program the flash can be executed from one flash bank to erase or program the other flash bank, or the code can be executed from RAM. There should not be any kind of access to the flash bank on which an erase/program operation is in progress. Table 7-3 lists the addresses of flash sectors for F280049, F280048, and F280045. Table 7-4 lists the addresses of flash sectors for F280041 and F280040.

Table 7-3. Addresses of Flash Sectors for F280049, F280048, and F280045

SECTOR	ADDRESS			ECC ADDRESS		
	SIZE	START	END	SIZE	START	END
OTP SECTORS						
TI OTP Bank 0	1K x 16	0x0007 0000	0x0007 03FF	128 x 16	0x0107 0000	0x0107 007F
TI OTP Bank 1	1K x 16	0x0007 0400	0x0007 07FF	128 x 16	0x0107 0080	0x0107 00FF
User configurable DCSM OTP Bank 0	1K x 16	0x0007 8000	0x0007 83FF	128 x 16	0x0107 1000	0x0107 107F
User configurable DCSM OTP Bank 1	1K x 16	0x0007 8400	0x0007 87FF	128 x 16	0x0107 1080	0x0107 10FF
FLASH BANK 0 SECTORS						
Sector 0	4K x 16	0x0008 0000	0x0008 0FFF	512 x 16	0x0108 0000	0x0108 01FF
Sector 1	4K x 16	0x0008 1000	0x0008 1FFF	512 x 16	0x0108 0200	0x0108 03FF
Sector 2	4K x 16	0x0008 2000	0x0008 2FFF	512 x 16	0x0108 0400	0x0108 05FF
Sector 3	4K x 16	0x0008 3000	0x0008 3FFF	512 x 16	0x0108 0600	0x0108 07FF
Sector 4	4K x 16	0x0008 4000	0x0008 4FFF	512 x 16	0x0108 0800	0x0108 09FF
Sector 5	4K x 16	0x0008 5000	0x0008 5FFF	512 x 16	0x0108 0A00	0x0108 0BFF
Sector 6	4K x 16	0x0008 6000	0x0008 6FFF	512 x 16	0x0108 0C00	0x0108 0DFF
Sector 7	4K x 16	0x0008 7000	0x0008 7FFF	512 x 16	0x0108 0E00	0x0108 0FFF
Sector 8	4K x 16	0x0008 8000	0x0008 8FFF	512 x 16	0x0108 1000	0x0108 11FF
Sector 9	4K x 16	0x0008 9000	0x0008 9FFF	512 x 16	0x0108 1200	0x0108 13FF
Sector 10	4K x 16	0x0008 A000	0x0008 AFFF	512 x 16	0x0108 1400	0x0108 15FF
Sector 11	4K x 16	0x0008 B000	0x0008 BFFF	512 x 16	0x0108 1600	0x0108 17FF
Sector 12	4K x 16	0x0008 C000	0x0008 CFFF	512 x 16	0x0108 1800	0x0108 19FF
Sector 13	4K x 16	0x0008 D000	0x0008 DFFF	512 x 16	0x0108 1A00	0x0108 1BFF
Sector 14	4K x 16	0x0008 E000	0x0008 EFFF	512 x 16	0x0108 1C00	0x0108 1DFF
Sector 15	4K x 16	0x0008 F000	0x0008 FFFF	512 x 16	0x0108 1E00	0x0108 1FFF

Copyright © 2026 Texas Instruments Incorporated

Table 7-3. Addresses of Flash Sectors for F280049, F280048, and F280045 (continued)

SECTOR	ADDRESS			ECC ADDRESS		
	SIZE	START	END	SIZE	START	END
FLASH BANK 1 SECTORS						
Sector 0	4K x 16	0x0009 0000	0x0009 0FFF	512 x 16	0x0108 2000	0x0108 21FF
Sector 1	4K x 16	0x0009 1000	0x0009 1FFF	512 x 16	0x0108 2200	0x0108 23FF
Sector 2	4K x 16	0x0009 2000	0x0009 2FFF	512 x 16	0x0108 2400	0x0108 25FF
Sector 3	4K x 16	0x0009 3000	0x0009 3FFF	512 x 16	0x0108 2600	0x0108 27FF
Sector 4	4K x 16	0x0009 4000	0x0009 4FFF	512 x 16	0x0108 2800	0x0108 29FF
Sector 5	4K x 16	0x0009 5000	0x0009 5FFF	512 x 16	0x0108 2A00	0x0108 2BFF
Sector 6	4K x 16	0x0009 6000	0x0009 6FFF	512 x 16	0x0108 2C00	0x0108 2DFF
Sector 7	4K x 16	0x0009 7000	0x0009 7FFF	512 x 16	0x0108 2E00	0x0108 2FFF
Sector 8	4K x 16	0x0009 8000	0x0009 8FFF	512 x 16	0x0108 3000	0x0108 31FF
Sector 9	4K x 16	0x0009 9000	0x0009 9FFF	512 x 16	0x0108 3200	0x0108 33FF
Sector 10	4K x 16	0x0009 A000	0x0009 AFFF	512 x 16	0x0108 3400	0x0108 35FF
Sector 11	4K x 16	0x0009 B000	0x0009 BFFF	512 x 16	0x0108 3600	0x0108 37FF
Sector 12	4K x 16	0x0009 C000	0x0009 CFFF	512 x 16	0x0108 3800	0x0108 39FF
Sector 13	4K x 16	0x0009 D000	0x0009 DFFF	512 x 16	0x0108 3A00	0x0108 3BFF
Sector 14	4K x 16	0x0009 E000	0x0009 EFFF	512 x 16	0x0108 3C00	0x0108 3DFF
Sector 15	4K x 16	0x0009 F000	0x0009 FFFF	512 x 16	0x0108 3E00	0x0108 3FFF

Table 7-4. Addresses of Flash Sectors for F280041 and F280040

SECTOR	ADDRESS			ECC ADDRESS		
	SIZE	START	END	SIZE	START	END
OTP SECTORS						
TI OTP Bank 0	1K x 16	0x0007 0000	0x0007 03FF	128 x 16	0x0107 0000	0x0107 007F
User configurable DCSM OTP Bank 0	1K x 16	0x0007 8000	0x0007 83FF	128 x 16	0x0107 1000	0x0107 107F
FLASH BANK 0 SECTORS						
Sector 0	4K x 16	0x0008 0000	0x0008 0FFF	512 x 16	0x0108 0000	0x0108 01FF
Sector 1	4K x 16	0x0008 1000	0x0008 1FFF	512 x 16	0x0108 0200	0x0108 03FF
Sector 2	4K x 16	0x0008 2000	0x0008 2FFF	512 x 16	0x0108 0400	0x0108 05FF
Sector 3	4K x 16	0x0008 3000	0x0008 3FFF	512 x 16	0x0108 0600	0x0108 07FF
Sector 4	4K x 16	0x0008 4000	0x0008 4FFF	512 x 16	0x0108 0800	0x0108 09FF
Sector 5	4K x 16	0x0008 5000	0x0008 5FFF	512 x 16	0x0108 0A00	0x0108 0BFF
Sector 6	4K x 16	0x0008 6000	0x0008 6FFF	512 x 16	0x0108 0C00	0x0108 0DFF
Sector 7	4K x 16	0x0008 7000	0x0008 7FFF	512 x 16	0x0108 0E00	0x0108 0FFF
Sector 8	4K x 16	0x0008 8000	0x0008 8FFF	512 x 16	0x0108 1000	0x0108 11FF
Sector 9	4K x 16	0x0008 9000	0x0008 9FFF	512 x 16	0x0108 1200	0x0108 13FF
Sector 10	4K x 16	0x0008 A000	0x0008 AFFF	512 x 16	0x0108 1400	0x0108 15FF
Sector 11	4K x 16	0x0008 B000	0x0008 BFFF	512 x 16	0x0108 1600	0x0108 17FF
Sector 12	4K x 16	0x0008 C000	0x0008 CFFF	512 x 16	0x0108 1800	0x0108 19FF
Sector 13	4K x 16	0x0008 D000	0x0008 DFFF	512 x 16	0x0108 1A00	0x0108 1BFF
Sector 14	4K x 16	0x0008 E000	0x0008 EFFF	512 x 16	0x0108 1C00	0x0108 1DFF
Sector 15	4K x 16	0x0008 F000	0x0008 FFFF	512 x 16	0x0108 1E00	0x0108 1FFF

Copyright © 2026 Texas Instruments Incorporated

7.3.4 Peripheral Registers Memory Map

Table 7-5 lists the peripheral registers.

Table 7-5. Peripheral Registers Memory Map

REGISTER	STRUCTURE NAME	START ADDRESS	END ADDRESS	PIPELINE PROTECTION(1)	CLA ACCESS	DMA ACCESS
Peripheral Frame 0						
AdcaResultRegs(2)	ADC_RESULT_REGS	0x0000 0B00	0x0000 0B1F		Yes	Yes
AdcbResultRegs(2)	ADC_RESULT_REGS	0x0000 0B20	0x0000 0B3F		Yes	Yes
AdccResultRegs(2)	ADC_RESULT_REGS	0x0000 0B40	0x0000 0B5F		Yes	Yes
Cla1OnlyRegs	CLA_ONLY_REGS	0x0000 0C00	0x0000 0CFF		Yes - CLA only no CPU access	
CpuTimer0Regs	CPUTIMER_REGS	0x0000 0C00	0x0000 0C07			
CpuTimer1Regs	CPUTIMER_REGS	0x0000 0C08	0x0000 0C0F			
CpuTimer2Regs	CPUTIMER_REGS	0x0000 0C10	0x0000 0C17			
PieCtrlRegs	PIE_CTRL_REGS	0x0000 0CE0	0x0000 0CFF			
Cla1SoftIntRegs	CLA_SOFTINT_REGS	0x0000 0CE0	0x0000 0CFF		Yes - CLA only no CPU access	
DmaRegs	DMA_REGS	0x0000 1000	0x0000 11FF			
Cla1Regs	CLA_REGS	0x0000 1400	0x0000 147F	Yes		
Peripheral Frame 1						
EPwm1Regs	EPWM_REGS	0x0000 4000	0x0000 40FF	Yes	Yes	Yes
EPwm2Regs	EPWM_REGS	0x0000 4100	0x0000 41FF	Yes	Yes	Yes
EPwm3Regs	EPWM_REGS	0x0000 4200	0x0000 42FF	Yes	Yes	Yes
EPwm4Regs	EPWM_REGS	0x0000 4300	0x0000 43FF	Yes	Yes	Yes
EPwm5Regs	EPWM_REGS	0x0000 4400	0x0000 44FF	Yes	Yes	Yes
EPwm6Regs	EPWM_REGS	0x0000 4500	0x0000 45FF	Yes	Yes	Yes
EPwm7Regs	EPWM_REGS	0x0000 4600	0x0000 46FF	Yes	Yes	Yes
EPwm8Regs	EPWM_REGS	0x0000 4700	0x0000 47FF	Yes	Yes	Yes
EQep1Regs	EQEP_REGS	0x0000 5100	0x0000 513F	Yes	Yes	Yes
EQep2Regs	EQEP_REGS	0x0000 5140	0x0000 517F	Yes	Yes	Yes
ECap1Regs	ECAP_REGS	0x0000 5200	0x0000 521F	Yes	Yes	Yes
ECap2Regs	ECAP_REGS	0x0000 5240	0x0000 525F	Yes	Yes	Yes
ECap3Regs	ECAP_REGS	0x0000 5280	0x0000 529F	Yes	Yes	Yes
ECap4Regs	ECAP_REGS	0x0000 52C0	0x0000 52DF	Yes	Yes	Yes
ECap5Regs	ECAP_REGS	0x0000 5300	0x0000 531F	Yes	Yes	Yes
ECap6Regs	ECAP_REGS	0x0000 5340	0x0000 535F	Yes	Yes	Yes
Hrcap6Regs	HRCAP_REGS	0x0000 5360	0x0000 537F	Yes	Yes	Yes
ECap7Regs	ECAP_REGS	0x0000 5380	0x0000 539F	Yes	Yes	Yes
Hrcap7Regs	HRCAP_REGS	0x0000 53A0	0x0000 53BF	Yes	Yes	Yes
Pga1Regs	PGA_REGS	0x0000 5B00	0x0000 5B0F	Yes	Yes	Yes
Pga2Regs	PGA_REGS	0x0000 5B10	0x0000 5B1F	Yes	Yes	Yes
Pga3Regs	PGA_REGS	0x0000 5B20	0x0000 5B2F	Yes	Yes	Yes
Pga4Regs	PGA_REGS	0x0000 5B30	0x0000 5B3F	Yes	Yes	Yes
Pga5Regs	PGA_REGS	0x0000 5B40	0x0000 5B4F	Yes	Yes	Yes
Pga6Regs	PGA_REGS	0x0000 5B50	0x0000 5B5F	Yes	Yes	Yes
Pga7Regs	PGA_REGS	0x0000 5B60	0x0000 5B6F	Yes	Yes	Yes
DacaRegs	DAC_REGS	0x0000 5C00	0x0000 5C0F	Yes	Yes	Yes
DacbRegs	DAC_REGS	0x0000 5C10	0x0000 5C1F	Yes	Yes	Yes
Cmpss1Regs	CMPSS_REGS	0x0000 5C80	0x0000 5C9F	Yes	Yes	Yes
Cmpss2Regs	CMPSS_REGS	0x0000 5CA0	0x0000 5CBF	Yes	Yes	Yes
Cmpss3Regs	CMPSS_REGS	0x0000 5CC0	0x0000 5CDF	Yes	Yes	Yes
Cmpss4Regs	CMPSS_REGS	0x0000 5CE0	0x0000 5CFF	Yes	Yes	Yes
Cmpss5Regs	CMPSS_REGS	0x0000 5D00	0x0000 5D1F	Yes	Yes	Yes
Cmpss6Regs	CMPSS_REGS	0x0000 5D20	0x0000 5D3F	Yes	Yes	Yes
Cmpss7Regs	CMPSS_REGS	0x0000 5D40	0x0000 5D5F	Yes	Yes	Yes

Copyright © 2026 Texas Instruments Incorporated

Table 7-5. Peripheral Registers Memory Map (continued)

REGISTER	STRUCTURE NAME	START ADDRESS	END ADDRESS	PIPELINE PROTECTION[1]	CLA ACCESS	DMA ACCESS
Sdfm1Regs	SDFM_REGS	0x0000 5E00	0x0000 5E7F	Yes	Yes	Yes
Peripheral Frame 2						
SpiaRegs[4]	SPI_REGS	0x0000 6100	0x0000 610F	Yes	Yes	Yes
SpibRegs[4]	SPI_REGS	0x0000 6110	0x0000 611F	Yes	Yes	Yes
PmbusaRegs	PMBUS_REGS	0x0000 6400	0x0000 641F	Yes	Yes	Yes
FsiTxaRegs	FSI_TX_REGS	0x0000 6600	0x0000 667F	Yes	Yes	Yes
FsiRxaRegs	FSI_RX_REGS	0x0000 6680	0x0000 66FF	Yes	Yes	Yes
Peripheral Frame 3						
AdcaRegs	ADC_REGS	0x0000 7400	0x0000 747F	Yes	Yes	
AdcbRegs	ADC_REGS	0x0000 7480	0x0000 74FF	Yes	Yes	
AdccRegs	ADC_REGS	0x0000 7500	0x0000 757F	Yes	Yes	
Peripheral Frame 4						
InputXbarRegs	INPUT_XBAR_REGS	0x0000 7900	0x0000 791F	Yes		
XbarRegs	XBAR_REGS	0x0000 7920	0x0000 793F	Yes		
SyncSocRegs	SYNC_SOC_REGS	0x0000 7940	0x0000 794F	Yes		
DmaClaSrcSelRegs	DMA_CLA_SRC_SEL_REGS	0x0000 7980	0x0000 79BF	Yes		
EPwmXbarRegs	EPWM_XBAR_REGS	0x0000 7A00	0x0000 7A3F	Yes		
OutputXbarRegs	OUTPUT_XBAR_REGS	0x0000 7A80	0x0000 7ABF	Yes		
GpioCtrlRegs	GPIO_CTRL_REGS	0x0000 7C00	0x0000 7EFF	Yes		
GpioDataRegs[3]	GPIO_DATA_REGS	0x0000 7F00	0x0000 7FFF	Yes	Yes	
Peripheral Frame 5						
DevCfgRegs	DEV_CFG_REGS	0x0005 D000	0x0005 D17F	Yes		
ClkCfgRegs	CLK_CFG_REGS	0x0005 D200	0x0005 D2FF	Yes		
CpuSysRegs	CPU_SYS_REGS	0x0005 D300	0x0005 D3FF	Yes		
PeriphAcRegs	PERIPH_AC_REGS	0x0005 D500	0x0005 D6FF	Yes		
AnalogSubsysRegs	ANALOG_SUBSYS_REGS	0x0005 D700	0x0005 D7FF	Yes		
Peripheral Frame 6						
EnhancedDebugGlobalRegs	ERAD_GLOBAL_REGS	0x0005 E800	0x0005 E80A			
EnhancedDebugHWBP1Regs	ERAD_HWBP_REGS	0x0005 E900	0x0005 E907			
EnhancedDebugHWBP2Regs	ERAD_HWBP_REGS	0x0005 E908	0x0005 E90F			
EnhancedDebugHWBP3Regs	ERAD_HWBP_REGS	0x0005 E910	0x0005 E917			
EnhancedDebugHWBP4Regs	ERAD_HWBP_REGS	0x0005 E918	0x0005 E91F			
EnhancedDebugHWBP5Regs	ERAD_HWBP_REGS	0x0005 E920	0x0005 E927			
EnhancedDebugHWBP6Regs	ERAD_HWBP_REGS	0x0005 E928	0x0005 E92F			
EnhancedDebugHWBP7Regs	ERAD_HWBP_REGS	0x0005 E930	0x0005 E937			
EnhancedDebugHWBP8Regs	ERAD_HWBP_REGS	0x0005 E938	0x0005 E93F			
EnhancedDebugCounter1Regs	ERAD_COUNTER_REGS	0x0005 E980	0x0005 E98F			
EnhancedDebugCounter2Regs	ERAD_COUNTER_REGS	0x0005 E990	0x0005 E99F			
EnhancedDebugCounter3Regs	ERAD_COUNTER_REGS	0x0005 E9A0	0x0005 E9AF			
EnhancedDebugCounter4Regs	ERAD_COUNTER_REGS	0x0005 E9B0	0x0005 E9BF			
DcsmBank0Z1Regs	DCSM_BANK0_Z1_REGS	0x0005 F000	0x0005 F022	Yes		
DcsmBank0Z2Regs	DCSM_BANK0_Z2_REGS	0x0005 F040	0x0005 F062	Yes		
DcsmBank1Z1Regs	DCSM_BANK1_Z1_REGS	0x0005 F100	0x0005 F122	Yes		
DcsmBank1Z2Regs	DCSM_BANK1_Z2_REGS	0x0005 F140	0x0005 F162	Yes		
DcsmCommonRegs	DCSM_COMMON_REGS	0x0005 F070	0x0005 F07F	Yes		
DcsmCommon2Regs	DCSM_COMMON_REGS	0x0005 F080	0x0005 F087	Yes		
MemCfgRegs	MEM_CFG_REGS	0x0005 F400	0x0005 F47F	Yes		
AccessProtectionRegs	ACCESS_PROTECTION_REGS	0x0005 F4C0	0x0005 F4FF	Yes		
MemoryErrorRegs	MEMORY_ERROR_REGS	0x0005 F500	0x0005 F53F	Yes		
Flash0CtrlRegs	FLASH_CTRL_REGS	0x0005 F800	0x0005 FAFF	Yes		
Flash0EccRegs	FLASH_ECC_REGS	0x0005 FB00	0x0005 FB3F	Yes		
Peripheral Frame 7						
CanaRegs	CAN_REGS	0x0004 8000	0x0004 87FF	Yes		Yes
CanbRegs	CAN_REGS	0x0004 A000	0x0004 A7FF	Yes		Yes

Copyright © 2026 Texas Instruments Incorporated

Table 7-5. Peripheral Registers Memory Map (continued)

REGISTER	STRUCTURE NAME	START ADDRESS	END ADDRESS	PIPELINE PROTECTION(1)	CLA ACCESS	DMA ACCESS
RomPrefetchRegs	ROM_PREFETCH_REGS	0x0005 E608	0x0005 E609	Yes		
DccRegs	DCC_REGS	0x0005 E700	0x0005 E73F	Yes		
Peripheral Frame 8						
LinaRegs	LIN_REGS	0x0000 6A00	0x0000 6AFF	Yes	Yes	Yes
Peripheral Frame 9						
WdRegs(4)	WD_REGS	0x0000 7000	0x0000 703F	Yes		
NmiIntruptRegs(4)	NMI_INTRUPT_REGS	0x0000 7060	0x0000 706F	Yes		
XintRegs(4)	XINT_REGS	0x0000 7070	0x0000 707F	Yes		
SciaRegs(4)	SCI_REGS	0x0000 7200	0x0000 720F	Yes		
ScibRegs(4)	SCI_REGS	0x0000 7210	0x0000 721F	Yes		
I2caRegs(4)	I2C_REGS	0x0000 7300	0x0000 733F	Yes		

(1) The CPU (not applicable for CLA or DMA) contains a write-followed-by-read protection mode to ensure that any read operation that follows a write operation within a protected address range is executed as written by delaying the read operation until the write is initiated.
(2) ADC result register has no arbitration. Each master can access any ADC result register without any arbitration.
(3) Both CPU and CLA have their own copy of GPIO_DATA_REGS, and hence, no arbitration is required between CPU and CLA. For more details, see the General-Purpose Input/Output (GPIO) chapter of the *TMS320F28004x Real-Time Microcontrollers Technical Reference Manual*.
(4) Registers with 16-bit access only.

Copyright © 2026 Texas Instruments Incorporated

7.3.5 Memory Types

7.3.5.1 Dedicated RAM (Mx RAM)

The CPU subsystem has two dedicated ECC-capable RAM blocks: M0 and M1. These memories are small nonsecure blocks that are tightly coupled with the CPU (that is, only the CPU has access to them).

7.3.5.2 Local Shared RAM (LSx RAM)

RAM blocks which are dedicated to each subsystem and are accessible only to its CPU and CLA, are called local shared RAMs (LSx RAMs).

All LSx RAM blocks have parity. These memories are secure and have the access protection (CPU write/CPU fetch) feature.

By default, these memories are dedicated only to the CPU, and the user could choose to share these memories with the CLA by configuring the MSEL_LSx bit field in the LSxMSEL registers appropriately (see Table 7-6).

Table 7-6. Master Access for LSx RAM
(With Assumption That all Other Access Protections are Disabled)

MSEL_LSx	CLAPGM_LSx	CPU ALLOWED ACCESS	CLA1 ALLOWED ACCESS	COMMENT
00	X	All	–	LSx memory is configured as CPU dedicated RAM.
01	0	All	Data Read Data Write Emulation Data Read Emulation Data Write	LSx memory is shared between CPU and CLA1.
01	1	Emulation Read Emulation Write	Fetch Only Emulation Program Read Emulation Program Write	LSx memory is CLA1 program memory.

7.3.5.3 Global Shared RAM (GSx RAM)

RAM blocks which are accessible from both the CPU and DMA are called global shared RAMs (GSx RAMs). Both the CPU and DMA have full read and write access to these memories. Table 7-7 shows the features of the GSx RAM.

Table 7-7. Global Shared RAM

CPU (FETCH)	CPU (READ)	CPU (WRITE)	CPU.DMA (READ)	CPU.DMA (WRITE)
Yes	Yes	Yes	Yes	Yes

All GSx RAM blocks have parity.

The GSx RAMs have access protection (CPU write/CPU fetch/DMA write).

7.3.5.4 CLA Message RAM (CLA MSGRAM)

These RAM blocks can be used to share data between the CPU and CLA. The CLA has read and write access to the "CLA to CPU MSGRAM." The CPU has read and write access to the "CPU to CLA MSGRAM." The CPU and CLA both have read access to both MSGRAMs.

This RAM has parity.

Copyright © 2026 Texas Instruments Incorporated

7.4 Identification

Table 7-8 lists the Device Identification Registers. Additional information on device identification can be found in the *TMS320F28004x Real-Time Microcontrollers Technical Reference Manual*. See the register descriptions of PARTIDH and PARTIDL for identification of production status (TMX or TMS); availability of InstaSPIN-FOC™; and other device information.

Table 7-8. Device Identification Registers

NAME	ADDRESS	SIZE (x16)	DESCRIPTION	
PARTIDH	0x0005 D00A	2	Device part identification number	
			TMS320F280049	0x01FF 0500
			TMS320F280049C	0x01FF 0500
			TMS320F280048	0x01FE 0500
			TMS320F280048C	0x01FE 0500
			TMS320F280045	0x01FB 0500
			TMS320F280041	0x01F7 0500
			TMS320F280041C	0x01F7 0500
			TMS320F280040	0x01F6 0500
			TMS320F280040C	0x01F6 0500
REVID	0x0005 D00C	2	Silicon revision number	
			Revision 0	0x0000 0000
			Revision A	0x0000 0001
			Revision B	0x0000 0002
			Revision D	0x0000 0004
UID_UNIQUE	0x0007 03CC	2	Unique identification number. This number is different on each individual device with the same PARTIDH. This unique number can be used as a serial number in the application. This number is present only on TMS Revision B devices.	

Copyright © 2026 Texas Instruments Incorporated

7.5 Bus Architecture – Peripheral Connectivity

Table 7-9 lists a broad view of the peripheral and configuration register accessibility from each bus master.

Table 7-9. Bus Master Peripheral Access

PERIPHERALS	DMA	CLA	CPU
SYSTEM PERIPHERALS			
CPU Timers			Y
System Configuration (WD, NMIWD, LPM, Peripheral Clock Gating)			Y
Device Capability, Peripheral Reset			Y
Clock and PLL Configuration			Y
Flash Configuration			Y
Reset Configuration			Y
GPIO Pin Mapping and Configuration			Y
GPIO Data(2)		Y	Y
DMA and CLA Trigger Source Select			Y
CONTROL PERIPHERALS			
ePWM/HRPWM	Y	Y	Y
eCAP/HRCAP	Y	Y	Y
eQEP(1)	Y	Y	Y
SDFM	Y	Y	Y
ANALOG PERIPHERALS			
Analog System Control			Y
ADC Configuration		Y	Y
ADC Result(3)	Y	Y	Y
CMPSS(1)	Y	Y	Y
DAC(1)	Y	Y	Y
PGA(1)	Y	Y	Y
COMMUNICATION PERIPHERALS			
CAN	Y		Y
SPI	Y	Y	Y
I2C			Y
PMBus	Y	Y	Y
SCI			Y
LIN	Y	Y	Y
FSI	Y	Y	Y

(1) These modules are accessible from DMA but cannot trigger a DMA transfer.
(2) The GPIO Data Registers are unique for the CPU and CLA. When the GPIO Pin Mapping Register is configured to assign a GPIO to a particular master, the respective GPIO Data Register will control the GPIO. See the General-Purpose Input/Output (GPIO) chapter of the *TMS320F28004x Real-Time Microcontrollers Technical Reference Manual* for more details.
(3) ADC result registers are duplicated for each master. This allows them to be read with 0-wait states with no arbitration from any or all masters.

Copyright © 2026 Texas Instruments Incorporated

7.6 C28x Processor

The CPU is a 32-bit fixed-point processor which draws from the best features of digital signal processing; reduced instruction set computing (RISC); and microcontroller architectures, firmware, and tool sets.

The features include:

- CPU – modified Harvard architecture and circular addressing. The modified Harvard architecture of the CPU enables instruction and data fetches to be performed in parallel. The CPU can read instructions and data while it writes data simultaneously to maintain the single-cycle instruction operation across the pipeline. The CPU does this over six separate address and data buses.
- RISC – single-cycle instruction execution, register-to-register operations, and modified Harvard architecture.
- Microcontroller – ease of use through an intuitive instruction set, byte packing and unpacking, and bit manipulation.

For more information on CPU architecture and instruction set, see the *TMS320C28x CPU and Instruction Set Reference Guide*. For more information on the C28x Floating-Point Unit (FPU), see the *TMS320C28x Extended Instruction Sets Technical Reference Manual*. All of the features of the C28x documented in the *TMS320C28x CPU and Instruction Set Reference Guide* apply to the C28x+VCU. All features documented in the *TMS320C28x Extended Instruction Sets Technical Reference Manual* apply to the C28x+FPU+VCU. A brief overview of the FPU, TMU, and VCU-Type 0 is provided here.

An overview of the VCU-I instructions can be found in the *TMS320C28x Extended Instruction Sets Technical Reference Manual*.

7.6.1 Embedded Real-Time Analysis and Diagnostic (ERAD)

The ERAD module enhances the debug and system-analysis capabilities of the device. The debug and system-analysis enhancements provided by the ERAD module is done outside of the CPU. The ERAD module consists of the Enhanced Bus Comparator units and the Benchmark System Event Counter units. The Enhanced Bus Comparator units are used to generate hardware breakpoints, hardware watch points, and other output events. The Benchmark System Event Counter units are used to analyze and profile the system. The ERAD module is accessible by the debugger and by the application software, which significantly increases the debug capabilities of many real-time systems, especially in situations where debuggers are not connected. In the TMS320F28004x devices, the ERAD module contains eight Enhanced Bus Comparator units and four Benchmark System Event Counter units.

7.6.2 Floating-Point Unit (FPU)

The C28x plus floating-point (C28x+FPU) processor extends the capabilities of the C28x fixed-point CPU by adding registers and instructions to support IEEE single-precision floating-point operations.

Devices with the C28x+FPU include the standard C28x register set plus an additional set of floating-point unit registers. The additional floating-point unit registers are the following:

- Eight floating-point result registers, RnH (where n = 0–7)
- Floating-point Status Register (STF)
- Repeat Block Register (RB)

All of the floating-point registers, except the RB, are shadowed. This shadowing can be used in high-priority interrupts for fast context save and restore of the floating-point registers.

Copyright © 2026 Texas Instruments Incorporated

7.6.3 Trigonometric Math Unit (TMU)

The TMU extends the capabilities of a C28x+FPU by adding instructions and leveraging existing FPU instructions to speed up the execution of common trigonometric and arithmetic operations listed in Table 7-10.

Table 7-10. TMU Supported Instructions

INSTRUCTIONS	C EQUIVALENT OPERATION	PIPELINE CYCLES
MPY2PIF32 RaH,RbH	a = b * 2pi	2/3
DIV2PIF32 RaH,RbH	a = b / 2pi	2/3
DIVF32 RaH,RbH,RcH	a = b/c	5
SQRTF32 RaH,RbH	a = sqrt(b)	5
SINPUF32 RaH,RbH	a = sin(b*2pi)	4
COSPUF32 RaH,RbH	a = cos(b*2pi)	4
ATANPUF32 RaH,RbH	a = atan(b)/2pi	4
QUADF32 RaH,RbH,RcH,RdH	Operation to assist in calculating ATANPU2	5

No changes have been made to existing instructions, pipeline or memory bus architecture. All TMU instructions use the existing FPU register set (R0H to R7H) to carry out their operations.

7.6.4 Viterbi, Complex Math and CRC Unit (VCU-I)

The C28x with VCU (C28x+VCU) processor extends the capabilities of the C28x fixed-point or floating-point CPU by adding registers and instructions to support the following algorithm types:

- **Viterbi decoding**

  Viterbi decoding is commonly used in baseband communications applications. The viterbi decode algorithm consists of three main parts: branch metric calculations, compare-select (viterbi butterfly), and a traceback operation. Table 7-11 lists a summary of the VCU-I performance for each of these operations.

Table 7-11. Viterbi Decode Performance

VITERBI OPERATION	VCU CYCLES
Branch Metric Calculation (code rate = 1/2)	1
Branch Metric Calculation (code rate = 1/3)	2p
Viterbi Butterfly (add-compare-select)	2 (1)
Traceback per Stage	3 (2)

(1) C28x CPU takes 15 cycles per butterfly.
(2) C28x CPU takes 22 cycles per stage.

- **Cyclic redundancy check (CRC)**

  CRC algorithms provide a straightforward method for verifying data integrity over large data blocks, communication packets, or code sections. The C28x+VCU can perform 8-, 16-, and 32-bit CRCs. For example, the VCU can compute the CRC for a block length of 10 bytes in 10 cycles. A CRC result register contains the current CRC which is updated whenever a CRC instruction is executed.
- **Complex math**
  - Complex math is used in many applications; a few of which are:
  - Fast fourier transform (FFT)

    The complex FFT is used in spread spectrum communications, as well as many signal processing algorithms.
  - Complex filters

    Complex filters improve data reliability, transmission distance, and power efficiency. The C28x+VCU can perform a complex I and Q multiply with coefficients (four multiplies) in a single cycle. In addition, the C28x+VCU can read/write the real and imaginary parts of 16-bit complex data to memory in a single cycle.

Copyright © 2026 Texas Instruments Incorporated

Table 7-12 lists a summary of a few complex math operations enabled by the VCU.

Table 7-12. Complex Math Performance

COMPLEX MATH OPERATION	VCU CYCLES	NOTES
Add or Subtract	1	32 ± 32 = 32-bit (Useful for filters)
Add or Subtract	1	16 ± 32 = 15-bit (Useful for FFT)
Multiply	2p	16 × 16 = 32-bit
Multiply and Accumulate (MAC)	2p	32 + 32 = 32-bit, 16 × 16 = 32-bit
RPT MAC	2p+N	Repeat MAC. Single cycle after the first operation.

Copyright © 2026 Texas Instruments Incorporated

7.7 Control Law Accelerator (CLA)

The CLA Type-2 is an independent, fully programmable, 32-bit floating-point math processor that brings concurrent control-loop execution to the C28x family. The low interrupt-latency of the CLA allows it to read ADC samples "just-in-time." This significantly reduces the ADC sample to output delay to enable faster system response and higher MHz control loops. By using the CLA to service time-critical control loops, the main CPU is free to perform other system tasks such as communications and diagnostics.

The control law accelerator extends the capabilities of the C28x CPU by adding parallel processing. Time-critical control loops serviced by the CLA can achieve low ADC sample to output delay. Thus, the CLA enables faster system response and higher frequency control loops. Using the CLA for time-critical tasks frees up the main CPU to perform other system and communication functions concurrently.

The following is a list of major features of the CLA:

- Clocked at the same rate as the main CPU (SYSCLKOUT).
- An independent architecture allowing CLA algorithm execution independent of the main C28x CPU.
  - Complete bus architecture:
    - Program Address Bus (PAB) and Program Data Bus (PDB)
    - Data Read Address Bus (DRAB), Data Read Data Bus (DRDB), Data Write Address Bus (DWAB), and Data Write Data Bus (DWDB)
  - Independent 8-stage pipeline.
  - 16-bit program counter (MPC)
  - Four 32-bit result registers (MR0 to MR3)
  - Two 16-bit auxiliary registers (MAR0, MAR1)
  - Status register (MSTF)
- Instruction set includes:
  - IEEE single-precision (32-bit) floating-point math operations
  - Floating-point math with parallel load or store
  - Floating-point multiply with parallel add or subtract
  - 1/X and 1/sqrt(X) estimations
  - Data type conversions
  - Conditional branch and call
  - Data load/store operations
- The CLA program code can consist of up to eight tasks or interrupt service routines, or seven tasks and a main background task.
  - The start address of each task is specified by the MVECT registers.
  - No limit on task size as long as the tasks fit within the configurable CLA program memory space.
  - One task is serviced at a time until its completion. There is no nesting of tasks.
  - Upon task completion a task-specific interrupt is flagged within the PIE.
  - When a task finishes the next highest-priority pending task is automatically started.
  - The Type-2 CLA can have a main task that runs continuously in the background, while other high-priority events trigger a foreground task.
- Task trigger mechanisms:
  - C28x CPU through the IACK instruction
  - Task1 to Task8: up to 256 possible trigger sources from peripherals connected to the shared bus on which the CLA assumes secondary ownership.
  - Task8 can be set to be the background task, while Tasks 1 to 7 take peripheral triggers.
- Memory and Shared Peripherals:
  - Two dedicated message RAMs for communication between the CLA and the main CPU.
  - The C28x CPU can map CLA program and data memory to the main CPU space or CLA space.

Figure 7-2 shows the CLA block diagram.

Copyright © 2026 Texas Instruments Incorporated

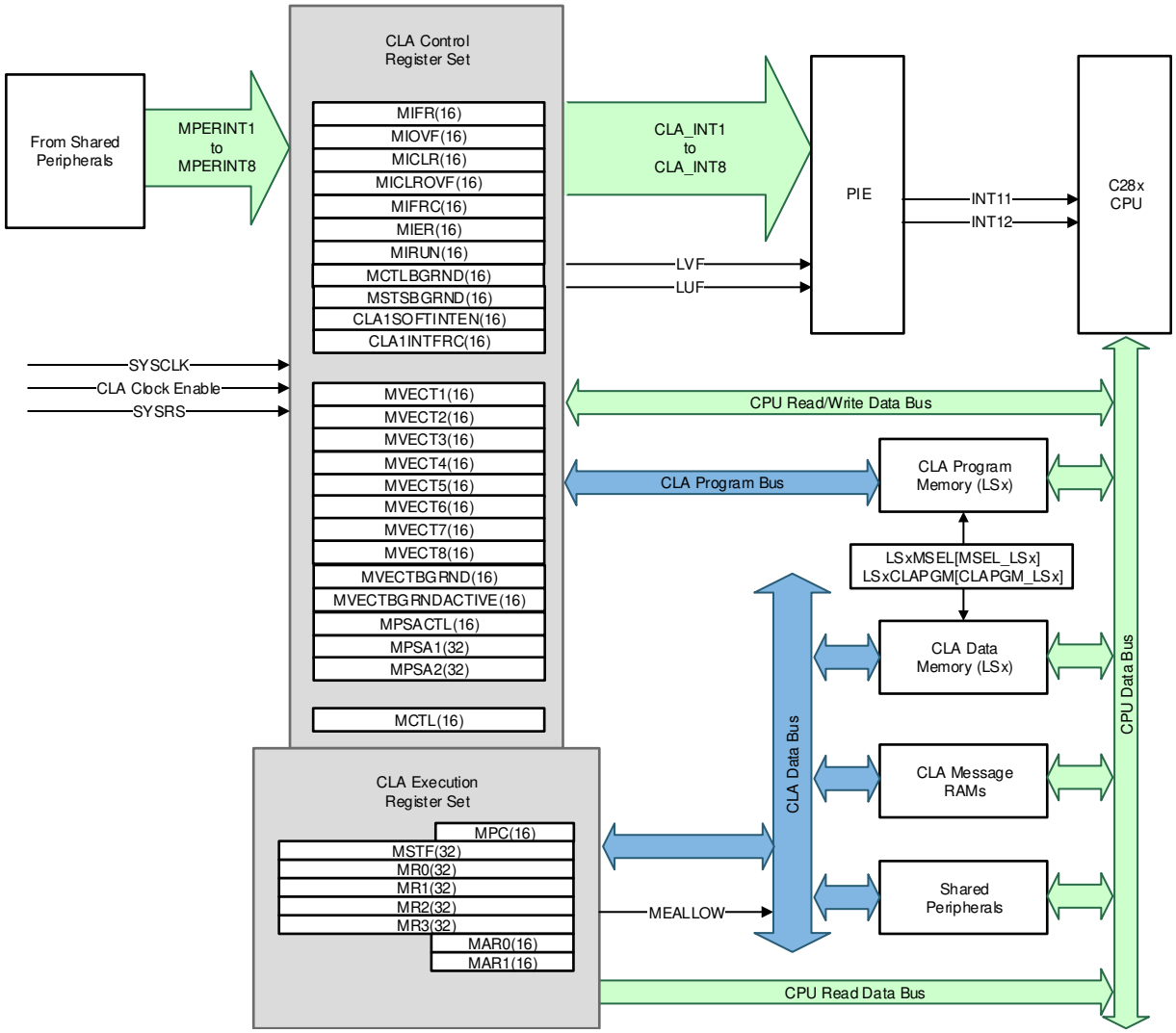

Figure 7-2. CLA Block Diagram

7.8 Direct Memory Access (DMA)

The DMA module provides a hardware method of transferring data between peripherals and/or memory without intervention from the CPU, thereby freeing up bandwidth for other system functions. Additionally, the DMA has the capability to orthogonally rearrange the data as it is transferred as well as “ping-pong” data between buffers. These features are useful for structuring data into blocks for optimal CPU processing.

DMA features include:

- Six channels with independent PIE interrupts
- Peripheral interrupt trigger sources
  - ADC interrupts and EVT signals
  - External Interrupts
  - ePWM SOC signals
  - CPU timers
  - eCAP
  - Sigma-Delta Filter Module
  - SPI transmit and receive
  - CAN transmit and receive
  - LIN transmit and receive
- Data sources and destinations:
  - GSx RAM
  - ADC result registers
  - Control peripheral registers (ePWM, eQEP, eCAP, SDFM)
  - DAC and PGA registers
  - SPI, LIN, CAN, and PMBus registers
- Word Size: 16-bit or 32-bit (SPI limited to 16-bit)
- Throughput: Four cycles per word without arbitration

Figure 7-3 shows a device-level block diagram of the DMA.

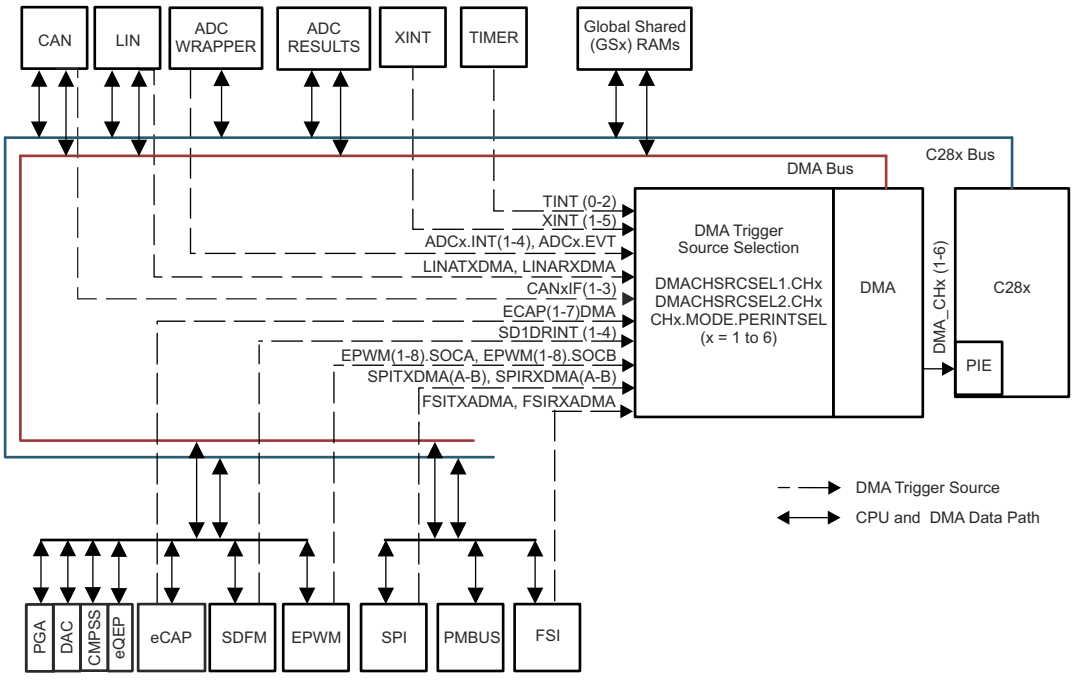

Figure 7-3. DMA Block Diagram

Copyright © 2026 Texas Instruments Incorporated

7.9 Boot ROM and Peripheral Booting

The device boot ROM contains bootloading software. The device ROM has an internal bootloader (programmed by TI) that is executed when the device is powered ON, and each time the device is reset. The bootloader is used as an initial program to load the application on to device RAM through any of the bootable peripherals, or it is configured to start the application in flash, if any.

Table 7-13 lists the default boot mode options. Users have the option to customize the boot modes supported as well as the boot mode select pins.

Table 7-13. Device Default Boot Modes

BOOT MODE	GPIO24 (DEFAULT BOOT MODE SELECT PIN 1)	GPIO32 (DEFAULT BOOT MODE SELECT PIN 0)
Parallel IO	0	0
SCI/Wait boot	0	1
CAN	1	0
Flash	1	1

Table 7-14 lists the possible boot modes supported on the device. The default boot mode pins are GPIO24 (boot mode pin 1) and GPIO32 (boot mode pin 0). Users may choose to have weak pullups for boot mode pins if they use a peripheral on these pins as well, so the pullups can be overdriven. On this device, customers can change the factory default boot mode pins by programming user-configurable Dual Code Security Module (DCSM) OTP locations.

Table 7-14. All Available Boot Modes

BOOT MODE NUMBER	BOOT MODE
0	Parallel IO
1	SCI/Wait boot
2	CAN
3	Flash
4	Wait
5	RAM
6	SPI Master
7	I2C Master
8	PLC

Note

All the peripheral boot modes supported use the first instance of the peripheral module (SCIA, SPIA, I2CA, CANA, and so forth). Whenever these boot modes are referred to in this section, such as SCI boot, it is actually referring to the first module instance, meaning SCI boot on the SCIA port. The same applies to the other peripheral boots.

Copyright © 2026 Texas Instruments Incorporated

7.9.1 Configuring Alternate Boot Mode Select Pins

This section explains how the boot mode select pins can be customized by the user, by programming the BOOTPIN_CONFIG location in user-configurable DCSM OTP. The location in user DCSM OTP is Z1-OTP-BOOTPIN-CONFIG. When debugging, EMU-BOOTPIN-CONFIG is the emulation equivalent of Z1-OTP-BOOTPIN-CONFIG, and can be programmed to experiment with different boot modes without writing to OTP. The device can be programmed to use 0, 1, 2, or 3 boot mode select pins as needed.

Table 7-15. BOOTPIN_CONFIG Bit Fields

BIT	NAME	DESCRIPTION
31–24	Key	Write 0x5A to these 8 bits to tell the boot ROM code that the bits in this register are valid
23–16	Boot Mode Select Pin 2 (BMSP2)	See BMPS0 description
15–8	Boot Mode Select Pin 1 (BMSP1)	See BMSP0 description
7–0	Boot Mode Select Pin 0 (BMSP0)	Set to the GPIO pin to be used during boot (up to 255). 0x0 = GPIO0; 0x01 = GPIO1 and so on 0xFF is invalid and selects the factory default chosen BMSP0, if all other BMSPs are also set to 0xFF. If any other BMSPs are not set to 0xFF, then setting a BMSP to 0xFF will disable that particular BMSP.

Note

The following GPIOs cannot be used as a BMSP. If selected for a particular BMSP, the boot ROM automatically selects the factory default GPIO (the factory default for BMSP2 is 0xFF, which disables the BMSP).

- GPIO 20 to 23
- GPIO 36
- GPIO 38
- GPIO 60 to 223

Table 7-16. Stand-alone Boot Mode Select Pin Decoding

BOOTPIN_CONFIG KEY	BMSP0	BMSP1	BMSP2	REALIZED BOOT MODE
!= 0x5A	Don't Care	Don't Care	Don't Care	Boot as defined by the factory default BMSPs (GPIO24, GPIO32)
= 0x5A	0xFF	0xFF	0xFF	Boot as defined in the boot table for boot mode 0 (All BMSPs disabled)
	Valid GPIO	0xFF	0xFF	Boot as defined by the value of BMSP0 (BMSP1 and BMSP2 disabled)
	0xFF	Valid GPIO	0xFF	Boot as defined by the value of BMSP1 (BMSP0 and BMSP2 disabled)
	0xFF	0xFF	Valid GPIO	Boot as defined by the value of BMSP2 (BMSP0 and BMSP1 disabled)
	Valid GPIO	Valid GPIO	0xFF	Boot as defined by the values of BMSP0 and BMSP1 (BMSP2 disabled)
	Valid GPIO	0xFF	Valid GPIO	Boot as defined by the values of BMSP0 and BMSP2 (BMSP1 disabled)
	0xFF	Valid GPIO	Valid GPIO	Boot as defined by the values of BMSP1 and BMSP2 (BMSP0 disabled)
	Valid GPIO	Valid GPIO	Valid GPIO	Boot as defined by the values of BMSP0, BMPS1, and BMSP2

Copyright © 2026 Texas Instruments Incorporated

7.9.2 Configuring Alternate Boot Mode Options

This section explains how to configure the boot definition table, BOOTDEF, for the device and the associated boot options. The 64-bit location is in user-configurable DCSM OTP in the Z1-OTP-BOOTDEF-LOW and Z1-OTP-BOOTDEF-HIGH locations. When debugging, EMU-BOOTDEF-LOW and EMU-BOOTDEF-HIGH are the emulation equivalents of Z1-OTP-BOOTDEF-LOW and Z1-OTP-BOOTDEF-HIGH, and can be programmed to experiment with different boot mode options without writing to OTP. The range of customization to the boot definition table depends on how many boot mode select pins are being used. For examples on how to use the BOOTPIN_CONFIG and BOOTDEF values, see the Boot Mode Example Use Cases section of the ROM Code and Peripheral Booting chapter in the *TMS320F28004x Real-Time Microcontrollers Technical Reference Manual*.

Table 7-17. BOOTDEF Bit Fields

BOOTDEF NAME	BYTE POSITION	NAME	DESCRIPTION
BOOT_DEF0	7–0	BOOT_DEF0 Mode and Options	Set the boot mode and boot mode options. This can include changing the GPIOs for a particular boot peripheral or specifying a different flash entry point. Any unsupported boot mode will cause the device to reset. See *GPIO Assignments* for valid BOOTDEF values.
BOOT_DEF1	15–8	BOOT_DEF1 Mode and Options	Refer to BOOT_DEF0 descriptions.
BOOT_DEF2	23–16	BOOT_DEF2 Mode and Options	
BOOT_DEF3	31–24	BOOT_DEF3 Mode and Options	
BOOT_DEF4	39–32	BOOT_DEF4 Mode and Options	
BOOT_DEF5	47–40	BOOT_DEF5 Mode and Options	
BOOT_DEF6	55–48	BOOT_DEF6 Mode and Options	
BOOT_DEF7	63–56	BOOT_DEF7 Mode and Options	

7.9.3 GPIO Assignments

This section details the GPIOs and boot options used for each boot mode set in BOOT_DEFx located at Z1-OTP-BOOTDEF-LOW and Z1-OTP-BOOTDEF-HIGH. See *Configuring Alternate Boot Mode Select Pins* on how to manipulate BOOT_DEFx. When selecting a boot mode option, verify that the necessary pins are available in the pin mux options for the specific device package being used.

Table 7-18. SCI Boot Options

OPTION	BOOTDEFx VALUE	SCIATX GPIO	SCIARX GPIO
0 (default)	0x01	GPIO29	GPIO28
1	0x21	GPIO16	GPIO17
2	0x41	GPIO8	GPIO9
3	0x61	GPIO48	GPIO49
4	0x81	GPIO24	GPIO25

Note

Pullups are enabled on the SCIATX and SCIARX pins.

Copyright © 2026 Texas Instruments Incorporated

Table 7-19. CAN Boot Options

OPTION	BOOTDEFx VALUE	CANTXA GPIO	CANRXA GPIO
0 (default)	0x02	GPIO32	GPIO33
1	0x22	GPIO4	GPIO5
2	0x42	GPIO31	GPIO30
3	0x62	GPIO37	GPIO35

Note

Pullups are enabled on the CANTXA and SCIARX pins.

Table 7-20. Flash Boot Options

OPTION	BOOTDEFx VALUE	FLASH ENTRY POINT (ADDRESS)	FLASH BANK, SECTOR
0 (default)	0x03	Flash – Default Option 1 (0x00080000)	Bank 0, Sector 0
1	0x23	Flash – Option 2 (0x0008EFF0)	Bank 0, Sector 14
2	0x43	Flash – Option 3 (0x00090000)	Bank 1, Sector 0
3	0x63	Flash – Option 4 (0x0009EFF0)	Bank 1, Sector 14

Table 7-21. Wait Boot Options

OPTION	BOOTDEFx VALUE	WATCHDOG STATUS
0	0x04	Enabled
1	0x24	Disabled

Table 7-22. SPI Boot Options

OPTION	BOOTDEFx VALUE	SPIA_SIMO	SPIA_SOMI	SPIA_CLK	SPIA_STE
1	0x26	GPIO8	GPIO10	GPIO9	GPIO11
2	0x46	GPIO54	GPIO55	GPIO56	GPIO57
3	0x66	GPIO16	GPIO17	GPIO56	GPIO57
4	0x86	GPIO8	GPIO17	GPIO9	GPIO11

Note

Pullups are enabled on the SPIA_SIMO, SPIA_SOMI, SPIA_CLK, and SPIA_STE pins.

Copyright © 2026 Texas Instruments Incorporated

Table 7-23. I2C Boot Options

OPTION	BOOTDEFx VALUE	SDAA GPIO	SCLA GPIO
0	0x07	GPIO32	GPIO33
1	0x47	GPIO26	GPIO27
2	0x67	GPIO42	GPIO43

Note

Pullups are enabled on the SDAA and SCLA pins.

Table 7-24. Parallel Boot Options

OPTION	BOOTDEFx VALUE	D0 to D7 GPIO	DSP CONTROL GPIO	HOST CONTROL GPIO
0 (default)	0x00	GPIO0 to GPIO7	GPIO16	GPIO11

Note

Pullups are enabled on GPIO0 to GPIO7.

Table 7-25. RAM Boot Options

OPTION	BOOTDEFx VALUE	RAM ENTRY POINT ADDRESS
0	0x05	0x00000000

Copyright © 2026 Texas Instruments Incorporated

7.10 Dual Code Security Module

The dual code security module (DCSM) prevents access to on-chip secure memories. The term “secure” means access to secure memories and resources is blocked. The term “unsecure” means access is allowed; for example, through a debugging tool such as Code Composer Studio™ (CSS).

The code security mechanism offers protection for two zones, Zone 1 (Z1) and Zone 2 (Z2). The security implementation for both the zones is identical. Each zone has its own dedicated secure resource (OTP memory and secure ROM) and allocated secure resource (CLA, LSx RAM, and flash sectors).

The security of each zone is ensured by its own 128-bit password (CSM password). The password for each zone is stored in an OTP memory location based on a zone-specific link pointer. The link pointer value can be changed to program a different set of security settings (including passwords) in OTP.

Code Security Module Disclaimer

THE CODE SECURITY MODULE (CSM) INCLUDED ON THIS DEVICE WAS DESIGNED TO PASSWORD PROTECT THE DATA STORED IN THE ASSOCIATED MEMORY AND IS WARRANTED BY TEXAS INSTRUMENTS (TI), IN ACCORDANCE WITH ITS STANDARD TERMS AND CONDITIONS, TO CONFORM TO TI'S PUBLISHED SPECIFICATIONS FOR THE WARRANTY PERIOD APPLICABLE FOR THIS DEVICE.

TI DOES NOT, HOWEVER, WARRANT OR REPRESENT THAT THE CSM CANNOT BE COMPROMISED OR BREACHED OR THAT THE DATA STORED IN THE ASSOCIATED MEMORY CANNOT BE ACCESSED THROUGH OTHER MEANS. MOREOVER, EXCEPT AS SET FORTH ABOVE, TI MAKES NO WARRANTIES OR REPRESENTATIONS CONCERNING THE CSM OR OPERATION OF THIS DEVICE, INCLUDING ANY IMPLIED WARRANTIES OF MERCHANTABILITY OR FITNESS FOR A PARTICULAR PURPOSE.

IN NO EVENT SHALL TI BE LIABLE FOR ANY CONSEQUENTIAL, SPECIAL, INDIRECT, INCIDENTAL, OR PUNITIVE DAMAGES, HOWEVER CAUSED, ARISING IN ANY WAY OUT OF YOUR USE OF THE CSM OR THIS DEVICE, WHETHER OR NOT TI HAS BEEN ADVISED OF THE POSSIBILITY OF SUCH DAMAGES. EXCLUDED DAMAGES INCLUDE, BUT ARE NOT LIMITED TO LOSS OF DATA, LOSS OF GOODWILL, LOSS OF USE OR INTERRUPTION OF BUSINESS OR OTHER ECONOMIC LOSS.

Copyright © 2026 Texas Instruments Incorporated

7.11 Watchdog

The watchdog module is the same as the one on previous TMS320C2000 devices, but with an optional lower limit on the time between software resets of the counter. This windowed countdown is disabled by default, so the watchdog is fully backward-compatible.

The watchdog generates either a reset or an interrupt. It is clocked from the internal oscillator with a selectable frequency divider.

Figure 7-4 shows the various functional blocks within the watchdog module.

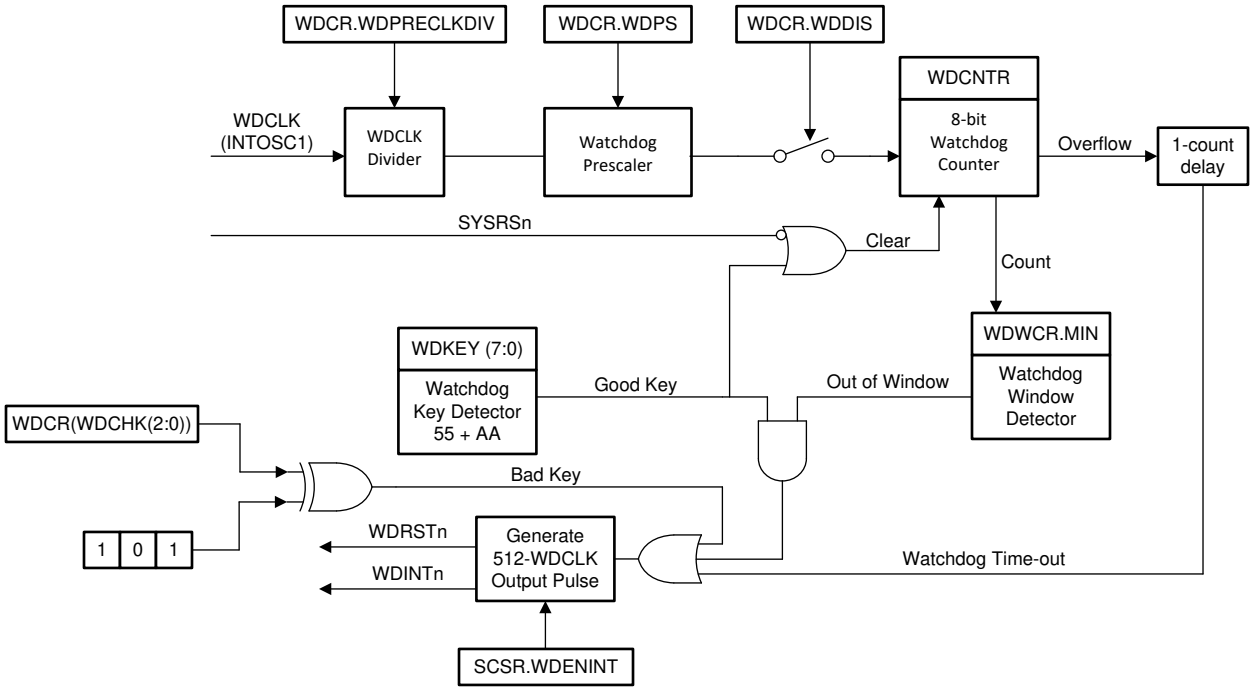

Figure 7-4. Windowed Watchdog

7.12 Configurable Logic Block (CLB)

The C2000 configurable logic block (CLB) is a collection of blocks that can be interconnected using software to implement custom digital logic functions or enhance existing on-chip peripherals. The CLB is able to enhance existing peripherals through a set of crossbar interconnections, which provide a high level of connectivity to existing control peripherals such as enhanced pulse width modulators (ePWM), enhanced capture modules (eCAP), and enhanced quadrature encoder pulse modules (eQEP). The crossbars also allow the CLB to be connected to external GPIO pins. In this way, the CLB can be configured to interact with device peripherals to perform small logical functions such as comparators, or to implement custom serial data exchange protocols. Through the CLB, functions that would otherwise be accomplished using external logic devices can now be implemented inside the MCU.

The CLB peripheral is configured through the CLB tool. For more information on the CLB tool, available examples, application reports and users guide, please refer to the following location in your C2000Ware package (C2000Ware_2_00_00_03 and higher):

- **C2000WARE_INSTALL_LOCATION\utilities\clb_tool\clb_syscfg\doc**
- *CLB Tool User's Guide*
- *Designing With the C2000™ Configurable Logic Block (CLB) Application Report*
- *How to Migrate Custom Logic From an FPGA/CPLD to C2000™ Microcontrollers Application Report*

The CLB module and its interconnects are shown in Figure 7-5.

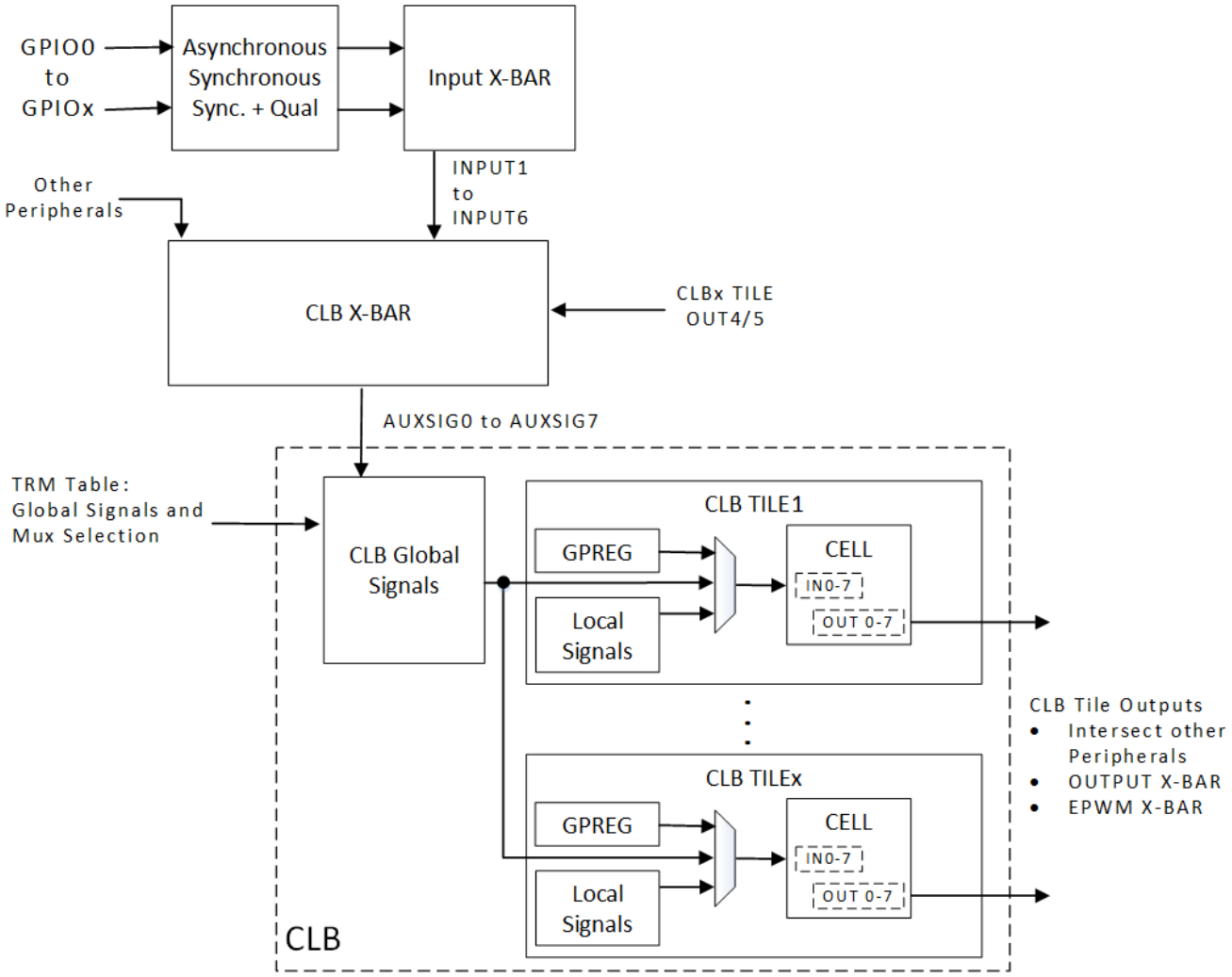

Figure 7-5. CLB Overview

Copyright © 2026 Texas Instruments Incorporated

Absolute encoder protocol interfaces are now provided as Position Manager solutions in the C2000Ware MotorControl SDK. Configuration files, application programmer interface (API), and use examples for such solutions are provided with C2000Ware MotorControl SDK. In some solutions, the TI-configured CLB is used with other on-chip resources, such as the SPI port or the C28x CPU, to perform more complex functionality. See Table 4-1 for the devices that support the CLB feature.

Copyright © 2026 Texas Instruments Incorporated

7.13 Functional Safety

Functional Safety-Compliant products are developed using an ISO 26262/IEC 61508-compliant hardware development process that is independently assessed and certified to meet ASIL D/SIL 3 systematic capability (see certificate). The TMS320F28004x has been certified to meet a component-level random hardware capability of ASIL B (see certificate).

A functional safety manual that describes all of the hardware and software functional safety mechanisms is available. See the *Functional Safety Manual for TMS320F28004x*.

A detailed, tunable, fault-injected, quantitative FMEDA that enables the calculation of random hardware metrics—as outlined in the International Organization for Standardization ISO 26262 and the International Electrotechnical Commission IEC 61508 for automotive and industrial applications, respectively—is also available. This tunable FMEDA must be requested; see the *C2000™ Safety Package for Automotive and Industrial Real-Time Microcontrollers User's Guide*.

- A white paper outlining the value (or benefit) of a tunable FMEDA is available. See the *Functional Safety: A tunable FMEDA for C2000™ MCUs* publication.
- Parts 1 and 2 of a five-part FMEDA tuning training are available. See the C2000™ functional safety tunable FMEDA training page. Parts 3, 4, and 5 are packaged with the tunable FMEDA, and must be requested.

Three diagnostic libraries designed for the F28004x series of devices are available to aid in the development of functionally safe systems—the C28x Self-Test Library (C28x_STL), CLA Self-Test Library (CLA_STL), and Software Diagnostic Library (SDL). The C28x_STL and CLA_STL provide software tests of the C28x CPU and the CLA, respectively, and have been independently assessed and certified. They are available upon request only, see the *C2000™ Safety Package for Automotive and Industrial Real-Time Microcontrollers User's Guide*. The SDL is a set of reference software providing example implementations of several safety mechanisms described in the device safety manual, such as software tests of SRAMs, software tests of Missing Clock Detect functionality, clock integrity checks using CPU Timers, and several other key features. The SDL is provided as part of C2000Ware.

C2000 real-time MCUs are also equipped with a TI release validation-based C28x and CLA Compiler Qualification Kit (CQKIT), which is available for free and may be requested at the Safety compiler qualification kit web page.

Additional details about how to develop functionally safe systems with C2000 real-time MCUs can be found in the following documents:

- *Automotive Functional Safety for C2000™ Real-Time Microcontrollers* summarizes the available functional safety products, documentation, software, and support available for aiding in the ISO 26262 certification process.
- *Error Detection in SRAM Application Report* provides technical information about the nature of the SRAM bit cell and bit array, as well as the sources of SRAM failures. It then presents methods for managing memory failures in electronic systems. This discussion is intended for electronic system developers or integrators who are interested in improving the robustness of the embedded SRAM.
- *C2000™ CPU Memory Built-In Self-Test* describes embedded memory validation using the C28x central processing unit (CPU) during an active control loop. It discusses system challenges to memory validation as well as the different solutions provided by C2000 devices and software. Finally, it presents the applicable Software Diagnostic Library features for memory testing.

Copyright © 2026 Texas Instruments Incorporated

8 Applications, Implementation, and Layout

Note

Information in the following applications sections is not part of the TI component specification, and TI does not warrant its accuracy or completeness. TI's customers are responsible for determining suitability of components for their purposes, as well as validating and testing their design implementation to confirm system functionality.

The *Hardware Design Guide for F2800x C2000™ Real-Time MCU Series Application Note* is an essential guide for hardware developers using C2000 devices, and helps to streamline the design process while mitigating the potential for faulty designs. Key topics discussed include: power requirements; general-purpose input/output (GPIO) connections; analog inputs and ADC; clocking generation and requirements; and JTAG debugging among many others.

8.1 Key Device Features

Table 8-1. Key Device Features

MODULE	FEATURE	SYSTEM BENEFIT
PROCESSING		
Real-time control CPUs	Up to 200 MIPS C28x: 100 MIPS CLA: 100 MIPS Flash: Up to 256KB RAM : Up to 100KB 32-bit Floating-Point Unit (FPU32) Trigonometric Math Unit (TMU) Vertibi Complex Math Unit (VCU)	TI's 32-bit C28x DSP core, provides 100 MHz of signal-processing performance for floating- or fixed-point code running from either on-chip flash or SRAM Provides 100 MHz of signal-processing performance for floating- or fixed-point code running from either on-chip flash or SRAM. **FPU32:** Native hardware support for IEEE-754 single-precision floating-point operations **TMU:** Accelerators used to speed up execution of trigonometric and arithmetic operations for faster computation (such as PLL and DQ transform) optimized for control applications. Helps in achieving faster control loops, resulting in higher efficiency and better component sizing. Special instructions to support nonlinear PID control algorithms **VCU:** Reduces the latency for complex math operations commonly found in encoded applications Real-time Benchmarks Showcasing C2000™ControlMCU's Optimized Signal Chain
SENSING		
Analog-to-Digital Converter (ADC) (12-bit)	Up to 3 ADC modules 3.45 MSPS Up to 21 channels	ADC provides precise and concurrent sampling of all three-phase currents and DC bus with zero jitter. ADC post-processing – On-chip hardware reduces ADC ISR complexity and shortens current loop cycles. More ADCs help in multiphase applications. Provide better effective MSPS (oversampling) and typical ENOB for better control-loop performance.

Copyright © 2026 Texas Instruments Incorporated

Table 8-1. Key Device Features (continued)

MODULE	FEATURE	SYSTEM BENEFIT
Comparator Subsystem (CMPSS)	**CMPSS** 2 windowed comparator Dual 12-bit DACs DAC ramp generation Low DAC output on external pin Digital filters 60-ns detection to trip time Slope compensation	**System protection without false alarms:** Comparator Subsystem (CMPSS) modules are useful for applications such as peak-current mode control, switched-mode power, power factor correction, and voltage trip monitoring. PWM trip-triggering and removal of unwanted noise are easy with blanking window and filtering features provided with the analog comparator subsystems. Provides better control accuracy. No need for further CPU configuration to control the PWM with the comparator and 12-bit DAC (CMPSS). Enables protection and control using the same pin.
Enhanced Quadrature Encoder Pulse (eQEP)	2 eQEP modules	Used for direct interface with a linear or rotary incremental encoder to get position, direction, and speed information from a rotating machine used in a high-performance motion and position-control system. Also can be used in other applications to count input pulses from an external device (such as a sensor).
Enhanced Capture (eCAP) / High Resolution Enhanced Capture (HRCAP)	7 eCAP modules (2 with HRCAP capability) Measures elapsed time between events (up to 4 time-stamped events). Connects to any GPIO through the input X-BAR. When not used in capture mode, the eCAP module can be configured as a single-channel PWM output (APWM).	**Applications for eCAP include:** Speed measurements of rotating machinery (for example, toothed sprockets sensed through Hall sensors) Elapsed time measurements between position sensor pulses Period and duty cycle measurements of pulse train signals Decoding current or voltage amplitude derived from duty-cycle encoded current/voltage sensors
	2 HRCAP channels Provides the capability to measure the width of external pulses with a typical resolution of 300 ps.	**Applications for HRCAP include:** High-resolution period and duty-cycle measurements of pulse train cycles Instantaneous speed measurements Instantaneous frequency measurements Voltage measurements across an isolation boundary Distance/sonar measurement and scanning Flow measurements Capacitive touch applications

Copyright © 2026 Texas Instruments Incorporated

Table 8-1. Key Device Features (continued)

MODULE	FEATURE	SYSTEM BENEFIT
ACTUATION		
Enhanced Pulse Width Modulation (ePWM) / High-Resolution Pulse Width Modulation (HRPWM)	Up to 16 ePWM channels Ability to generate high-side/low-side PWMs with deadband Supports Valley switching (ability to switch PWM output at valley point) and features like blanking window	Flexible PWM waveform generation with best power topology coverage. Shadowed deadband and shadowed action qualifier enable adaptive PWM generation and protection for improved control accuracy and reduced power loss. Enables improvement in Power Factor (PF) and Total Harmonic Distortion (THD), which is especially relevant in Power Factor Correction (PFC) applications. Improves light load efficiency.
	HRPWM capability: All the 16 channels provide high-resolution capability (150 ps) Provides 150-ps steps for duty cycle, period, deadband, and phase offsets for 99% greater precision	Beneficial for accurate control and enables better-performance high-frequency power conversion. Achieves cleaner waveforms and avoids oscillations/limit cycle at output.
	One-shot and global reload feature	Critical for variable-frequency and multiphase DC-DC applications and helps in attaining high-frequency control loops (>2 MHz). Enables control of interleaved LLC topologies at high frequencies
	Independent PWM action on a Cycle-by-Cycle (CBC) trip event and an One-Shot Trip (OST) trip event	Provides cycle-by-cycle protection and complete shutoff of PWM under fault condition. Helps implement multiphase PFC or DC-DC control.
	Load on SYNC (support for shadow-to-active load on a SYNC event)	Enables variable-frequency applications (allows LLC control in power conversion).
	Ability to shut down the PWMs without software intervention (no ISR latency)	Fast protection under fault condition
	Delayed Trip Functionality	Helps implement the deadband with Peak Current Mode Control (PCMC) Phase- Shifted Full Bride (PSFB) DC-DC easily without occupying much CPU resources (even on trigger events based on comparator, trip, or sync-in events).
	Deadband Generator (DB) submodule	Prevents simultaneous ON conditions of High and Low side gates by adding programmable delay to rising (RED) and falling (FED) PWM signal edges.
	Flexible PWM Phase Relationships and Timer Synchronization	Each ePWM module can be synchronized with other ePWM modules or other peripherals. Keeps PWM edges in synchronization with each other or with certain events. Supports flexible ADC scheduling with specific sampling window in synchronization with power device switching.
CONNECTIVITY		
Serial Peripheral Interface (SPI)	2 high-speed SPI port	Supports 25 MHz
Serial Communication Interface (SCI)	2 SCI (UART) modules	Interfaces with controllers
Local Interconnect Network (LIN)	1 LIN	Provides a low-cost solution where the bandwidth and fault tolerance of a Controller Area Network (CAN) are not required. Can also be used as SCI to communication with other controllers.
Controller Area Network (CAN/ DCAN)	1 DCAN module	Provides compatibility with classic CAN modules
Inter-Integrated Circuit (I2C)	1 I2C modules	Interfaces with external EEPROMs, sensors, or controllers

Copyright © 2026 Texas Instruments Incorporated

Table 8-1. Key Device Features (continued)

MODULE	FEATURE	SYSTEM BENEFIT
Power-Management Bus (PMBus)	1 PMBus module Compliance with the SMI Forum PMBus Specification (Part I v1.0 and Part II v1.1)	Seamless HW-based host communication
Fast Serial Interface (FSI) with a transmitter and receiver	Up to 1 FSI transmitters and 1 FSI receivers Serial communication peripheral capable of reliable high-speed communication (up to 100 MHz) across isolation devices	Fast serial interface (FSI) can be useful for low-pin count, high-speed communication even across isolation boundary at up to 100Mbps.
OTHER SYSTEM FEATURES		
Security enhancers	Dual-zone Code Security Module (DCSM) Watchdog Write Protection on Register Missing Clock Detection Logic (MCD) Error Correction Code (ECC) and parity	**DCSM:** Prevents duplication and reverse-engineering of proprietary code **Watchdog:** Generates reset if CPU gets stuck in endless loops of execution **Write Protection on Registers:** LOCK protection on system configuration registers Protection against spurious CPU writes **MCD:** Automatic clock failure detection **ECC and parity:** Single-bit error correction and double-bit error detection
Crossbars (XBARs)	Provides flexibility to connect device inputs, outputs, and internal resources in a variety of configurations. • Input X-BAR • Output X-BAR • ePWM X-BAR • CLB X-BAR	**Enhances hardware design versatility:** **Input X-BAR:** Routes signals from any GPIO to multiple IP blocks within the chip **Output XBAR:** Routes internal signals onto designated GPIO pins **ePWM X-BAR:** Routes internal signals from various IP blocks to EPWM **CLB X-BAR:** Allows user to bring signals from various IP blocks to CLB

8.2 Application Information

8.2.1 Typical Application

The *Typical Applications* section details *some* applications of this device. For a more extensive list of applications, see the *Applications* section of this data sheet.

8.2.1.1 Server or Telecom Power Supply Unit (PSU)

A server or telecom power supply unit (PSU) consists of a power factor correction (PFC) stage and a DC-DC converter stage. The Totem pole PFC is widely used as the PFC stage. For the DC-DC stage, LLC and phase-shifted full bridge (PSFB) are the two most popular topologies. Usually, current server PSU is based on a two-chip architecture, as shown in Figure 8-1. Telecom PSU is more likely to have a single-chip architecture, as shown in Figure 8-2.

The PFC stage draws sine-wave current from the AC mains in phase with the AC voltage, and maintains a steady DC bus voltage (VDC, typically +400 V) across its output. This output voltage is applied to the input of DC-DC stage, which converts it to an isolated low-output voltage Vout (12 V/48 V for server, 48 V for telecom).

Copyright © 2026 Texas Instruments Incorporated

8.2.1.1.1 System Block Diagram

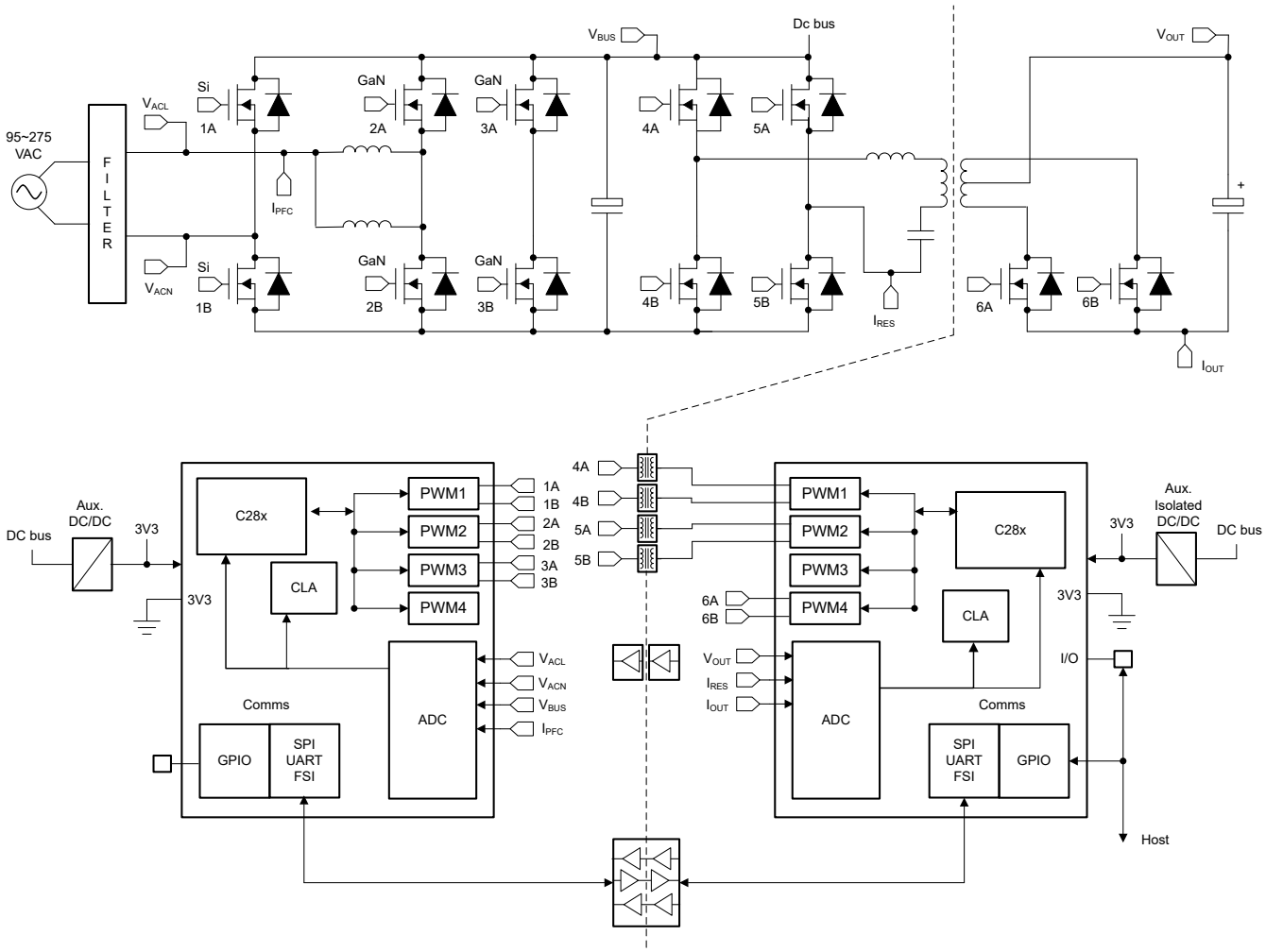

Figure 8-1. Typical Server PSU Architecture

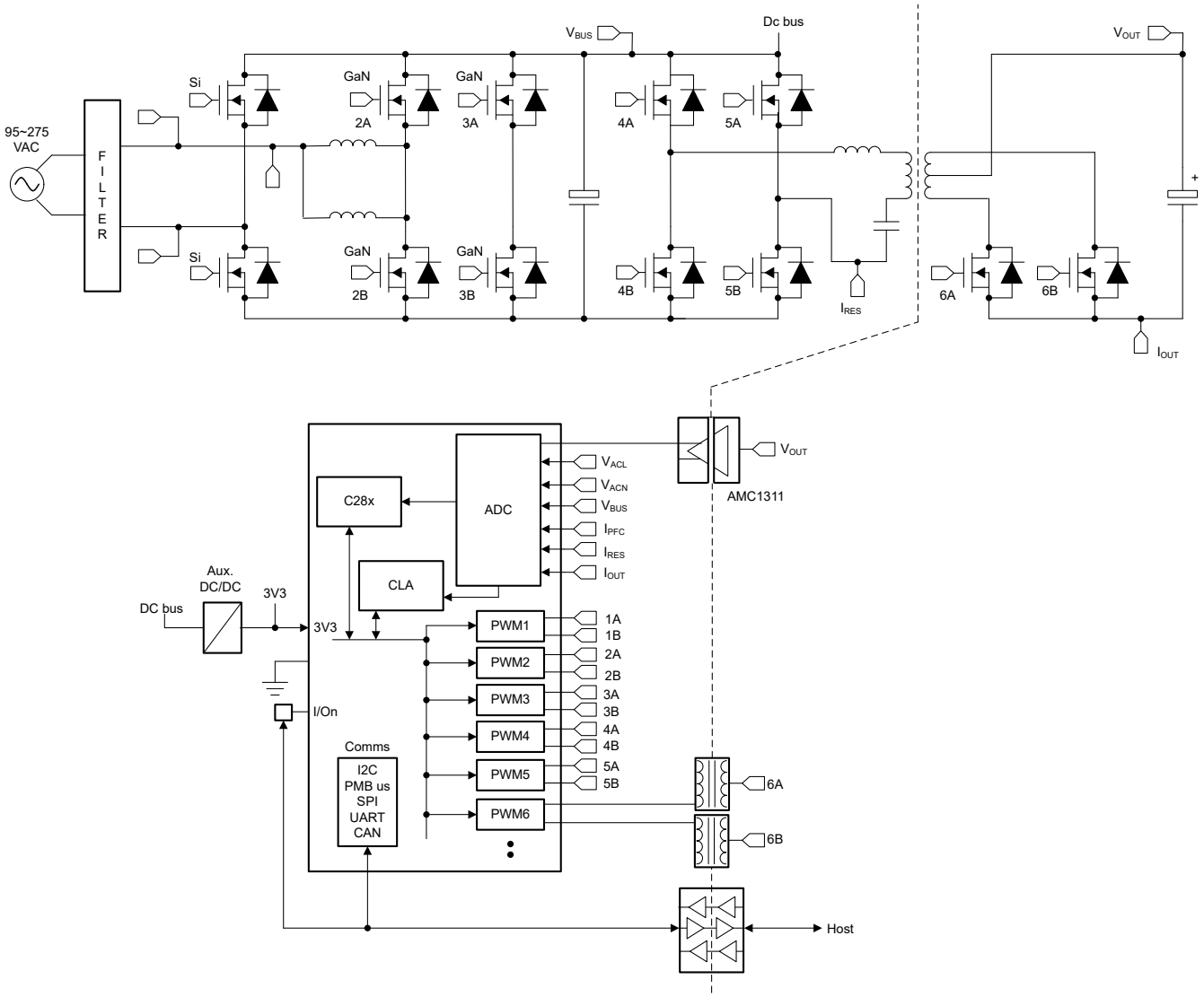

Figure 8-2. Typical Telecom PSU Architecture

8.2.1.1.2 Server and Telecom PSU Resources

Reference Designs and Associated Training Videos

A potential firmware mistake may lead to control instability Application Report

PMP41081 1-kW, 12-V HHC LLC reference design using C2000™ real-time microcontroller
This reference design is a 1-kW, 400-V to 12-V half-bridge resonant DC/DC platform used to evaluate the load transient performance of hybrid-hysteretic control (HHC) with a C2000™ microcontroller.

3-kW phase-shifted full bridge with active clamp reference design with > 270-W/in3 power density
This reference design is a GaN-based 3-kW phase-shifted full bridge (PSFB) targeting maximum power density. The design has an active clamp to minimize voltage stress on the secondary synchronous rectifier MOSFETs enabling use of lower voltage-rating MOSFETs with better figure-of-merit (FoM). PMP23126 uses our 30mΩ GaN on the primary side and silicon MOSFETs on the secondary side. The LMG3522 top-side cooled GaN with integrated driver and protection enables higher efficiency by maintaining ZVS over a wider range of operation compared to Si MOSFET. The PSFB operates at 100 kHz and achieves a peak efficiency of 97.74%.

PMP23069 3.6-kW single-phase totem-pole bridgeless PFC reference design with a > 180-W/in³ power density

Copyright © 2026 Texas Instruments Incorporated

This reference design is a GaN-based 3.6-kW single-phase continuous conduction mode (CCM) totem-pole power factor correction (PFC) converter targeting maximum power density. The power stage is followed by a small boost converter, which helps to reduce the size of the bulk capacitor. The LMG3522 top-side cooled GaN with integrated driver and protection enables higher efficiency and reduces power supply size and complexity. The F28004x or F28002x C2000™ controller is used for all the advanced controls that includes fast relay control; baby boost operation during AC dropout event; reverse-current-flow protection; and communication between the PFC and the housekeeping controller. The PFC operates at a switching frequency of 65 kHz and achieves peak efficiency of 98.7%.

PMP41017 3kW two-phase interleaved half-bridge LLC reference design with GaN and C2000™ MCU
This reference design is a 3-kW, two-phase, interleaved half-bridge inductor-inductor-capacitor (LLC) using the LMG3422 and C2000™ devices.

How GaN switch integration enables low THD and high efficiency in PFC Application Report

Solving AC dropout recovery in a high-density GaN-optimized PFC converter Application Report

TIDA-010062 1-kW, 80 Plus titanium, GaN CCM totem pole bridgeless PFC and half-bridge LLC reference design
This reference design is a digitally controlled, compact 1-kW AC/DC power supply design for server power supply unit (PSU) and telecom rectifier applications. The highly efficient design supports two main power stages, including a front-end continuous conduction mode (CCM) totem-pole bridgeless power factor correction (PFC) stage. The PFC stage features an LMG341x GaN FET with integrated driver to provide enhanced efficiency across a wide load range and meet 80-plus titanium requirements. The design also supports a half-bridge LLC isolated DC/DC stage to achieve a +12-V DC output at 1-kW. Two control cards use C2000™ Entry-Performance MCUs to control both power stages.

TIDA-010203 4-kW single-phase totem pole PFC reference design with C2000 and GaN
This reference design is a 4-kW CCM totem-pole PFC with a F280049/F280025 control card and an LMG342x EVM board. This design demonstrates a robust PFC solution, which avoids isolated current sense by putting the controller's ground in the middle of a MOSFET leg. Benefitting from non-isolation, AC current sense can be implemented by high-speed amplifier OPA607, helping to realize reliable overcurrent protection. In this design, efficiency, thermal image, AC drop, lighting surge, and EMI CE are fully validated. With completed test data, this reference design shows the maturity of totem-pole PFC with C2000 and GaN, and is a good study platform for high-efficiency products' PFC stage design.

TIDM-02011 Live firmware update reference design with C2000™ real-time MCUs
This reference design illustrates live firmware update (LFU) without device reset on a C2000™ real-time MCU, on both the C28x CPU and the control law accelerator (CLA). The software available with this design helps accelerate your time to market. LFU without device reset is an important consideration for high availability systems similar to server power supply units (PSU), where downtime needs to be minimized. Review compiler version guidance in the design guide when using the C2000WARE-DIGITALPOWER-SDK with this reference design.

TIDM-1001 Two Phase Interleaved LLC Resonant Converter Reference Design Using C2000™ MCUs
Resonant converters are popular DC-DC converters frequently used in server, telecom, automotive, industrial, and other power supply applications. Their high performance (efficiency, power density, etc.), improving requirements of the various industry standards, and the ever-increasing power density goals have made these converters a good choice for medium- to high-power applications. This design implements a digitally controlled 500-W two-phase interleaved LLC resonant converter. The system is controlled by a single C2000™ microcontroller (MCU), TMS320F280025C, which also generates PWM waveforms for all power electronic switching devices under all operating modes. This design implements a novel current-sharing technique to accurately achieve current-balancing between phases.

Variable-frequency, ZVS, 5-kW, GaN-based, two-phase totem-pole PFC reference design
This reference design is a high-density and high-efficiency 5-kW totem-pole power factor correction (PFC) design. The design uses a two-phase totem-pole PFC operating with variable frequency and zero voltage switching (ZVS). The control uses a new topology and improved triangular current mode (iTCM) to achieve both

Copyright © 2026 Texas Instruments Incorporated

small size and high efficiency. The design uses a high performance processing core inside a TMS320F280049C microcontroller to maintain efficiency over a wide operating range. The PFC operates with variable frequency between 100 kHz and 800 kHz. A peak system efficiency of 99% was achieved with an open-frame power density of 120 W/in3.

8.2.1.2 Single-Phase Online UPS

Uninterruptible power supplies (UPS) play an important role in interfacing critical loads such as computers, communication systems, medical/life support systems, and industrial controls to the utility power grid. They are designed to provide clean and continuous power to the load under essentially any normal or abnormal utility power condition. Among the various UPS topologies or configurations, on-line UPS, also known as inverter-preferred UPS, offers the best line-conditioning performance and the most protection to the load against any utility power problems. It provides regulated sinusoidal output voltage under any input line condition. When powered from the utility power lines, it draws sinusoidal input current at a high input power factor. These improved input/output characteristics make on-line UPS the ideal solution in many applications.

A triple conversion on-line UPS system is shown in Figure 8-3. The power factor correction (PFC) input stage is an ac-to-dc converter, which rectifies the input Vac and creates the dc bus voltage while maintaining sinusoidal input current at a high input power factor. The PFC stage also regulates the dc bus voltage against variation in input Vac. The dc bus voltage is inverted through the output dc-to-ac inverter stage to generate the output Vac of appropriate frequency. A dc-to-dc buck converter stage implements the battery charger. The battery charger stage steps down the high dc bus voltage (up to 400 V) to allow a smaller battery to be charged. A dc-to-dc boost converter raises the battery voltage up to the bus voltage when the system is operating in battery backup mode.

8.2.1.2.1 System Block Diagram

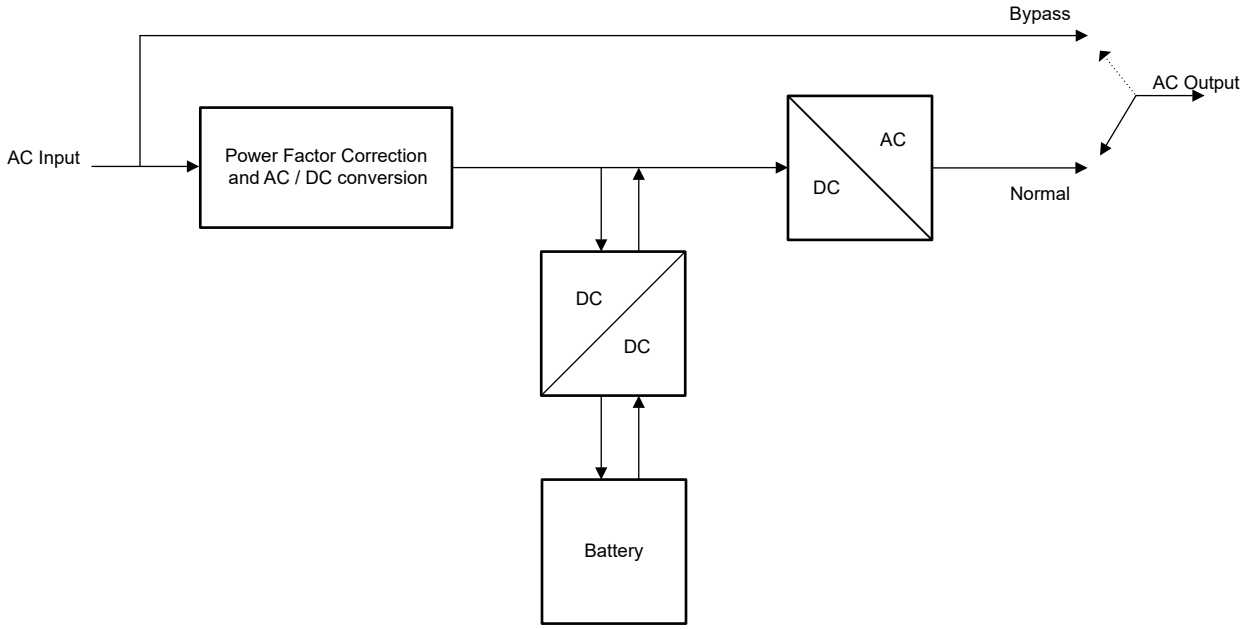

Figure 8-3. Triple Conversion Online UPS System

Copyright © 2026 Texas Instruments Incorporated

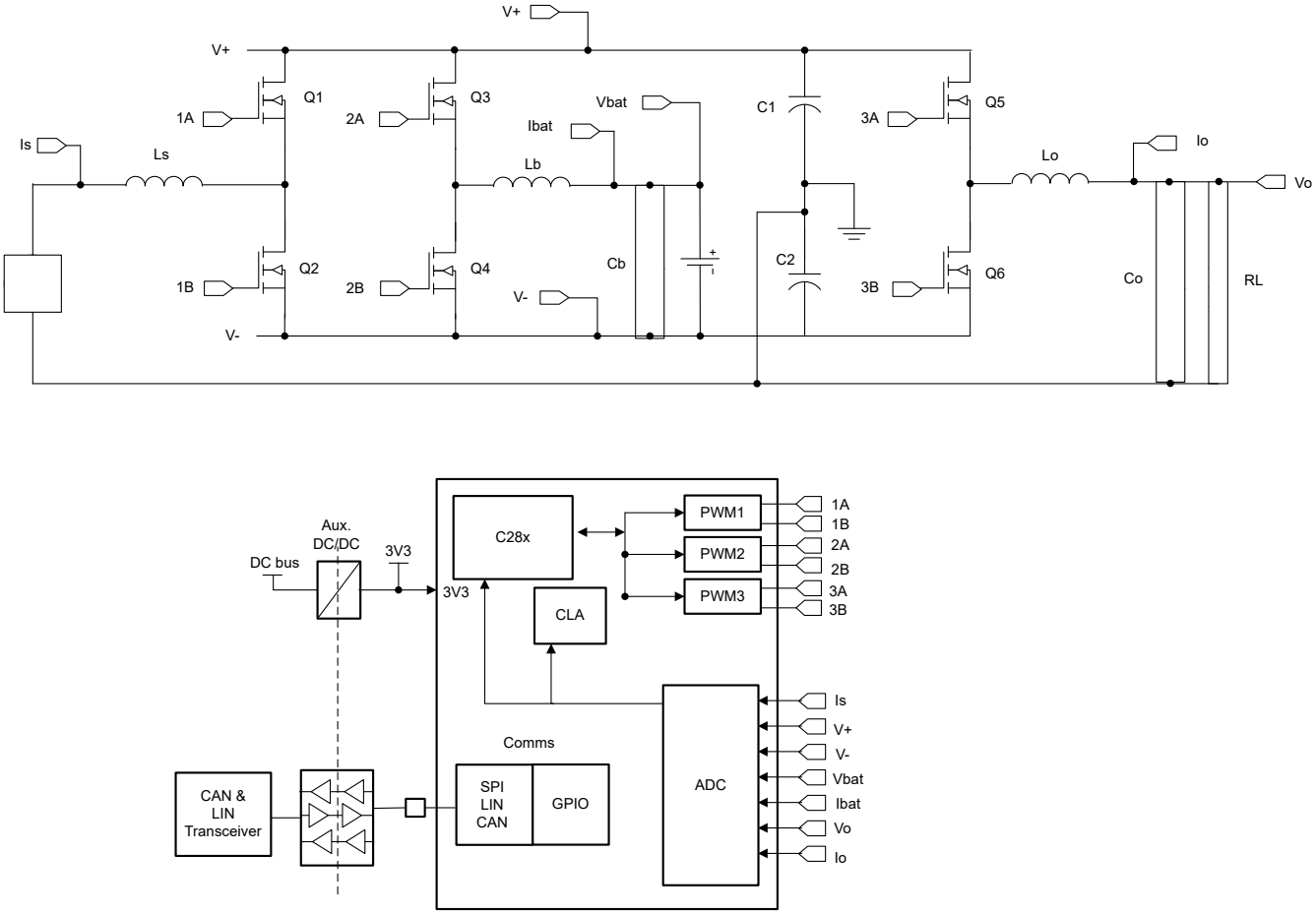

Figure 8-4. Single Phase Online UPS

8.2.1.2.2 Single phase online UPS Resources

Reference Designs and Associated Training Videos

TIDM-HV-1PH-DCAC Single-Phase Inverter Reference Design With Voltage Source and Grid Connected Modes
This reference design implements single-phase inverter (DC-AC) control using the C2000™ F2837xD and F28004x microcontrollers. Design supports two modes of operation for the inverter. First is the voltage source mode using an output LC filter. This control mode is typically used in uninterruptible power supplies (UPS). Second is grid connected mode with an output LCL filter, which is typically used in solar inverters. Firmware for the design is supported under the powerSUITE framework which enables adaptation using the Solution Adapter and enables tuning of the control loop using the Compensation Designer and SFRA. High-efficiency, low THD and intuitive software make this design attractive for engineers working on inverter design for UPS and alternative energy applications such as PV inverters, grid storage and micro grids.

TIDM-02008 Bidirectional high density GaN CCM totem pole PFC using C2000™ MCU
This reference design is a 3.-kW bidirectional interleaved continuous conduction mode (CCM) totem-pole (TTPL) bridgeless power factor correction (PFC) power stage using a C2000™ real-time controller and LMG3410R070 gallium nitride (GaN) with integrated driver and protection. This power topology is capable of bidirectional power flow (PFC and grid-tied inverter) and it uses LMG341x GaN devices, which enables higher efficiency and reduction in size of the power supply. The design supports phase shedding and adaptive dead time for efficiency improvements, input cap compensation scheme for improved power factor at light loads, and non-linear voltage loop to reduce voltage spikes under transient in PFC mode. The hardware and software available with this reference design accelerates time to market.

Copyright © 2026 Texas Instruments Incorporated

TIDU638 TIDM-BUCKBOOST-BIDIR Bi-Directional Non-Isolated Buck Boost Converter
This design implements a bi-directional, non-isolated buck boost power converter, ideal for solar microconverters, hybrid electric vehicles (HEV) including Regeneration (Regen or Recuperation), and battery charging applications.

8.2.1.3 Solar Micro Inverter

A Solar Micro Inverter consists of a DC-AC inverter power stage and one or more Maximum Power Point Tracking (MPPT) DC-DC power stages. Typical switching frequency for the inverter (DC-AC) is between 20kHz-50kHz and for DC-DC side can be in the range 100kHz-200kHz. A variety of power stage topologies can be used to achieve this and the diagram only depicts a typical power stage and the control & communication requirements. A C2000 microcontroller has on-chip EPWM, ADC and analog comparator modules to implement complete digital control of such micro inverter system.

8.2.1.3.1 System Block Diagram

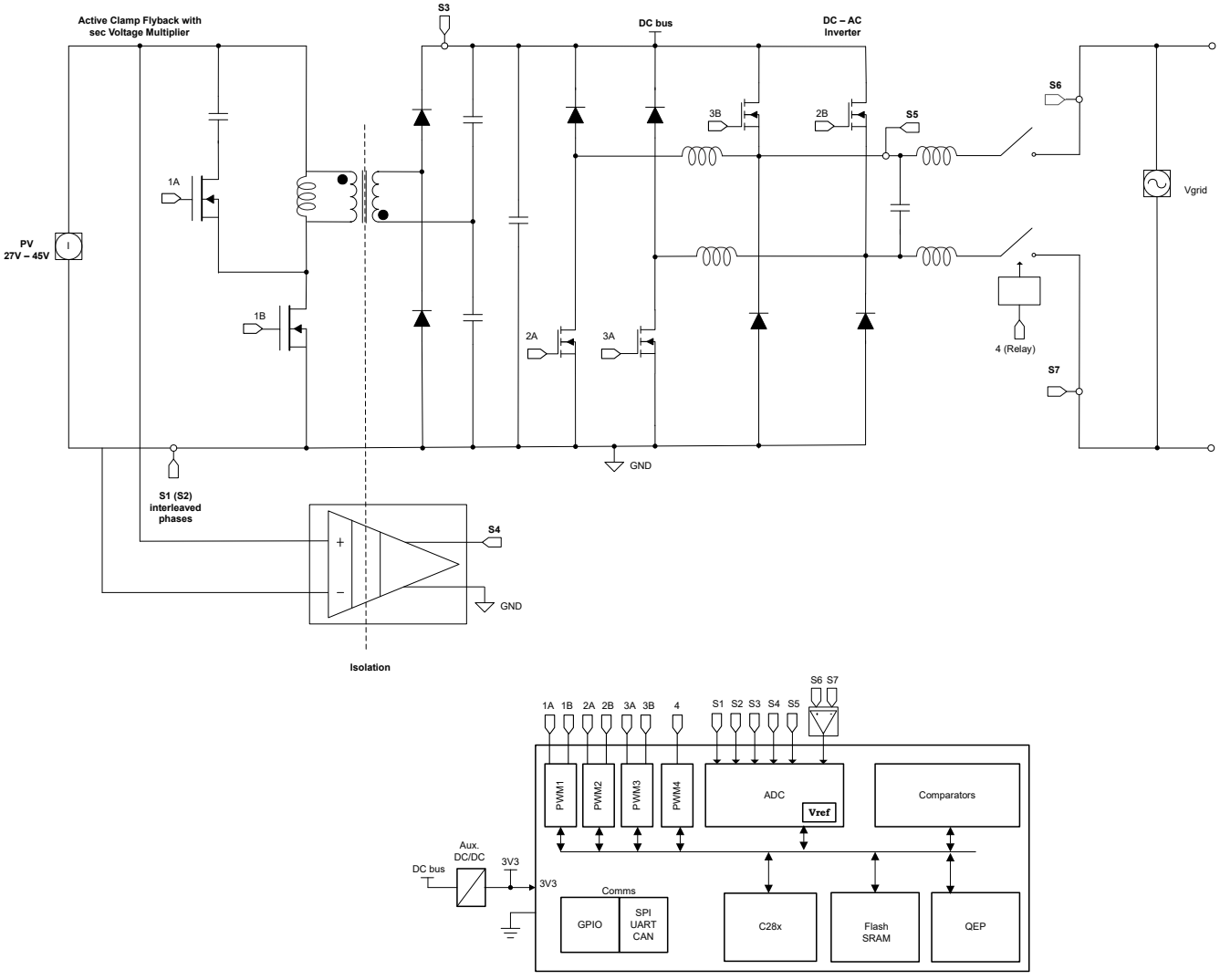

Figure 8-5. Solar Micro Inverter

Copyright © 2026 Texas Instruments Incorporated

8.2.1.3.2 Solar Micro Inverter Resources

Reference Designs and Associated Training Videos

C2000™ MCUs - Digital Power (Video)
This training series covers the basics of digital power control and how to implement it on C2000 microcontrollers.

Four Key Design Considerations When Adding Energy Storage to Solar Power Grids
This white paper explores the design considerations in a grid-connected storage-integrated solar installation system

How real-time control technologies enable reliable, scalable high-voltage designs Technical Article

C2000WARE-DIGITALPOWER-SDK
DigitalPower SDK for C2000™ microcontrollers (MCU) is a cohesive set of software infrastructure, tools, and documentation designed to minimize C2000 MCU based digital power system development time targeted for various AC-DC, DC-DC and DC-AC power supply applications. The software includes firmware that runs on C2000 digital power evaluation modules (EVMs) and TI designs (TIDs) which are targeted for solar, telecom, server, electric vehicle chargers and industrial power delivery applications. DigitalPower SDK provides all the needed resources at every stage of development and evaluation in a digital power application

Digitally Controlled Solar Micro Inverter Design using C2000™ Piccolo Microcontroller
This document presents the implementation details of a digitally-controlled solar micro inverter using the C2000 microcontroller. A 250-W isolated micro inverter design presents all the necessary PV inverter functions using the Piccolo-B (F28035) control card. This document describes the power stages on the micro inverter board, as well as an incremental build level system that builds the software by verifying open loop operation and closed loop operation. This guide describes control structures and algorithms for controlling power flow, maximizing power from the PV panel (MPPT), and locking to the grid using phase locked loop (PLL), along with hardware details of Texas Instruments Solar Micro Inverter Kit (TMDSOLARUINVKIT)

TIDU405B Grid-tied Solar Micro Inverter with MPPT
This C2000 Solar Micro Inverter EVM hardware consists of two stages. These are: (1) an active clamp fly-back DC/DC converter with secondary voltage multiplier and, (2) a DC-AC inverter. A block diagram of this system is shown in Figure 1b. The DC-DC converter draws dc current from the PV panel such that the panel operates at its maximum power transfer point. This requires maintaining the panel output, that is, the DC-DC converter input at a level determined by the MPPT algorithm. The MPPT algorithm determines the panel output current (reference current) for maximum power transfer. Then a current control loop for the fly-back converter ensures that the converter input current tracks the MPPT reference current. The fly-back converter also provides high frequency isolation for the DC-DC stage. The output of the fly-back stage is a high voltage DC bus which drives the DC-AC inverter. The inverter stage maintains the DC bus at a desired set point and injects controlled sine wave current into the grid. The inverter also implements grid synchronization in order to maintain its current waveform locked to phase and frequency of the grid voltage. A C2000 piccolo microcontroller with its on-chip PWM, ADC and analog comparator modules is able to implement complete digital control of such micro inverter system.

Software Phase Locked Loop Design Using C2000™ Microcontrollers for Single Phase Grid Connected Inverter Application Report
Grid connected applications require an accurate estimate of the grid angle to feed power synchronously to the grid. This is achieved using a software phase locked loop (PLL). This application report discusses different challenges in the design of software phase locked loops and presents a methodology to design phase locked loops using C2000 controllers for single phase grid connection applications.

Synchronous Rectification Control in CLLLC Converters Based on Hall-Effect Current Sensors Application Brief

8.2.1.4 EV Charging Station Power Module

The power module in a DC charging station consists of AC/DC power stage and DC/DC power stage. Each converter associated with its power stage comprises of power switches and gate driver, current and voltage sensing, and a real-time micro-controller. On the input side it has three-phase AC mains which are connected to

Copyright © 2026 Texas Instruments Incorporated

the AC/DC power stage. This block converts the incoming AC voltage into a fixed DC voltage of around 800 V. This voltage serves as input to the DC/DC power stage which processes power and interfaces directly with the battery on the electric vehicle. Each power stage has a separate real-time micro-controller which is responsible for the processing of analog signals and providing fast control action.

The AC/DC stage (also known as the PFC stage) is the first level of power conversion in an EV charging station. It converts the incoming AC power from the grid (380–415 VAC) into a stable DC link voltage of around 800 V. The PFC stage maintains sinusoidal input currents, with typically a THD < 5%, and provides controlled DC output voltage higher than the amplitude of the line-to-line input voltage. The DC/DC stage is the second level of power conversion in an EV charging station. It converts the incoming DC link voltage of 800 V (in case of three-phase systems) to a lower DC voltage to charge the battery of an electric vehicle. The DC/DC converter must be capable of delivering rated power to the battery over a wide range with the capability of charging the battery at constant current or at constant voltage modes, depending on the State Of Charge (SOC) of the battery.

8.2.1.4.1 System Block Diagram

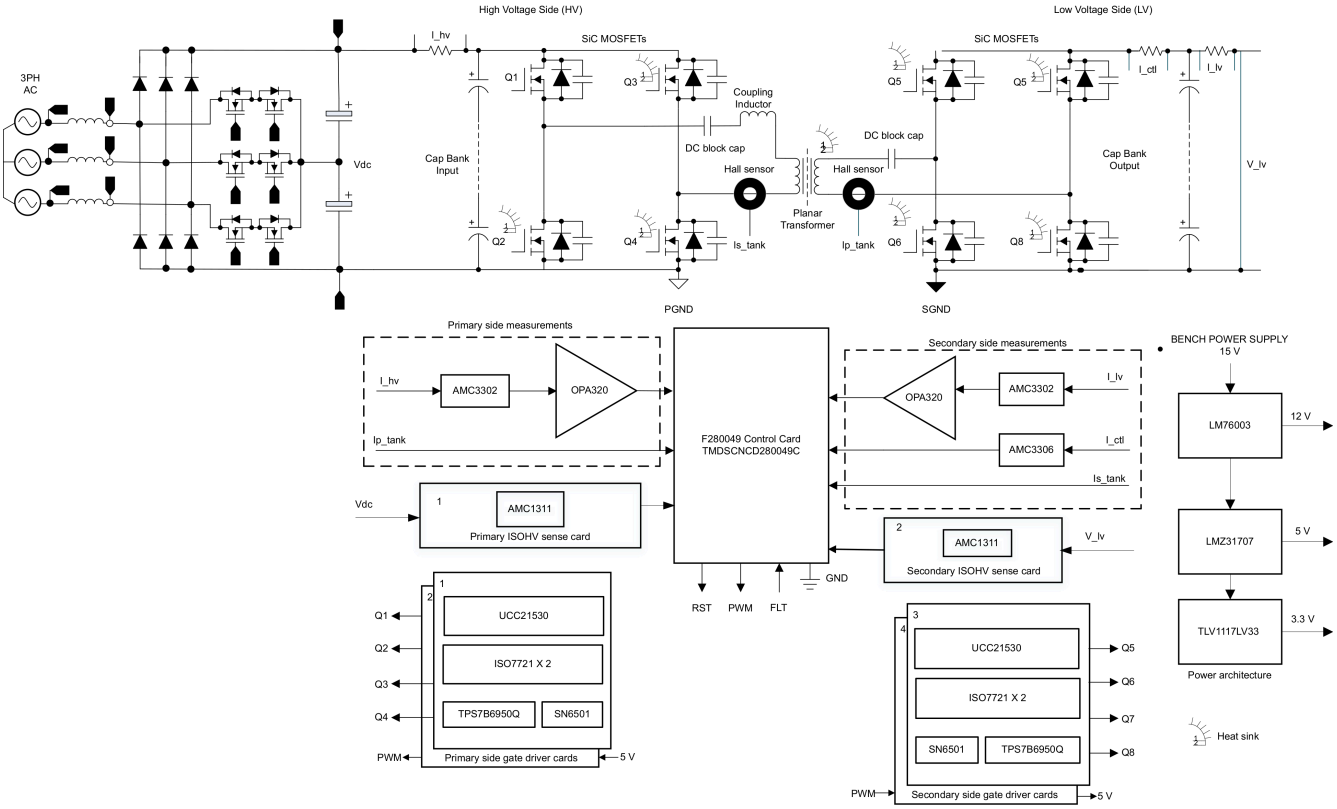

Figure 8-6. Dual-active-bridge DC/DC converter

8.2.1.4.2 EV Charging Station Power Module Resources

Reference Designs and Associated Training Videos

TIDA-01606 10-kW, bidirectional three-phase three-level (T-type) inverter and PFC reference design
This reference design provides an overview on how to implement a bidirectional three-level, three-phase, SiC-based active front end (AFE) inverter and PFC stage. The design uses a switching frequency of 50 kHz and a LCL output filter to reduce the size of the magnetics. A peak efficiency of 99% is achieved. The design shows how to implement a complete three phase AFE control in the DQ domain. The control and software is validated on the actual hardware and on hardware in the loop (HIL) setup.

TIDA-010210 11-kW, bidirectional, three-phase ANPC based on GaN reference design

Copyright © 2026 Texas Instruments Incorporated

This reference design provides a design template for implementing a three-level, three-phase, gallium nitride (GaN) based ANPC inverter power stage. The use of fast switching power devices makes it possible to switch at a higher frequency of 100 kHz, reducing the size of magnetics for the filter and increasing the power density of the power stage. The multilevel topology allows the use of 600-V rated power devices at higher DC bus voltages of up to 1000 V. The lower switching voltage stress reduces switching losses, resulting in a peak efficiency of 98.5%

TIDA-010054 Bi-directional, dual active bridge reference design for level 3 electric vehicle charging stations
This reference design provides an overview on the implementation of a single-phase Dual Active Bridge (DAB) DC/DC converter. DAB topology offers advantages like soft-switching commutations, a decreased number of devices and high efficiency. The design is beneficial where power density, cost, weight, galvanic isolation, high-voltage conversion ratio, and reliability are critical factors, making it ideal for EV charging stations and energy storage applications. Modularity and symmetrical structure in the DAB allow for stacking converters to achieve high power throughput and facilitate a bidirectional mode of operation to support battery charging and discharging applications.

C2000™ MCUs - Electric vehicle (EV) training videos (Video)
This collection of C2000™ MCU videos covers electric vehicle (EV)-specific training in both English and Chinese.

Maximizing power for Level 3 EV charging stations
This explains how C2000's rich portfolio provide optimal solutions that help engineers solve design challenges and implement advanced power topologies.

Power Topology Considerations for Electric Vehicle Charging Stations Application Report
This Application Report discusses the topology consideration for designing power modules that acts as a building block for design of these fast DC Charging Station.

TIDM-02000 Peak current-mode controlled phase-shifted full-bridge reference design using C2000™ real-time MCU
This design implements a digitally peak current mode-controlled (PCMC) phase-shifted full bridge (PSFB) DC-DC converter that converts a 400-V DC input to a regulated 12-V DC output. Novel PCMC waveform generation based on the type-4 PWM and internal slope compensation; and simple PCMC implementation are the highlights of this design. A TMS320F280049C MCU from the C2000 real-time microcontroller family is used.

TIDUEG2C TIDM-02002 Bidirectional CLLLC resonant dual active bridge (DAB) reference design for HEV/EV onboard charger
The CLLLC resonant DAB with bidirectional power flow capability and soft switching characteristics is an ideal candidate for Hybrid Electric Vehicle/Electric Vehicle (HEV/EV) on-board chargers and energy storage applications. This design illustrates control of this power topology using a C2000™ MCU in closed voltage and closed current-loop mode. The hardware and software available with this design help accelerate your time to market.

TIDM-1000 Vienna Rectifier-Based Three Phase Power Factor Correction Reference Design Using C2000 MCU
The Vienna rectifier power topology is used in high-power, three-phase power factor correction applications such as off-board electric vehicle charging and telecom rectifiers. This design illustrates how to control a Vienna rectifier using a C2000 MCU.

8.2.1.5 Servo Drive Control Module

Servo drives require high precision current and voltage sensing for accurate torque control and often supports interfaces for multiple encoder types along with communication interfaces. This C2000 device can be used either as single chip solution for standalone servo drive (shown in Figure 8-7) or can be used in decentralized systems (shown in Figure 8-8). In the latter case, the F2838x C2000 device functions as the controller which samples all the voltage and current inputs and generates the correct PWM signals for inverter. Each C2000 device serves as real-time controller for a target axis, running motor current control loop. Using the Fast Serial Interface (FSI) peripheral, up to 16 axes can be managed with one C2000 device. As an outer loop controller, the C2000 device

Copyright © 2026 Texas Instruments Incorporated

executes main axis motor control, controls data exchange with all secondary axis over FSI and communicates with a host or PLC through EtherCAT.

8.2.1.5.1 System Block Diagram

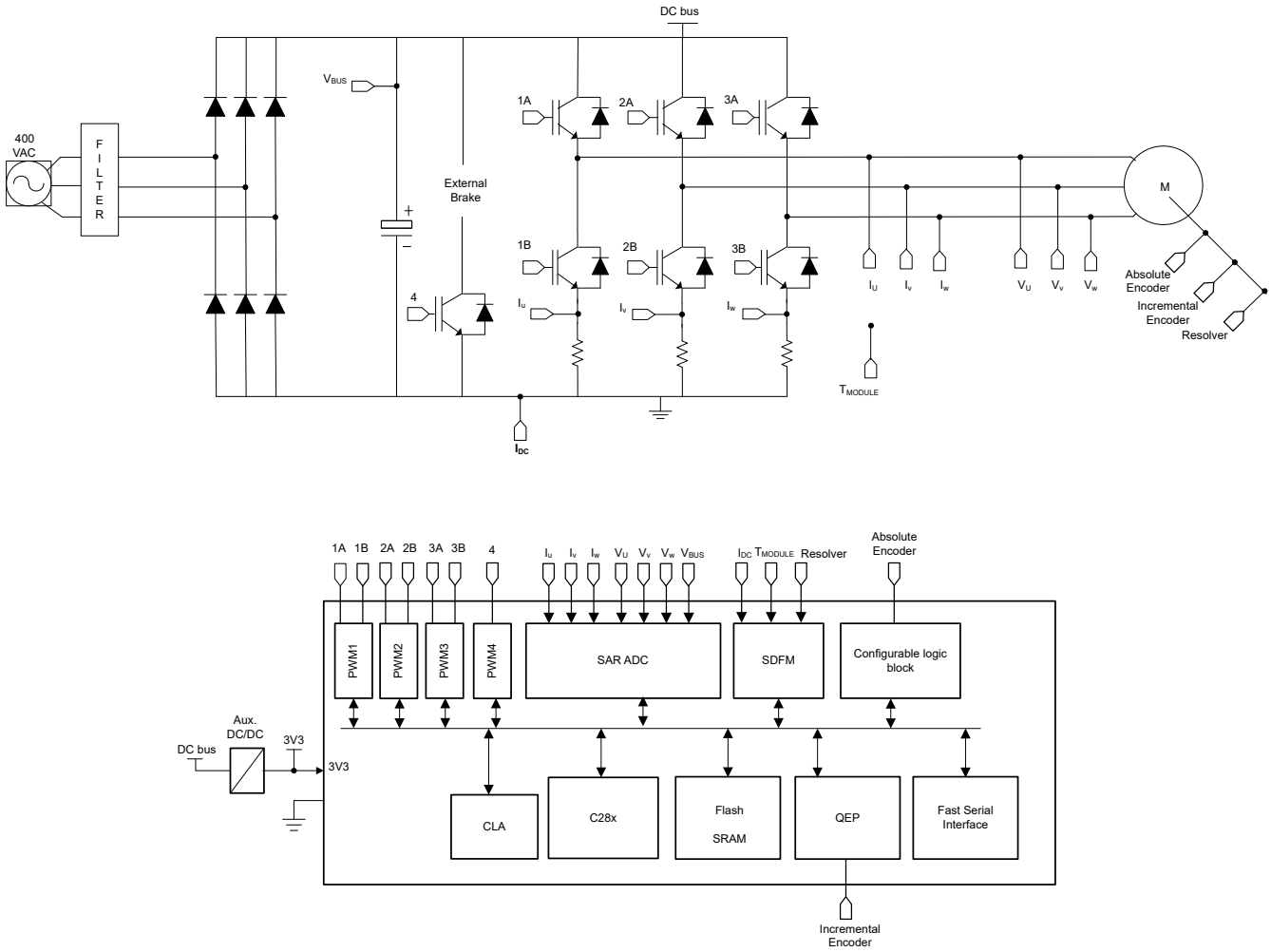

Figure 8-7. Servo Drive Control Module

Copyright © 2026 Texas Instruments Incorporated

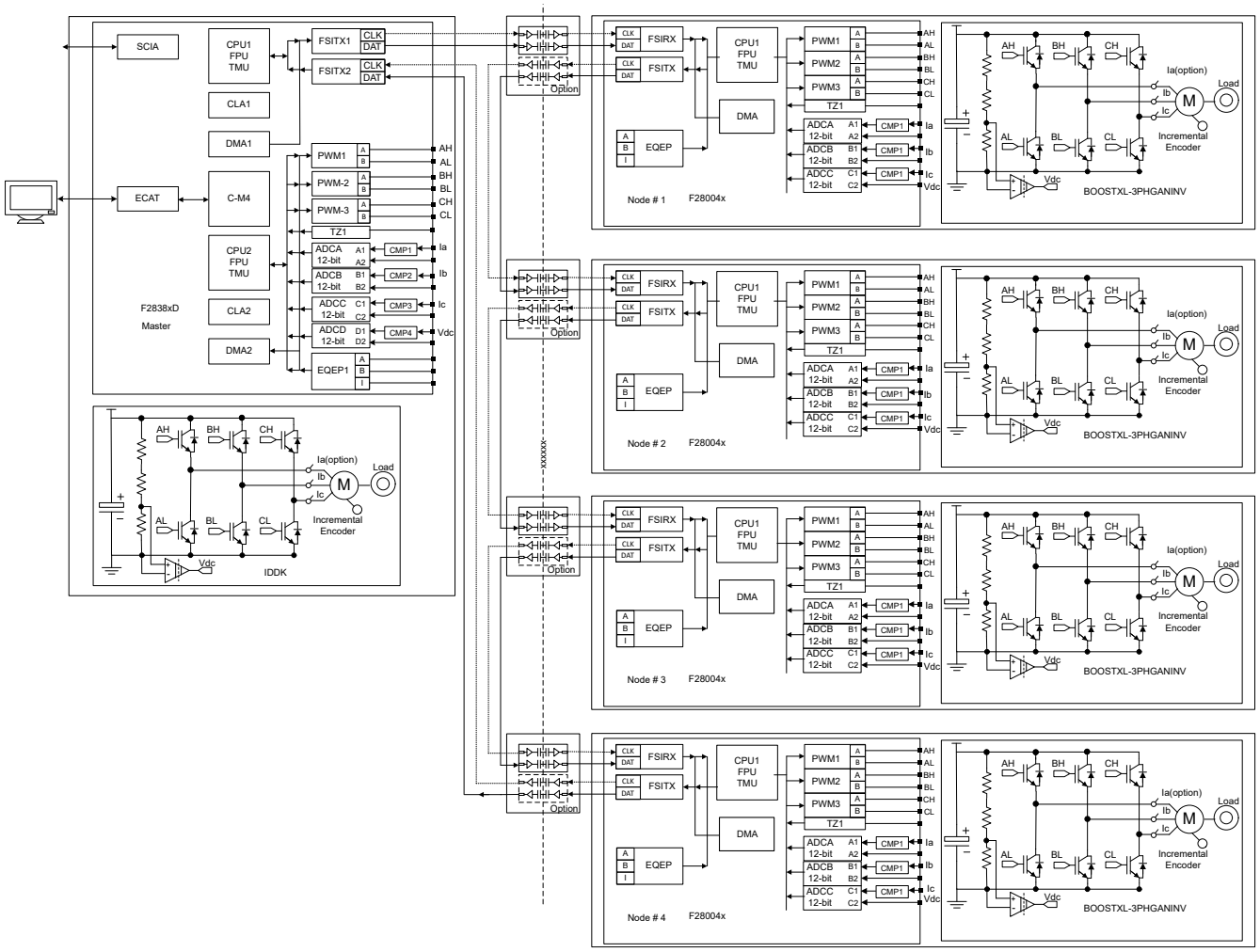

Figure 8-8. Distributed Multi-Axis Servo Drive

8.2.1.5.2 Servo Drive Control Module Resources

Reference Designs and Associated Training Videos

48-V Three-Phase Inverter With Shunt-Based In-Line Motor Phase Current Sensing Evaluation Module
The BOOSTXL-3PHGANINV evaluation module features a 48-V/10-A three-phase GaN inverter with precision in-line shunt-based phase current sensing for accurate control of precision drives such as servo drives.

BOOSTXL-DRV8323RH DRV8323RH Three-Phase Smart Gate Driver With Buck, Shunt Amps (Hardware Interface) Evaluation Module
The BOOSTXL-DRV8323RH is a 15A, 3-phase brushless DC drive stage based on the DRV8323RH gate driver and CSD88599Q5DC NexFETTM power blocks. The module has individual DC bus and phase voltage sense as well as individual low-side current shunt amplifiers, making this EVM ideal for sensorless BLDC algorithms. The module supplies MCU 3.3V power with an integrated 0.6A step down buck regulator. The drive stage is fully protected with short circuit, thermal, shoot-through, and under voltage protection and easily configurable via different hardware configuration pins.

BOOSTXL-DRV8323RS DRV8323RS three-phase smart gate driver with buck, shunt amps (SPI interface) evaluation module
The BOOSTXL-DRV8323RS is a 15A, 3-phase brushless DC drive stage based on the DRV8323RH gate driver and CSD88599Q5DC NexFETTM power blocks. The module has individual DC bus and phase voltage sense as well as individual low-side current shunt amplifiers, making this evaluation module ideal for sensorless BLDC

Copyright © 2026 Texas Instruments Incorporated

algorithms. The module supplies MCU 3.3V power with an integrated 0.6A step down buck regulator. The drive stage is fully protected with short circuit, thermal, shoot-through, and under voltage protection and easily configurable via the devices SPI registers.

C2000 DesignDRIVE Development Kit for Industrial Motor Control

The DesignDRIVE Development Kit (IDDK) hardware offers an integrated servo drive design with full power stage to drive a high voltage three-phase motor and eases the evaluation of a range of position feedback, current sensing and control topologies.

C2000 DesignDRIVE position manager BoosterPack™ plug-in module

The PositionManager BoosterPack is a flexible low voltage platform intended for evaluating interfaces to absolute encoders and analog sensors like resolvers and SinCos transducers. When combined with the DesignDRIVE Position Manager software solutions this low-cost evaluation module becomes a powerful tool for interfacing many popular position encoder types such as EnDat, BiSS and T-format with C2000 Real-Time Control devices. C2000 Position Manager technology integrates interfaces to the most popular digital and analog position sensors onto C2000 Real-Time Controller, thus eliminating the need for external FPGAs for these functions.

C2000Ware MotorControl SDK

MotorControl SDK for C2000™ microcontrollers (MCU) is a cohesive set of software infrastructure, tools, and documentation designed to minimize C2000 real-time controller based motor control system development time targeted for various three-phase motor control applications. The software includes firmware that runs on C2000 motor control evaluation modules (EVMs) and TI designs (TIDs) which are targeted for industrial drives, robotics, appliances, and automotive applications. MotorControl SDK provides all the needed resources at every stage of development and evaluation for high performance motor control applications.

TIDM-02006 Distributed multi-axis servo drive over fast serial interface (FSI) reference design

This reference design presents an example distributed or decentralized multi-axis servo drive over Fast Serial Interface (FSI) using C2000™ real-time controllers. Multi-axis servo drives are used in many applications such as factory automation and robots. The cost per axis, performance and ease of use are always high concerns for such systems. FSI is a cost-optimized and reliable high speed communication interface with low jitter that can daisy-chain multiple C2000 microcontrollers. In this design, each TMS320F280049 or TMS320F280025 real-time controller serves as a real-time controller for a distributed axis, running motor current control loop. A single TMS320F28388D runs position and speed control loops for all axes. The same F2838x also executes a centralized motor control axis plus EtherCAT communication, leveraging its multiple cores. The design uses our existing EVM kits, the software is released within C2000WARE MotorControl SDK.

TIDM-02007 Dual-axis motor drive using fast current loop (FCL) and SFRA on a single MCU reference design

This reference design presents a dual-axis motor drive using fast current loop (FCL) and software frequency response analyzer (SFRA) technologies on a single C2000 controller. The FCL utilizes dual core (CPU, CLA) parallel processing techniques to achieve a substantial improvement in control bandwidth and phase margin, to reduce the latency between feedback sampling and PWM update, to achieve higher control bandwidth and maximum modulation index, to improve DC bus utilization by the drive and to increase speed range of the motor. The integrated SFRA tool enables developers to quickly measure the frequency response of the application to tune speed and current controllers. Given the system-level integration and performance of C2000 series, MCUs have the ability to support dual-axis motor drive requirements simultaneously that delivers very robust position control with higher performance. The software is released within C2000Ware MotorControl SDK.

Copyright © 2026 Texas Instruments Incorporated

9 Device and Documentation Support

9.1 Device and Development Support Tool Nomenclature

To designate the stages in the product development cycle, TI assigns prefixes to the part numbers of all TMS320 MCU devices and support tools. Each TMS320™ MCU commercial family member has one of three prefixes: TMX, TMP, or TMS (for example, **TMS**320F280049). Texas Instruments recommends two of three possible prefix designators for its support tools: TMDX and TMDS. These prefixes represent evolutionary stages of product development from engineering prototypes (with TMX for devices and TMDX for tools) through fully qualified production devices and tools (with TMS for devices and TMDS for tools).

Device development evolutionary flow:

TMX Experimental device that is not necessarily representative of the final device's electrical specifications and may not use production assembly flow.

TMP Prototype device that is not necessarily the final silicon die and may not necessarily meet final electrical specifications.

TMS Production version of the silicon die that is fully qualified.

Support tool development evolutionary flow:

TMDX Development-support product that has not yet completed Texas Instruments internal qualification testing.

TMDS Fully-qualified development-support product.

TMX and TMP devices and TMDX development-support tools are shipped against the following disclaimer:

"Developmental product is intended for internal evaluation purposes."

Production devices and TMDS development-support tools have been characterized fully, and the quality and reliability of the device have been demonstrated fully. TI's standard warranty applies.

Predictions show that prototype devices (X or P) have a greater failure rate than the standard production devices. Texas Instruments recommends that these devices not be used in any production system because their expected end-use failure rate still is undefined. Only qualified production devices are to be used.

TI device nomenclature also includes a suffix with the device family name. This suffix indicates the package type (for example, PZ) and temperature range (for example, S).

For device part numbers and further ordering information, see the TI website (www.ti.com) or contact your TI sales representative.

For additional description of the device nomenclature markings on the die, see the *TMS320F28004x Real-Time MCUs Silicon Errata*.

Copyright © 2026 Texas Instruments Incorporated

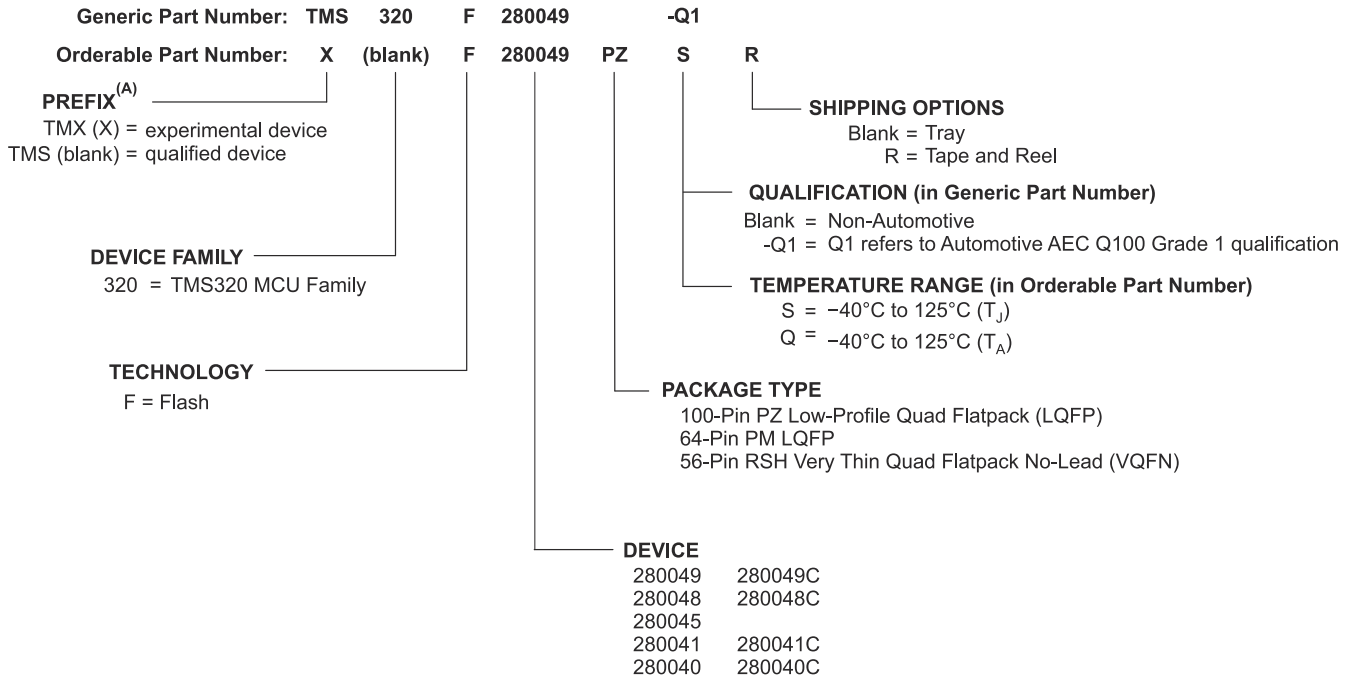

A. Prefix X is used in orderable part numbers.

Figure 9-1. Device Nomenclature

9.2 Markings

Figure 9-2 and Figure 9-3 provide examples of the F28004x device markings and define each of the markings. The device revision can be determined by the symbols marked on the top of the package as shown in Figure 9-2. Some prototype devices may have markings different from those illustrated.

Copyright © 2026 Texas Instruments Incorporated

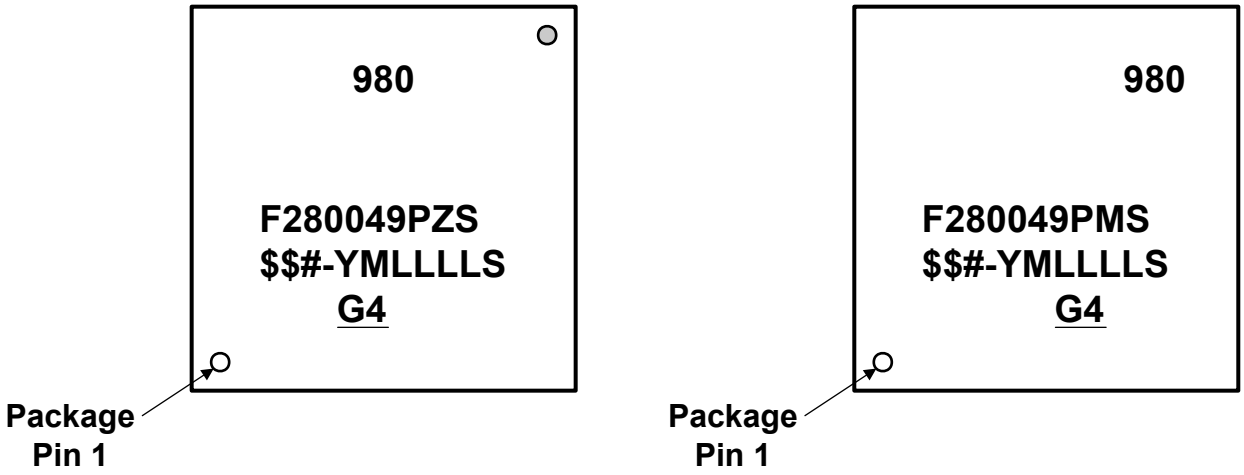

YMLLLLS = Lot Trace Code

980 = TI EIA Code
YM = 2-digit Year/Month Code
LLLL = Assembly Lot Code
S = Assembly Site Code
$$ = Wafer Fab Code (one or two characters) as applicable
= Silicon Revision Code

G4 = Green (Low Halogen and RoHS-compliant)

Figure 9-2. Examples of Device Markings for PM and PZ Packages

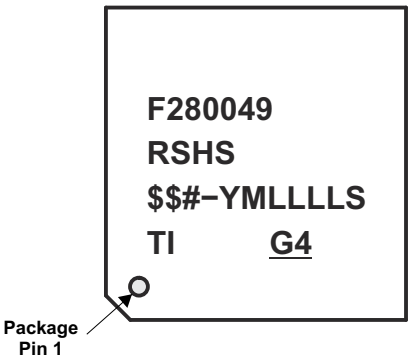

YMLLLLS = Lot Trace Code

YM = 2-Digit Year/Month Code
LLLL = Assembly Lot
S = Assembly Site Code
$$ = Wafer Fab Code (one or two characters) as applicable
= Silicon Revision Code

G4 = Green (Low Halogen and RoHS-compliant)

Figure 9-3. Example of Device Markings for RSH Package

Table 9-1. Determining Silicon Revision From Lot Trace Code

SILICON REVISION CODE	SILICON REVISION	REVID(1) Address: 0x5D00C	COMMENTS
Blank	0	0x0000 0000	This silicon revision is available as TMX.
A	A	0x0000 0001	This silicon revision is available as TMX.
B	B	0x0000 0002	This silicon revision is available as TMX and TMS.
D	D	0x0000 0004	This silicon revision is available as TMS.

(1) Silicon Revision ID

Copyright © 2026 Texas Instruments Incorporated

9.3 Tools and Software

TI offers an extensive line of development tools. Some of the tools and software to evaluate the performance of the device, generate code, and develop solutions follow. To view all available tools and software for C2000 real-time control MCUs, visit the Start development with our C2000™ real-time microcontrollers page.

Development Tools

F280049C controlCARD Evaluation Module
The F280049C controlCARD Evaluation Module is an HSEC180 controlCARD-based evaluation and development tool for the C2000 F28004x series of microcontroller products. controlCARDs are ideal to use for initial evaluation and system prototyping. controlCARDs are complete board-level modules that utilize one of two standard form factors (100-pin DIMM or 180-pin HSEC) to provide a low-profile single-board controller solution. For first evaluation, controlCARDs are typically purchased bundled with a baseboard or bundled in an application kit.

Software Tools

C2000Ware for C2000 MCUs
C2000Ware for C2000™ microcontrollers is a cohesive set of development software and documentation designed to minimize software development time. From device-specific drivers and libraries to device peripheral examples, C2000Ware provides a solid foundation to begin development and evaluation of your product.

Code Composer Studio (CCS) Integrated Development Environment (IDE) for C2000 Microcontrollers
Code Composer Studio is an integrated development environment (IDE) that supports TI's Microcontroller and Embedded Processors portfolio. Code Composer Studio comprises a suite of tools used to develop and debug embedded applications. It includes an optimizing C/C++ compiler, source code editor, project build environment, debugger, profiler, and many other features. The intuitive IDE provides a single user interface taking the user through each step of the application development flow. Familiar tools and interfaces allow users to get started faster than ever before. Code Composer Studio combines the advantages of the Eclipse software framework with advanced embedded debug capabilities from TI resulting in a compelling feature-rich development environment for embedded developers.

Copyright © 2026 Texas Instruments Incorporated

Pin Mux Tool
The Pin Mux Utility is a software tool which provides a Graphical User Interface for configuring pin multiplexing settings, resolving conflicts and specifying I/O cell characteristics for TI MPUs.

F021 Flash Application Programming Interface (API)
The F021 Flash Application Programming Interface (API) provides a software library of functions to program, erase, and verify F021 on-chip Flash memory.

C2000 Third-party search tool
TI has partnered with multiple companies to offer a wide range of solutions and services for TI C2000 devices. These companies can accelerate your path to production using C2000 devices. Download this search tool to quickly browse third-party details and find the right third-party to meet your needs.

UniFlash Standalone Flash Tool
UniFlash is a standalone tool used to program on-chip flash memory through a GUI, command line, or scripting interface.

Models

Various models are available for download from the product Tools & Software pages. These models include I/O Buffer Information Specification (IBIS) Models and Boundary-Scan Description Language (BSDL) Models. To view all available models, visit the Models section of the Tools & Software page for each device.

Training

To help assist design engineers in taking full advantage of the C2000 microcontroller features and performance, TI has developed a variety of training resources. Utilizing the online training materials and downloadable hands-on workshops provides an easy means for gaining a complete working knowledge of the C2000 microcontroller family. These training resources have been designed to decrease the learning curve, while reducing development time, and accelerating product time to market. For more information on the various training resources, visit the C2000™ real-time control MCUs – Support & training site.

Specific TMS320F28004x hands-on training resources can be found at C2000™ MCU Device Workshops.

Technical Introduction to the New C2000 TMS320F28004x Device Family

Discover the newest member to the C2000 MCU family. This presentation will cover the technical details of the TMS320F28004x architecture and highlight the new improvements to various key peripherals, such as an enhanced Type 2 CLA capable of running a background task, and the inclusion of a set of high-speed programmable gain amplifiers. Also, a completely new boot mode flow enables expanded booting options. Where applicable, a comparison to the TMS320F2807x MCU device series will be used, and some knowledge about the previous device architectures will be helpful in understanding the topics presented in this presentation.

Copyright © 2026 Texas Instruments Incorporated

9.4 Documentation Support

To receive notification of documentation updates, navigate to the device product folder on ti.com. Click on *Notifications* to register and receive a weekly digest of any product information that has changed. For change details, review the revision history included in any revised document.

The current documentation that describes the processor, related peripherals, and other technical collateral follows.

Errata

TMS320F28004x Real-Time MCUs Silicon Errata describes known advisories on silicon and provides workarounds.

Technical Reference Manual

TMS320F28004x Real-Time Microcontrollers Technical Reference Manual details the integration, the environment, the functional description, and the programming models for each peripheral and subsystem in the F28004x microcontrollers.

InstaSPIN Technical Reference Manuals

InstaSPIN-FOC™ and InstaSPIN-MOTION™ User's Guide describes the InstaSPIN-FOC and InstaSPIN-MOTION™ devices.

CPU User's Guides

TMS320C28x CPU and Instruction Set Reference Guide describes the central processing unit (CPU) and the assembly language instructions of the TMS320C28x fixed-point digital signal processors (DSPs). This Reference Guide also describes emulation features available on these DSPs.

TMS320C28x Extended Instruction Sets Technical Reference Manual describes the architecture, pipeline, and instruction set of the TMU, VCU-II, and FPU accelerators.

Peripheral Guides

C2000 Real-Time Control Peripherals Reference Guide describes the peripheral reference guides of the 28x DSPs.

Tools Guides

TMS320C28x Assembly Language Tools v22.6.0.LTS User's Guide describes the assembly language tools (assembler and other tools used to develop assembly language code), assembler directives, macros, common object file format, and symbolic debugging directives for the TMS320C28x device.

TMS320C28x Optimizing C/C++ Compiler v22.6.0.LTS User's Guide describes the TMS320C28x C/C++ compiler. This compiler accepts ANSI standard C/C++ source code and produces TMS320 DSP assembly language source code for the TMS320C28x device.

Migration Guides

Migration Between TMS320F28004x and TMS320F28002x describes the hardware and software differences to be aware of when moving between F28004x and F28002x C2000™ MCUs.

Migration Between TMS320F28004x and TMS320F28003x describes the hardware and software differences to be aware of when moving between F28004x and F28003x C2000™ MCUs.

Application Reports

The SMT & packaging application notes website lists documentation on TI's surface mount technology (SMT) and application notes on a variety of packaging-related topics.

Semiconductor Packing Methodology describes the packing methodologies employed to prepare semiconductor devices for shipment to end users.

Copyright © 2026 Texas Instruments Incorporated

Calculating Useful Lifetimes of Embedded Processors provides a methodology for calculating the useful lifetime of TI embedded processors (EPs) under power when used in electronic systems. It is aimed at general engineers who wish to determine if the reliability of the TI EP meets the end system reliability requirement.

An Introduction to IBIS (I/O Buffer Information Specification) Modeling discusses various aspects of IBIS including its history, advantages, compatibility, model generation flow, data requirements in modeling the input/output structures, and future trends.

Serial Flash Programming of C2000™ Microcontrollers discusses using a flash kernel and ROM loaders for serial programming a device.

The Essential Guide for Developing With C2000™ Real-Time Microcontrollers provides a deeper look into the components that differentiate the C2000 Microcontroller Unit (MCU) as it pertains to Real-Time Control Systems.

9.5 Support Resources

TI E2E™ support forums are an engineer's go-to source for fast, verified answers and design help — straight from the experts. Search existing answers or ask your own question to get the quick design help you need.

Linked content is provided "AS IS" by the respective contributors. They do not constitute TI specifications and do not necessarily reflect TI's views; see TI's Terms of Use.

9.6 Trademarks

InstaSPIN-FOC™, FAST™, TMS320C2000™, C2000™, Code Composer Studio™, InstaSPIN-MOTION™, and TI E2E™ are trademarks of Texas Instruments.
TMS320™ is a trademark of Texas Instruments.
Bosch® is a registered trademark of Robert Bosch GmbH Corporation.
All trademarks are the property of their respective owners.

9.7 Electrostatic Discharge Caution



This integrated circuit can be damaged by ESD. Texas Instruments recommends that all integrated circuits be handled with appropriate precautions. Failure to observe proper handling and installation procedures can cause damage.

ESD damage can range from subtle performance degradation to complete device failure. Precision integrated circuits may be more susceptible to damage because very small parametric changes could cause the device not to meet its published specifications.

9.8 Glossary

TI Glossary	This glossary lists and explains terms, acronyms, and definitions.

10 Revision History

Changes from January 10, 2023 to March 30, 2026 **Page**

- **This Revision History lists the changes from SPRS945G to SPRS945H.** 1
- *Features* section: Updated "Functional Safety-Compliant" feature and "Safety-related certification" feature.... 1
- *Functional Safety-Compliant Part Numbers* table: Updated table..... 2
- *Delay Blocks* section: Removed reference to external VREG..... 72
- *Internal VDD LDO Voltage Regulator (VREG)* section: Changed section title from "Internal 1.2-V LDO Voltage Regulator (VREG)" to "Internal VDD LDO Voltage Regulator (VREG)". Updated section..... 72
- *VDD Decoupling* section: Updated Configuration 1 and Configuration 2..... 75
- *Supply Sequencing Summary and Effects of Violations* section: Added *External VREG Sequence Summary* table..... 78
- *Supply Slew Rate* section: Updated section..... 78
- *Device Identification Registers* table: Added REVID for silicon revision D..... 211
- *Examples of Device Markings for PM and PZ Packages* figure: Updated F280049PZS figure..... 246
- *Determining Silicon Revision From Lot Trace Code* table: Added silicon revision D..... 246

Copyright © 2026 Texas Instruments Incorporated

11 Mechanical, Packaging, and Orderable Information

11.1 Packaging Information

The following pages include mechanical, packaging, and orderable information. This information is the most current data available for the designated devices. This data is subject to change without notice and revision of this document. For browser-based versions of this data sheet, refer to the left-hand navigation.

For packages with a thermal pad, the MECHANICAL DATA figure shows a generic thermal pad without dimensions. For the actual thermal pad dimensions that are applicable to this device, see the THERMAL PAD MECHANICAL DATA figure.

To learn more about TI packaging, visit the Packaging information website.

Copyright © 2026 Texas Instruments Incorporated

PACKAGING INFORMATION

Orderable part number	Status (1)	Material type (2)	Package | Pins	Package qty | Carrier	RoHS (3)	Lead finish/ Ball material (4)	MSL rating/ Peak reflow (5)	Op temp (°C)	Part marking (6)
F280040CPMQR	Active	Production	LQFP (PM) | 64	1000 | LARGE T&R	Yes	NIPDAU	Level-3-260C-168 HR	-40 to 125	F280040CPMQ
F280040CPMQR.B	Active	Production	LQFP (PM) | 64	1000 | LARGE T&R	Yes	NIPDAU	Level-3-260C-168 HR	-40 to 125	F280040CPMQ
F280040PMQR	Active	Production	LQFP (PM) | 64	1000 | LARGE T&R	Yes	NIPDAU	Level-3-260C-168 HR	-40 to 125	F280040PMQ
F280040PMQR.B	Active	Production	LQFP (PM) | 64	1000 | LARGE T&R	Yes	NIPDAU	Level-3-260C-168 HR	-40 to 125	F280040PMQ
F280041CPMS	Active	Production	LQFP (PM) | 64	160 | JEDEC TRAY (10+1)	Yes	NIPDAU	Level-3-260C-168 HR	-40 to 125	F280041CPMS
F280041CPMS.B	Active	Production	LQFP (PM) | 64	160 | JEDEC TRAY (10+1)	Yes	NIPDAU	Level-3-260C-168 HR	-40 to 125	F280041CPMS
F280041CPZQR	Active	Production	LQFP (PZ) | 100	1000 | LARGE T&R	Yes	NIPDAU	Level-3-260C-168 HR	-40 to 125	F280041CPZQ
F280041CPZQR.B	Active	Production	LQFP (PZ) | 100	1000 | LARGE T&R	Yes	NIPDAU	Level-3-260C-168 HR	-40 to 125	F280041CPZQ
F280041CPZS	Active	Production	LQFP (PZ) | 100	90 | JEDEC TRAY (10+1)	Yes	NIPDAU	Level-3-260C-168 HR	-40 to 125	F280041CPZS
F280041CPZS.B	Active	Production	LQFP (PZ) | 100	90 | JEDEC TRAY (10+1)	Yes	NIPDAU	Level-3-260C-168 HR	-40 to 125	F280041CPZS
F280041CRSHSR	Active	Production	VQFN (RSH) | 56	2500 | LARGE T&R	Yes	Call TI | Nipdau	Level-3-260C-168 HR	-40 to 125	F280041C RSHS
F280041CRSHSR.B	Active	Production	VQFN (RSH) | 56	2500 | LARGE T&R	Yes	NIPDAU	Level-3-260C-168 HR	-40 to 125	F280041C RSHS
F280041PMS	Active	Production	LQFP (PM) | 64	160 | JEDEC TRAY (10+1)	Yes	NIPDAU	Level-3-260C-168 HR	-40 to 125	F280041PMS
F280041PMS.B	Active	Production	LQFP (PM) | 64	160 | JEDEC TRAY (10+1)	Yes	NIPDAU	Level-3-260C-168 HR	-40 to 125	F280041PMS
F280041PMSR	Active	Production	LQFP (PM) | 64	1000 | LARGE T&R	Yes	NIPDAU	Level-3-260C-168 HR	-40 to 125	F280041PMS
F280041PMSR.B	Active	Production	LQFP (PM) | 64	1000 | LARGE T&R	Yes	NIPDAU	Level-3-260C-168 HR	-40 to 125	F280041PMS
F280041PZQR	Active	Production	LQFP (PZ) | 100	1000 | LARGE T&R	Yes	NIPDAU	Level-3-260C-168 HR	-40 to 125	F280041PZQ
F280041PZQR.B	Active	Production	LQFP (PZ) | 100	1000 | LARGE T&R	Yes	NIPDAU	Level-3-260C-168 HR	-40 to 125	F280041PZQ
F280041PZS	Active	Production	LQFP (PZ) | 100	90 | JEDEC TRAY (10+1)	Yes	NIPDAU	Level-3-260C-168 HR	-40 to 125	F280041PZS
F280041PZS.B	Active	Production	LQFP (PZ) | 100	90 | JEDEC TRAY (10+1)	Yes	NIPDAU	Level-3-260C-168 HR	-40 to 125	F280041PZS
F280041PZSR	Active	Production	LQFP (PZ) | 100	1000 | LARGE T&R	Yes	NIPDAU	Level-3-260C-168 HR	-40 to 125	F280041PZS
F280041PZSR.B	Active	Production	LQFP (PZ) | 100	1000 | LARGE T&R	Yes	NIPDAU	Level-3-260C-168 HR	-40 to 125	F280041PZS

Orderable part number	Status (1)	Material type (2)	Package | Pins	Package qty | Carrier	RoHS (3)	Lead finish/ Ball material (4)	MSL rating/ Peak reflow (5)	Op temp (°C)	Part marking (6)
F280041RSHSR	Active	Production	VQFN (RSH) | 56	2500 | LARGE T&R	Yes	NIPDAU	Level-3-260C-168 HR	-40 to 125	F280041 RSHS
F280041RSHSR.A	Active	Production	VQFN (RSH) | 56	2500 | LARGE T&R	Yes	NIPDAU	Level-3-260C-168 HR	-40 to 125	F280041 RSHS
F280041RSHSR.B	Active	Production	VQFN (RSH) | 56	2500 | LARGE T&R	Yes	NIPDAU	Level-3-260C-168 HR	-40 to 125	F280041 RSHS
F280045PMS	Active	Production	LQFP (PM) | 64	160 | JEDEC TRAY (10+1)	Yes	NIPDAU	Level-3-260C-168 HR	-40 to 125	F280045PMS
F280045PMS.B	Active	Production	LQFP (PM) | 64	160 | JEDEC TRAY (10+1)	Yes	NIPDAU	Level-3-260C-168 HR	-40 to 125	F280045PMS
F280045PMSR	Active	Production	LQFP (PM) | 64	1000 | LARGE T&R	Yes	NIPDAU	Level-3-260C-168 HR	-40 to 125	F280045PMS
F280045PMSR.B	Active	Production	LQFP (PM) | 64	1000 | LARGE T&R	Yes	NIPDAU	Level-3-260C-168 HR	-40 to 125	F280045PMS
F280045PZS	Active	Production	LQFP (PZ) | 100	90 | JEDEC TRAY (10+1)	Yes	NIPDAU	Level-3-260C-168 HR	-40 to 125	F280045PZS
F280045PZS.B	Active	Production	LQFP (PZ) | 100	90 | JEDEC TRAY (10+1)	Yes	NIPDAU	Level-3-260C-168 HR	-40 to 125	F280045PZS
F280045PZSR	Active	Production	LQFP (PZ) | 100	1000 | LARGE T&R	Yes	NIPDAU	Level-3-260C-168 HR	-40 to 125	F280045PZS
F280045PZSR.B	Active	Production	LQFP (PZ) | 100	1000 | LARGE T&R	Yes	NIPDAU	Level-3-260C-168 HR	-40 to 125	F280045PZS
F280045RSHSR	Active	Production	VQFN (RSH) | 56	2500 | LARGE T&R	Yes	Call TI | Nipdau	Level-3-260C-168 HR	-40 to 125	F280045 RSHS
F280045RSHSR.B	Active	Production	VQFN (RSH) | 56	2500 | LARGE T&R	Yes	NIPDAU	Level-3-260C-168 HR	-40 to 125	F280045 RSHS
F280048CPMQR	Active	Production	LQFP (PM) | 64	1000 | LARGE T&R	Yes	NIPDAU	Level-3-260C-168 HR	-40 to 125	F280048CPMQ
F280048CPMQR.B	Active	Production	LQFP (PM) | 64	1000 | LARGE T&R	Yes	NIPDAU	Level-3-260C-168 HR	-40 to 125	F280048CPMQ
F280048PMQR	Active	Production	LQFP (PM) | 64	1000 | LARGE T&R	Yes	NIPDAU	Level-3-260C-168 HR	-40 to 125	F280048PMQ
F280048PMQR.B	Active	Production	LQFP (PM) | 64	1000 | LARGE T&R	Yes	NIPDAU	Level-3-260C-168 HR	-40 to 125	F280048PMQ
F280049CPMS	Active	Production	LQFP (PM) | 64	160 | JEDEC TRAY (10+1)	Yes	NIPDAU	Level-3-260C-168 HR	-40 to 125	F280049CPMS
F280049CPMS.A	Active	Production	LQFP (PM) | 64	160 | JEDEC TRAY (10+1)	Yes	NIPDAU	Level-3-260C-168 HR	-40 to 125	F280049CPMS
F280049CPMS.B	Active	Production	LQFP (PM) | 64	160 | JEDEC TRAY (10+1)	Yes	NIPDAU	Level-3-260C-168 HR	-40 to 125	F280049CPMS
F280049CPMSR	Active	Production	LQFP (PM) | 64	1000 | LARGE T&R	Yes	NIPDAU	Level-3-260C-168 HR	-40 to 125	F280049CPMS
F280049CPMSR.B	Active	Production	LQFP (PM) | 64	1000 | LARGE T&R	Yes	NIPDAU	Level-3-260C-168 HR	-40 to 125	F280049CPMS

Orderable part number	Status (1)	Material type (2)	Package | Pins	Package qty | Carrier	RoHS (3)	Lead finish/ Ball material (4)	MSL rating/ Peak reflow (5)	Op temp (°C)	Part marking (6)
F280049CPZQR	Active	Production	LQFP (PZ) | 100	1000 | LARGE T&R	Yes	NIPDAU	Level-3-260C-168 HR	-40 to 125	F280049CPZQ
F280049CPZQR.B	Active	Production	LQFP (PZ) | 100	1000 | LARGE T&R	Yes	NIPDAU	Level-3-260C-168 HR	-40 to 125	F280049CPZQ
F280049CPZS	Active	Production	LQFP (PZ) | 100	90 | JEDEC TRAY (10+1)	Yes	NIPDAU	Level-3-260C-168 HR	-40 to 125	F280049CPZS
F280049CPZS.B	Active	Production	LQFP (PZ) | 100	90 | JEDEC TRAY (10+1)	Yes	NIPDAU	Level-3-260C-168 HR	-40 to 125	F280049CPZS
F280049CRSHSR	Active	Production	VQFN (RSH) | 56	2500 | LARGE T&R	Yes	Call TI | Nipdau	Level-3-260C-168 HR	-40 to 125	F280049C RSHS
F280049CRSHSR.A	Active	Production	VQFN (RSH) | 56	2500 | LARGE T&R	Yes	NIPDAU	Level-3-260C-168 HR	-40 to 125	F280049C RSHS
F280049CRSHSR.B	Active	Production	VQFN (RSH) | 56	2500 | LARGE T&R	Yes	NIPDAU	Level-3-260C-168 HR	-40 to 125	F280049C RSHS
F280049CRSHSRG4	Active	Production	VQFN (RSH) | 56	2500 | LARGE T&R	Yes	NIPDAU	Level-3-260C-168 HR	-40 to 125	F280049C RSHS
F280049CRSHSRG4.A	Active	Production	VQFN (RSH) | 56	2500 | LARGE T&R	Yes	NIPDAU	Level-3-260C-168 HR	-40 to 125	F280049C RSHS
F280049CRSHSRG4.B	Active	Production	VQFN (RSH) | 56	2500 | LARGE T&R	Yes	NIPDAU	Level-3-260C-168 HR	-40 to 125	F280049C RSHS
F280049PMS	Active	Production	LQFP (PM) | 64	160 | JEDEC TRAY (10+1)	Yes	NIPDAU	Level-3-260C-168 HR	-40 to 125	F280049PMS
F280049PMS.B	Active	Production	LQFP (PM) | 64	160 | JEDEC TRAY (10+1)	Yes	NIPDAU	Level-3-260C-168 HR	-40 to 125	F280049PMS
F280049PMSR	Active	Production	LQFP (PM) | 64	1000 | LARGE T&R	Yes	NIPDAU	Level-3-260C-168 HR	-40 to 125	F280049PMS
F280049PMSR.B	Active	Production	LQFP (PM) | 64	1000 | LARGE T&R	Yes	NIPDAU	Level-3-260C-168 HR	-40 to 125	F280049PMS
F280049PZQ	Active	Production	LQFP (PZ) | 100	90 | JEDEC TRAY (10+1)	Yes	NIPDAU	Level-3-260C-168 HR	-40 to 125	F280049PZQ
F280049PZQ.B	Active	Production	LQFP (PZ) | 100	90 | JEDEC TRAY (10+1)	Yes	NIPDAU	Level-3-260C-168 HR	-40 to 125	F280049PZQ
F280049PZQR	Active	Production	LQFP (PZ) | 100	1000 | LARGE T&R	Yes	NIPDAU	Level-3-260C-168 HR	-40 to 125	F280049PZQ
F280049PZQR.B	Active	Production	LQFP (PZ) | 100	1000 | LARGE T&R	Yes	NIPDAU	Level-3-260C-168 HR	-40 to 125	F280049PZQ
F280049PZS	Active	Production	LQFP (PZ) | 100	90 | JEDEC TRAY (10+1)	Yes	NIPDAU	Level-3-260C-168 HR	-40 to 125	F280049PZS
F280049PZS.A	Active	Production	LQFP (PZ) | 100	90 | JEDEC TRAY (10+1)	Yes	NIPDAU	Level-3-260C-168 HR	-40 to 125	F280049PZS

Orderable part number	Status (1)	Material type (2)	Package | Pins	Package qty | Carrier	RoHS (3)	Lead finish/ Ball material (4)	MSL rating/ Peak reflow (5)	Op temp (°C)	Part marking (6)
F280049PZS.B	Active	Production	LQFP (PZ) | 100	90 | JEDEC TRAY (10+1)	Yes	NIPDAU	Level-3-260C-168 HR	-40 to 125	F280049PZS
F280049PZSR	Active	Production	LQFP (PZ) | 100	1000 | LARGE T&R	Yes	NIPDAU	Level-3-260C-168 HR	-40 to 125	F280049PZS
F280049PZSR.B	Active	Production	LQFP (PZ) | 100	1000 | LARGE T&R	Yes	NIPDAU	Level-3-260C-168 HR	-40 to 125	F280049PZS
F280049RSHSR	Active	Production	VQFN (RSH) | 56	2500 | LARGE T&R	Yes	Call TI | Nipdau	Level-3-260C-168 HR	-40 to 125	F280049 RSHS
F280049RSHSR.B	Active	Production	VQFN (RSH) | 56	2500 | LARGE T&R	Yes	NIPDAU	Level-3-260C-168 HR	-40 to 125	F280049 RSHS
F280049RSHSRG4	Active	Production	VQFN (RSH) | 56	2500 | LARGE T&R	Yes	NIPDAU	Level-3-260C-168 HR	-40 to 125	F280049 RSHS
F280049RSHSRG4.B	Active	Production	VQFN (RSH) | 56	2500 | LARGE T&R	Yes	NIPDAU	Level-3-260C-168 HR	-40 to 125	F280049 RSHS

(1) **Status:** For more details on status, see our product life cycle.

(2) **Material type:** When designated, preproduction parts are prototypes/experimental devices, and are not yet approved or released for full production. Testing and final process, including without limitation quality assurance, reliability performance testing, and/or process qualification, may not yet be complete, and this item is subject to further changes or possible discontinuation. If available for ordering, purchases will be subject to an additional waiver at checkout, and are intended for early internal evaluation purposes only. These items are sold without warranties of any kind.

(3) **RoHS values:** Yes, No, RoHS Exempt. See the TI RoHS Statement for additional information and value definition.

(4) **Lead finish/Ball material:** Parts may have multiple material finish options. Finish options are separated by a vertical ruled line. Lead finish/Ball material values may wrap to two lines if the finish value exceeds the maximum column width.

(5) **MSL rating/Peak reflow:** The moisture sensitivity level ratings and peak solder (reflow) temperatures. In the event that a part has multiple moisture sensitivity ratings, only the lowest level per JEDEC standards is shown. Refer to the shipping label for the actual reflow temperature that will be used to mount the part to the printed circuit board.

(6) **Part marking:** There may be an additional marking, which relates to the logo, the lot trace code information, or the environmental category of the part.

Multiple part markings will be inside parentheses. Only one part marking contained in parentheses and separated by a "~" will appear on a part. If a line is indented then it is a continuation of the previous line and the two combined represent the entire part marking for that device.

Important Information and Disclaimer: The information provided on this page represents TI's knowledge and belief as of the date that it is provided. TI bases its knowledge and belief on information provided by third parties, and makes no representation or warranty as to the accuracy of such information. Efforts are underway to better integrate information from third parties. TI has taken and continues to take reasonable steps to provide representative

and accurate information but may not have conducted destructive testing or chemical analysis on incoming materials and chemicals. TI and TI suppliers consider certain information to be proprietary, and thus CAS numbers and other limited information may not be available for release.

In no event shall TI's liability arising out of such information exceed the total purchase price of the TI part(s) at issue in this document sold by TI to Customer on an annual basis.

OTHER QUALIFIED VERSIONS OF TMS320F280041, TMS320F280041-Q1, TMS320F280041C, TMS320F280041C-Q1, TMS320F280049, TMS320F280049-Q1, TMS320F280049C, TMS320F280049C-Q1 :

- Catalog : TMS320F280041, TMS320F280041C, TMS320F280049, TMS320F280049C

- Automotive : TMS320F280041-Q1, TMS320F280041C-Q1, TMS320F280049-Q1, TMS320F280049C-Q1

NOTE: Qualified Version Definitions:

- Catalog - TI's standard catalog product

- Automotive - Q100 devices qualified for high-reliability automotive applications targeting zero defects

TAPE AND REEL INFORMATION

REEL DIMENSIONS

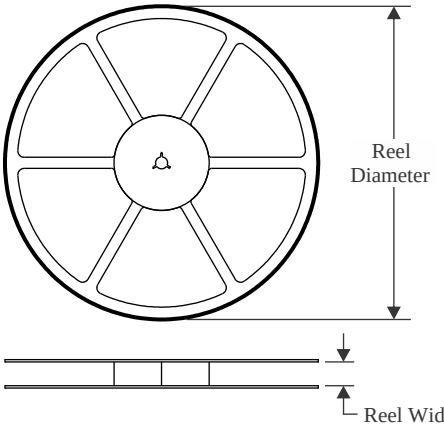

TAPE DIMENSIONS

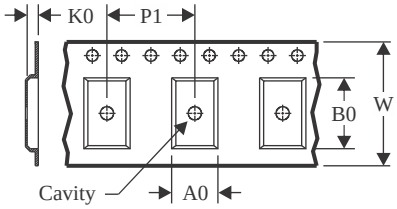

A0	Dimension designed to accommodate the component width
B0	Dimension designed to accommodate the component length
K0	Dimension designed to accommodate the component thickness
W	Overall width of the carrier tape
P1	Pitch between successive cavity centers

QUADRANT ASSIGNMENTS FOR PIN 1 ORIENTATION IN TAPE

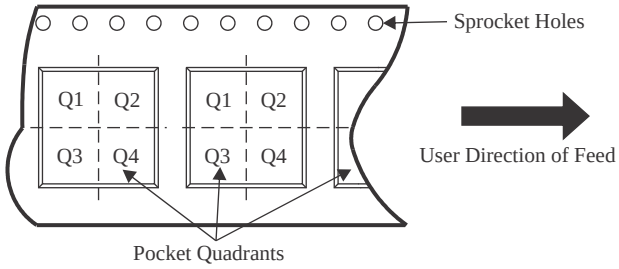

*All dimensions are nominal

Device	Package Type	Package Drawing	Pins	SPQ	Reel Diameter (mm)	Reel Width W1 (mm)	A0 (mm)	B0 (mm)	K0 (mm)	P1 (mm)	W (mm)	Pin1 Quadrant
F280040CPMQR	LQFP	PM	64	1000	330.0	24.4	12.5	12.5	2.2	16.0	24.0	Q2
F280040PMQR	LQFP	PM	64	1000	330.0	24.4	12.5	12.5	2.2	16.0	24.0	Q2
F280041CPZQR	LQFP	PZ	100	1000	330.0	32.4	16.9	16.9	2.1	24.0	32.0	Q2
F280041CPZQR	LQFP	PZ	100	1000	330.0	32.4	16.9	16.9	2.0	24.0	32.0	Q2
F280041PMSR	LQFP	PM	64	1000	330.0	24.4	12.5	12.5	2.2	16.0	24.0	Q2
F280041PZQR	LQFP	PZ	100	1000	330.0	32.4	16.9	16.9	2.0	24.0	32.0	Q2
F280041PZQR	LQFP	PZ	100	1000	330.0	32.4	16.9	16.9	2.1	24.0	32.0	Q2
F280041PZSR	LQFP	PZ	100	1000	330.0	32.4	16.9	16.9	2.1	24.0	32.0	Q2
F280041PZSR	LQFP	PZ	100	1000	330.0	32.4	16.9	16.9	2.0	24.0	32.0	Q2
F280041RSHSR	VQFN	RSH	56	2500	330.0	16.4	7.3	7.3	1.1	12.0	16.0	Q2
F280045PMSR	LQFP	PM	64	1000	330.0	24.4	12.5	12.5	2.2	16.0	24.0	Q2
F280045PZSR	LQFP	PZ	100	1000	330.0	32.4	16.9	16.9	2.0	24.0	32.0	Q2
F280045PZSR	LQFP	PZ	100	1000	330.0	32.4	16.9	16.9	2.1	24.0	32.0	Q2
F280048CPMQR	LQFP	PM	64	1000	330.0	24.4	12.5	12.5	2.2	16.0	24.0	Q2
F280048PMQR	LQFP	PM	64	1000	330.0	24.4	12.5	12.5	2.2	16.0	24.0	Q2
F280049CPMSR	LQFP	PM	64	1000	330.0	24.4	12.5	12.5	2.2	16.0	24.0	Q2

Device	Package Type	Package Drawing	Pins	SPQ	Reel Diameter (mm)	Reel Width W1 (mm)	A0 (mm)	B0 (mm)	K0 (mm)	P1 (mm)	W (mm)	Pin1 Quadrant
F280049CPZQR	LQFP	PZ	100	1000	330.0	32.4	16.9	16.9	2.0	24.0	32.0	Q2
F280049CPZQR	LQFP	PZ	100	1000	330.0	32.4	16.9	16.9	2.1	24.0	32.0	Q2
F280049CRSHSRG4	VQFN	RSH	56	2500	330.0	16.4	7.3	7.3	1.1	12.0	16.0	Q2
F280049PMSR	LQFP	PM	64	1000	330.0	24.4	12.5	12.5	2.2	16.0	24.0	Q2
F280049PZQR	LQFP	PZ	100	1000	330.0	32.4	16.9	16.9	2.0	24.0	32.0	Q2
F280049PZQR	LQFP	PZ	100	1000	330.0	32.4	16.9	16.9	2.1	24.0	32.0	Q2
F280049PZSR	LQFP	PZ	100	1000	330.0	32.4	16.9	16.9	2.0	24.0	32.0	Q2
F280049PZSR	LQFP	PZ	100	1000	330.0	32.4	16.9	16.9	2.1	24.0	32.0	Q2
F280049RSHSRG4	VQFN	RSH	56	2500	330.0	16.4	7.3	7.3	1.1	12.0	16.0	Q2

TAPE AND REEL BOX DIMENSIONS

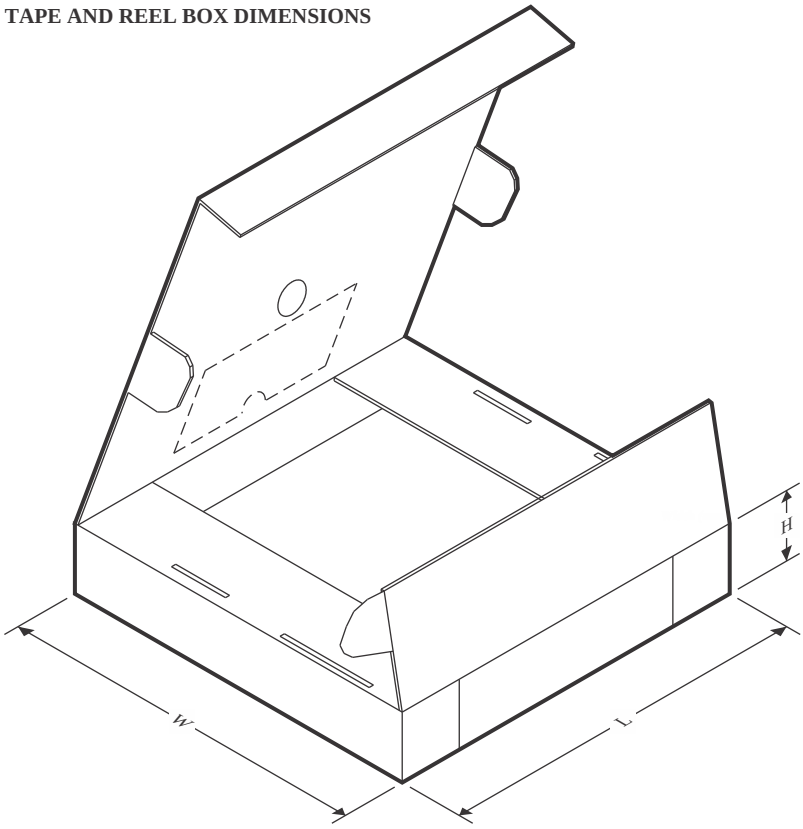

*All dimensions are nominal

Device	Package Type	Package Drawing	Pins	SPQ	Length (mm)	Width (mm)	Height (mm)
F280040CPMQR	LQFP	PM	64	1000	336.6	336.6	41.3
F280040PMQR	LQFP	PM	64	1000	336.6	336.6	41.3
F280041CPZQR	LQFP	PZ	100	1000	367.0	367.0	55.0
F280041CPZQR	LQFP	PZ	100	1000	367.0	367.0	55.0
F280041PMSR	LQFP	PM	64	1000	336.6	336.6	41.3
F280041PZQR	LQFP	PZ	100	1000	367.0	367.0	55.0
F280041PZQR	LQFP	PZ	100	1000	367.0	367.0	55.0
F280041PZSR	LQFP	PZ	100	1000	367.0	367.0	55.0
F280041PZSR	LQFP	PZ	100	1000	367.0	367.0	55.0
F280041RSHSR	VQFN	RSH	56	2500	336.6	336.6	31.8
F280045PMSR	LQFP	PM	64	1000	336.6	336.6	41.3
F280045PZSR	LQFP	PZ	100	1000	367.0	367.0	55.0
F280045PZSR	LQFP	PZ	100	1000	367.0	367.0	55.0
F280048CPMQR	LQFP	PM	64	1000	336.6	336.6	41.3
F280048PMQR	LQFP	PM	64	1000	336.6	336.6	41.3
F280049CPMSR	LQFP	PM	64	1000	336.6	336.6	41.3
F280049CPZQR	LQFP	PZ	100	1000	367.0	367.0	55.0
F280049CPZQR	LQFP	PZ	100	1000	367.0	367.0	55.0

Device	Package Type	Package Drawing	Pins	SPQ	Length (mm)	Width (mm)	Height (mm)
F280049CRSHSRG4	VQFN	RSH	56	2500	336.6	336.6	31.8
F280049PMSR	LQFP	PM	64	1000	336.6	336.6	41.3
F280049PZQR	LQFP	PZ	100	1000	367.0	367.0	55.0
F280049PZQR	LQFP	PZ	100	1000	367.0	367.0	55.0
F280049PZSR	LQFP	PZ	100	1000	367.0	367.0	55.0
F280049PZSR	LQFP	PZ	100	1000	367.0	367.0	55.0
F280049RSHSRG4	VQFN	RSH	56	2500	336.6	336.6	31.8

PACKAGE OUTLINE

PM0064A

LQFP - 1.6 mm max height

PLASTIC QUAD FLATPACK

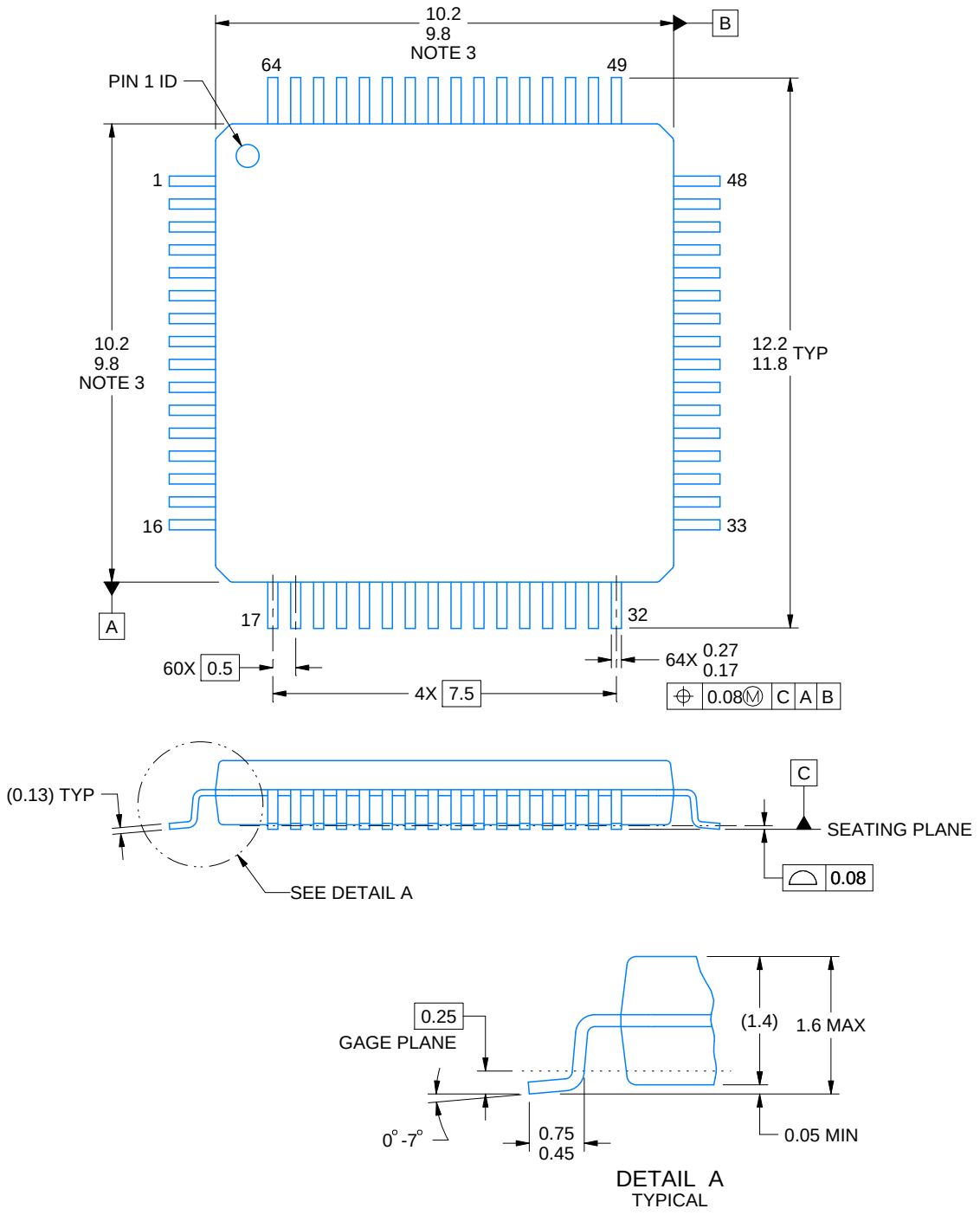

4215162/A 03/2017

NOTES:

1. All linear dimensions are in millimeters. Any dimensions in parenthesis are for reference only. Dimensioning and tolerancing per ASME Y14.5M.
2. This drawing is subject to change without notice.
3. This dimension does not include mold flash, protrusions, or gate burrs. Mold flash, protrusions, or gate burrs shall not exceed 0.15 mm per side.
4. Reference JEDEC registration MS-026.

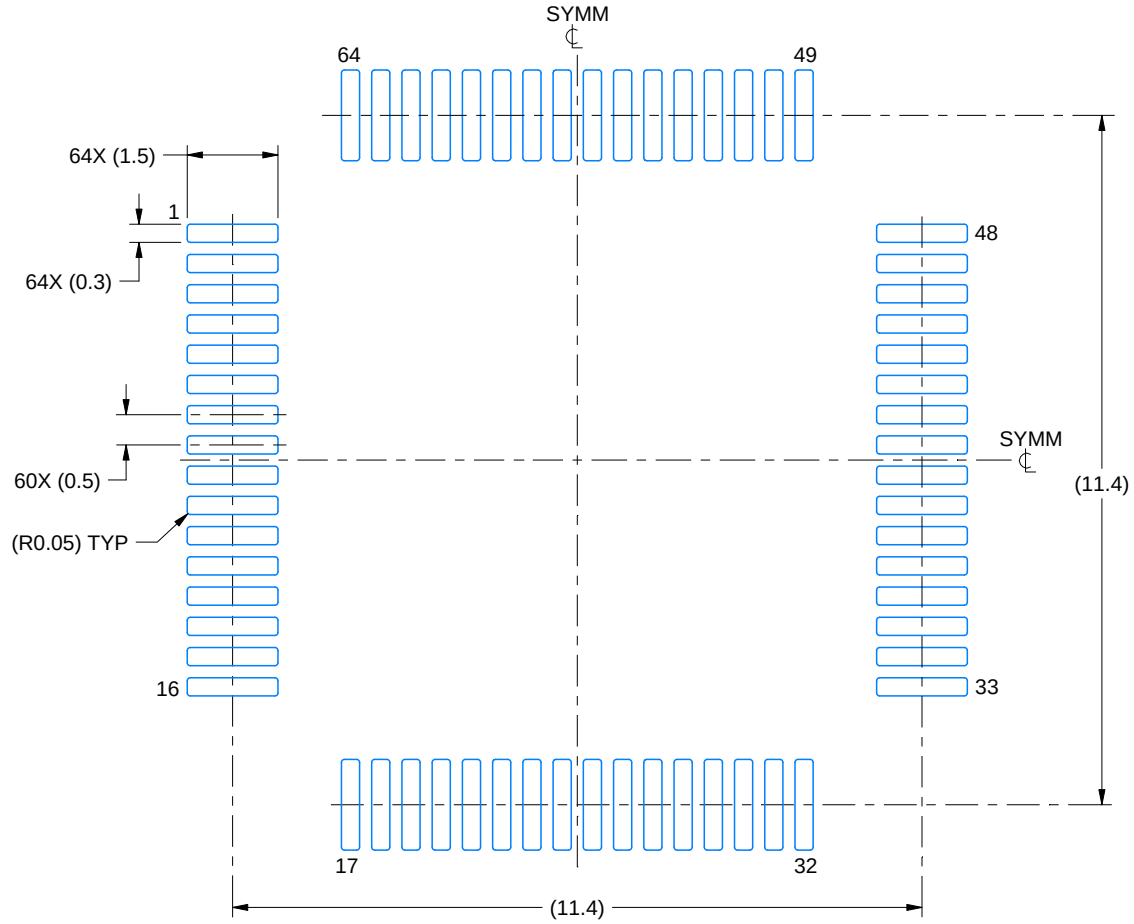

LAND PATTERN EXAMPLE
EXPOSED METAL SHOWN
SCALE:8X

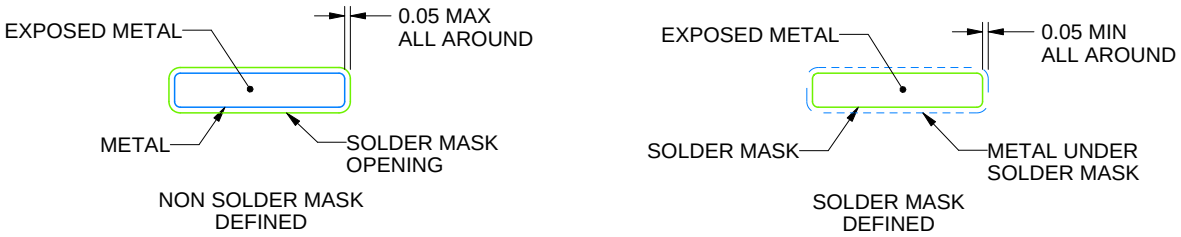

SOLDER MASK DETAILS

4215162/A 03/2017

NOTES: (continued)

5. Publication IPC-7351 may have alternate designs.
6. Solder mask tolerances between and around signal pads can vary based on board fabrication site.
7. For more information, see Texas Instruments literature number SLMA004 (www.ti.com/lit/slma004).

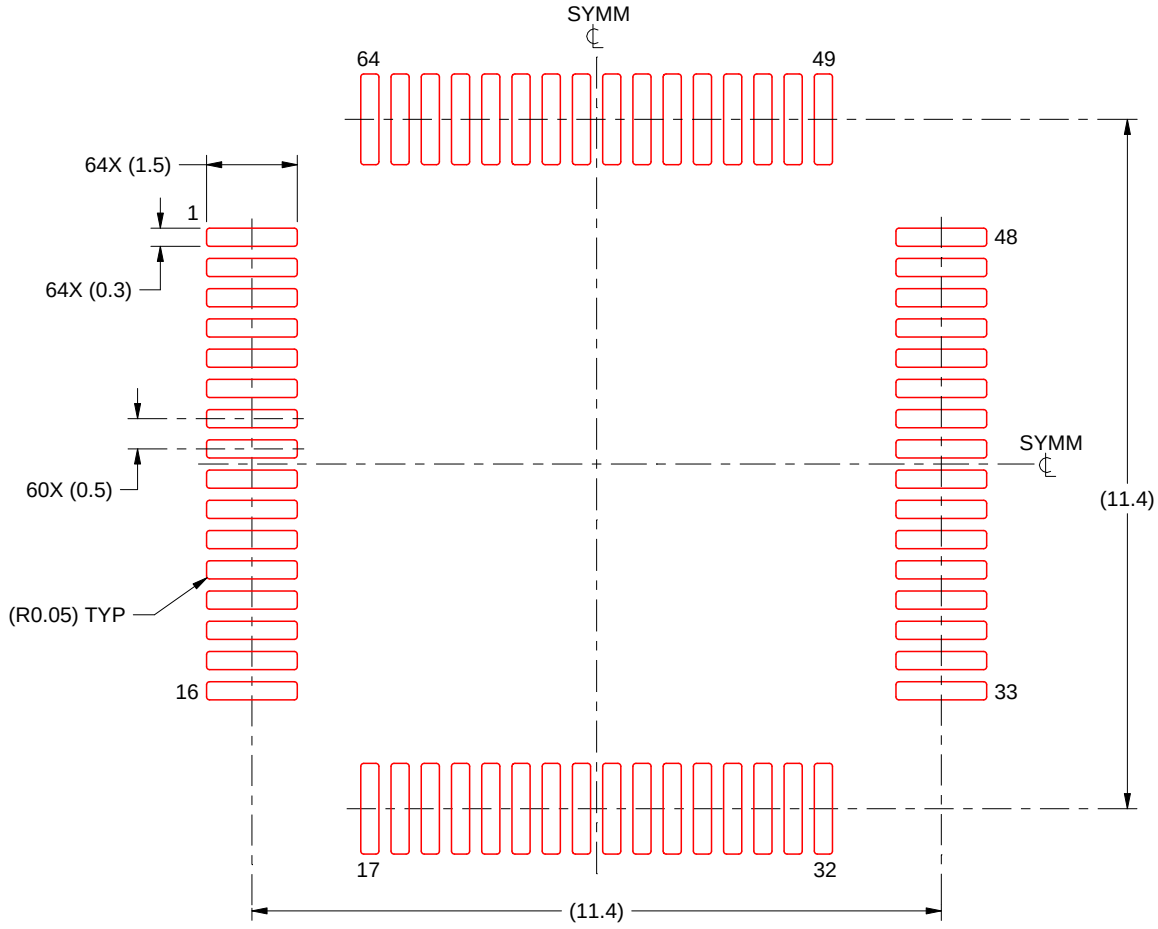

SOLDER PASTE EXAMPLE
BASED ON 0.125 mm THICK STENCIL
SCALE:8X

4215162/A 03/2017

NOTES: (continued)

8. Laser cutting apertures with trapezoidal walls and rounded corners may offer better paste release. IPC-7525 may have alternate design recommendations.
9. Board assembly site may have different recommendations for stencil design.

GENERIC PACKAGE VIEW

RSH 56

VQFN - 1 mm max height

PLASTIC QUAD FLATPACK - NO LEAD

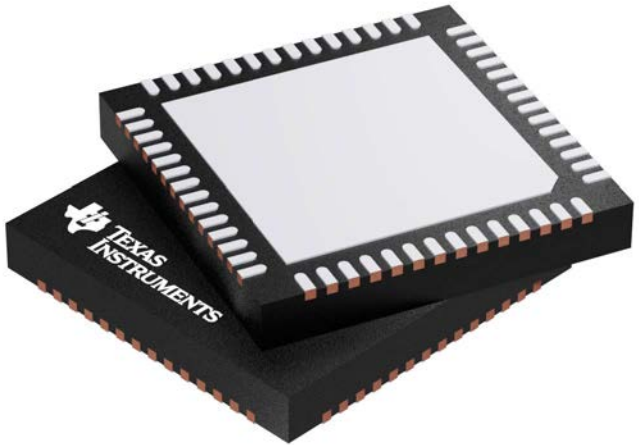

Images above are just a representation of the package family, actual package may vary.
Refer to the product data sheet for package details.

4207513/D



RSH0056D

VQFN - 1 mm max height

VQFN

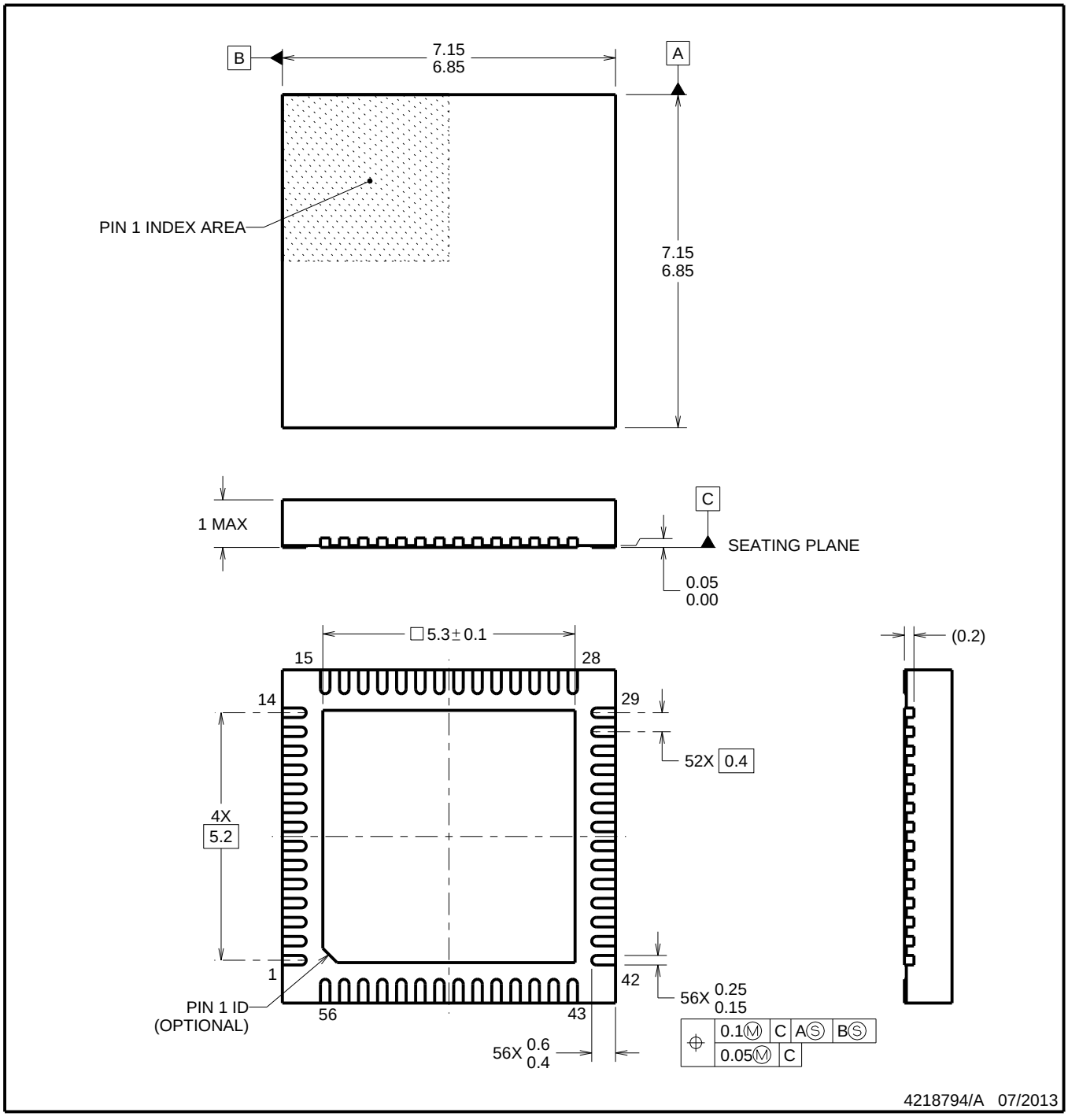

NOTES:

1. All linear dimensions are in millimeters. Dimensions in parenthesis are for reference only. Dimensioning and tolerancing per ASME Y14.5M.

2. This drawing is subject to change without notice.

3. The package thermal pad must be soldered to the printed circuit board for thermal and mechanical performance.

RSH0056D VQFN - 1 mm max height

VQFN

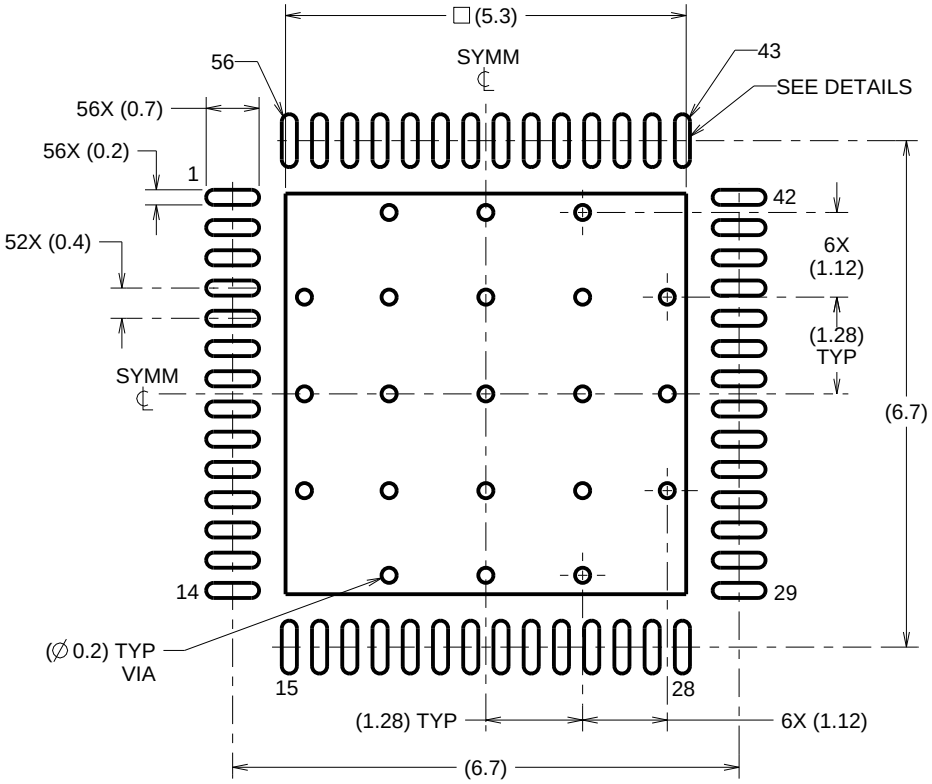

LAND PATTERN EXAMPLE
SCALE:10X

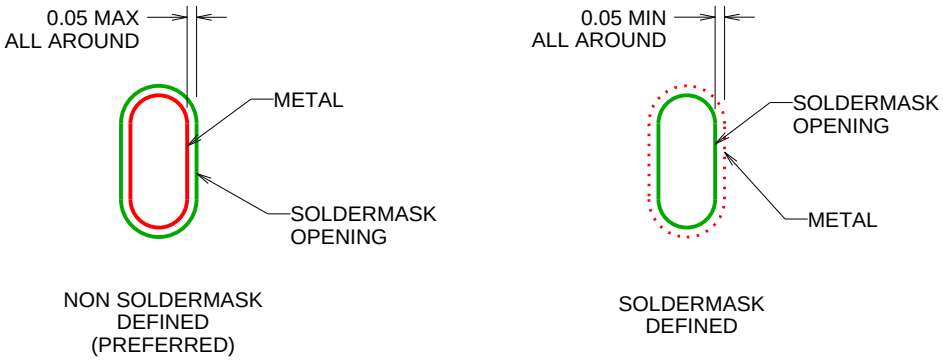

SOLDERMASK DETAILS

4218794/A 07/2013

NOTES: (continued)

4. This package is designed to be soldered to a thermal pad on the board. For more information, refer to QFN/SON PCB application note in literature No. SLUA271 (www.ti.com/lit/slua271).

RSH0056D VQFN - 1 mm max height

VQFN

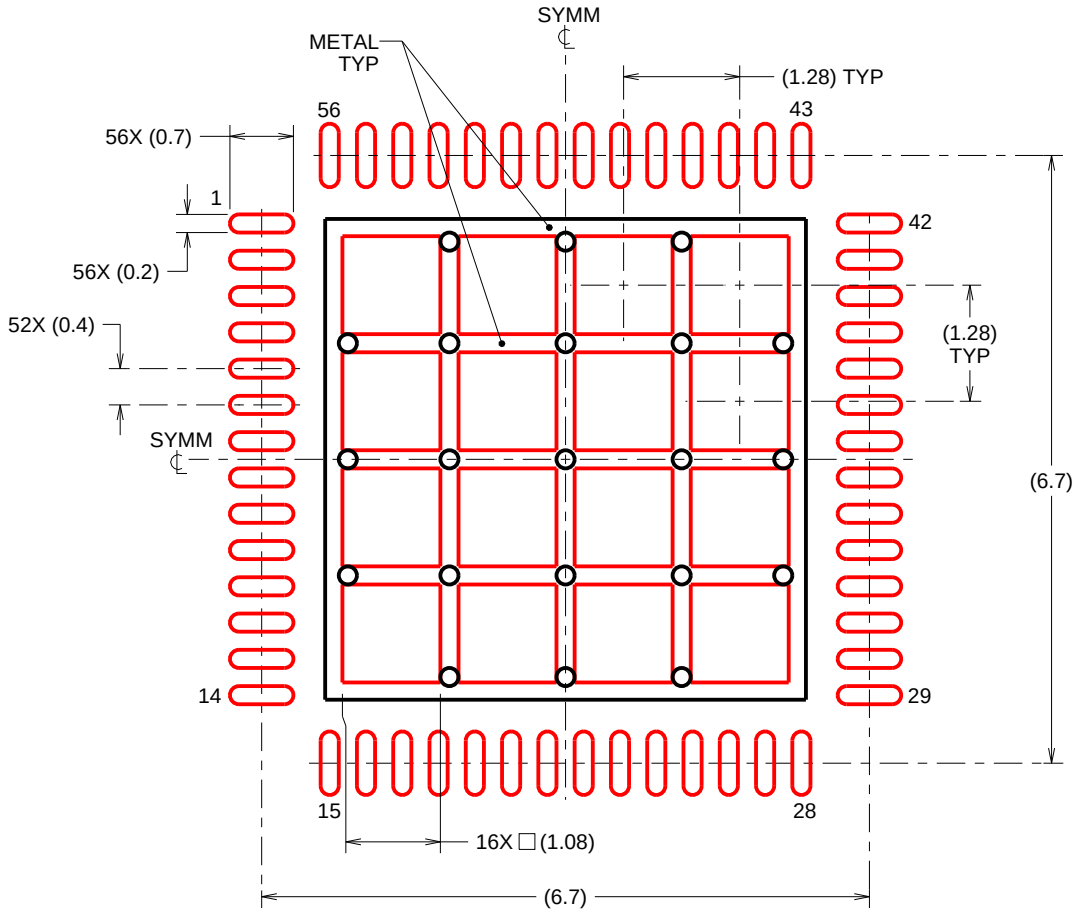

SOLDERPASTE EXAMPLE
BASED ON 0.1mm THICK STENCIL

EXPOSED PAD
67% PRINTED SOLDER COVERAGE BY AREA
SCALE:12X

4218794/A 07/2013

NOTES: (continued)

5. Laser cutting apertures with trapezoidal walls and rounded corners may offer better paste release. IPC-7525 may have alternate design recommendations.

PACKAGE OUTLINE

PZ0100A

LQFP - 1.6 mm max height

PLASTIC QUAD FLATPACK

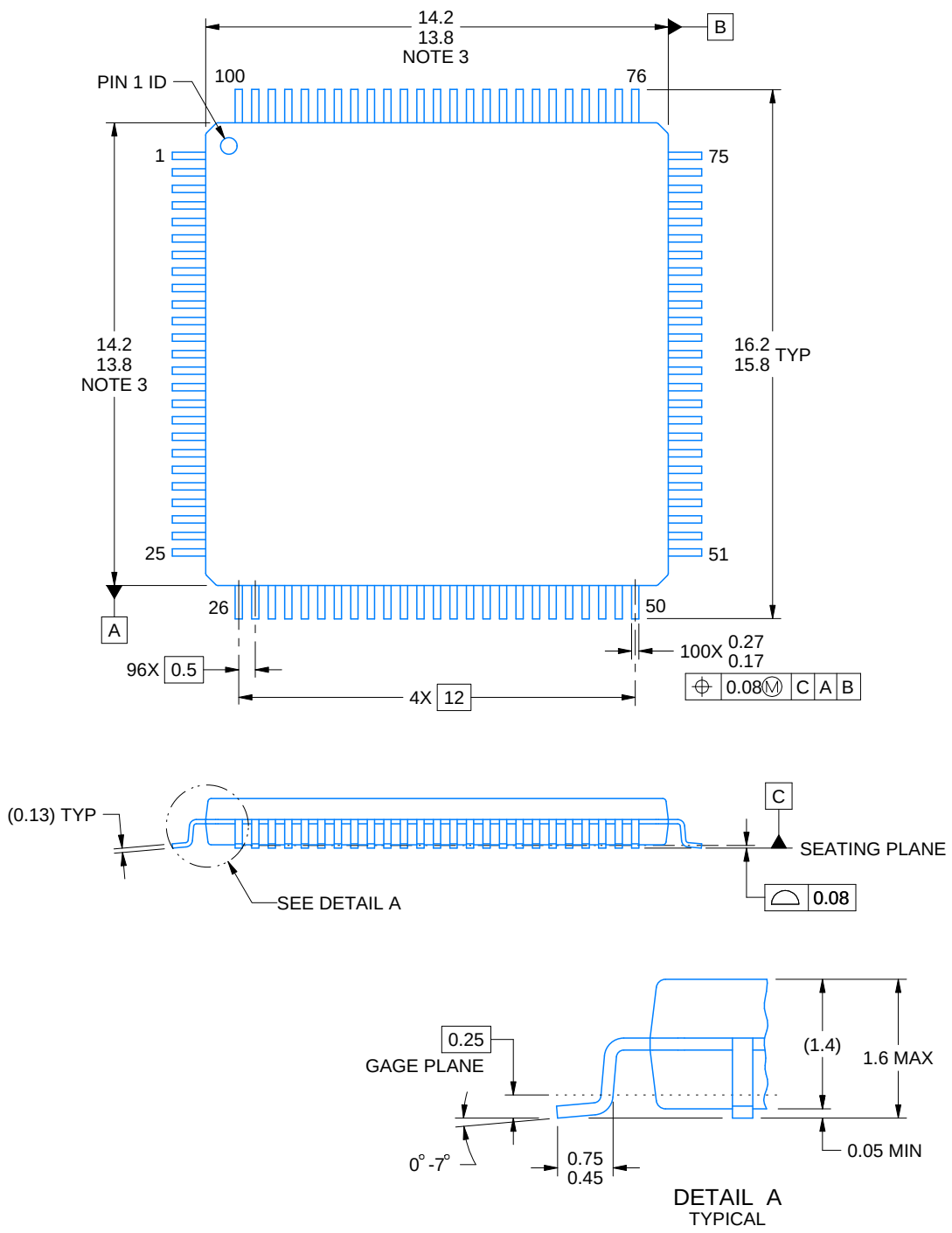

NOTES:

1. All linear dimensions are in millimeters. Any dimensions in parenthesis are for reference only. Dimensioning and tolerancing per ASME Y14.5M.
2. This drawing is subject to change without notice.
3. This dimension does not include mold flash, protrusions, or gate burrs. Mold flash, protrusions, or gate burrs shall not exceed 0.15 mm per side.
4. Reference JEDEC registration MS-026.

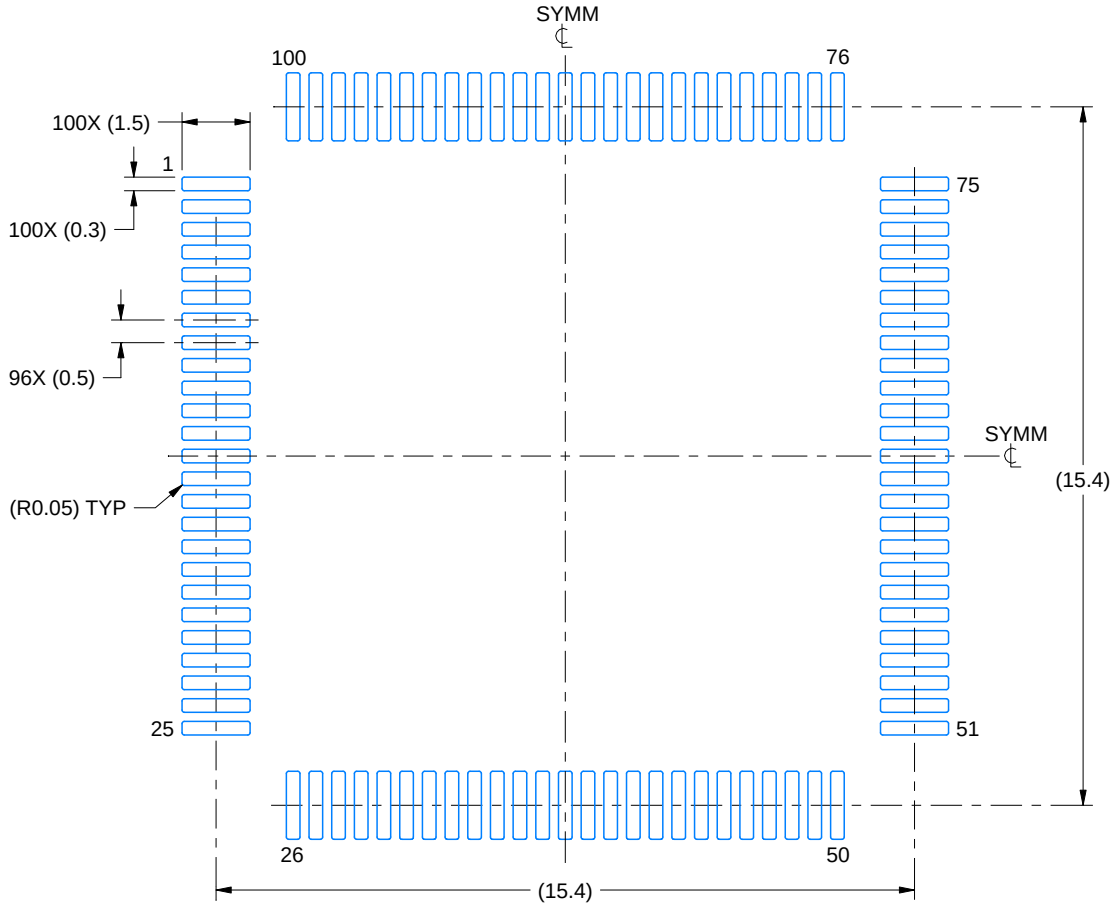

LAND PATTERN EXAMPLE
EXPOSED METAL SHOWN
SCALE:6X

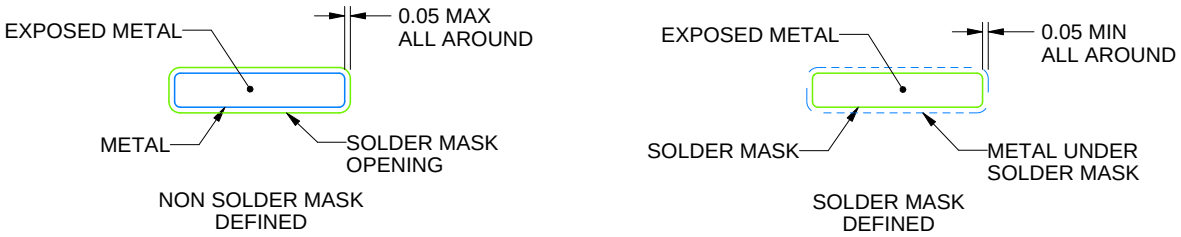

SOLDER MASK DETAILS

4215169/A 03/2017

NOTES: (continued)

5. Publication IPC-7351 may have alternate designs.
6. Solder mask tolerances between and around signal pads can vary based on board fabrication site.
7. For more information, see Texas Instruments literature number SLMA004 (www.ti.com/lit/slma004).

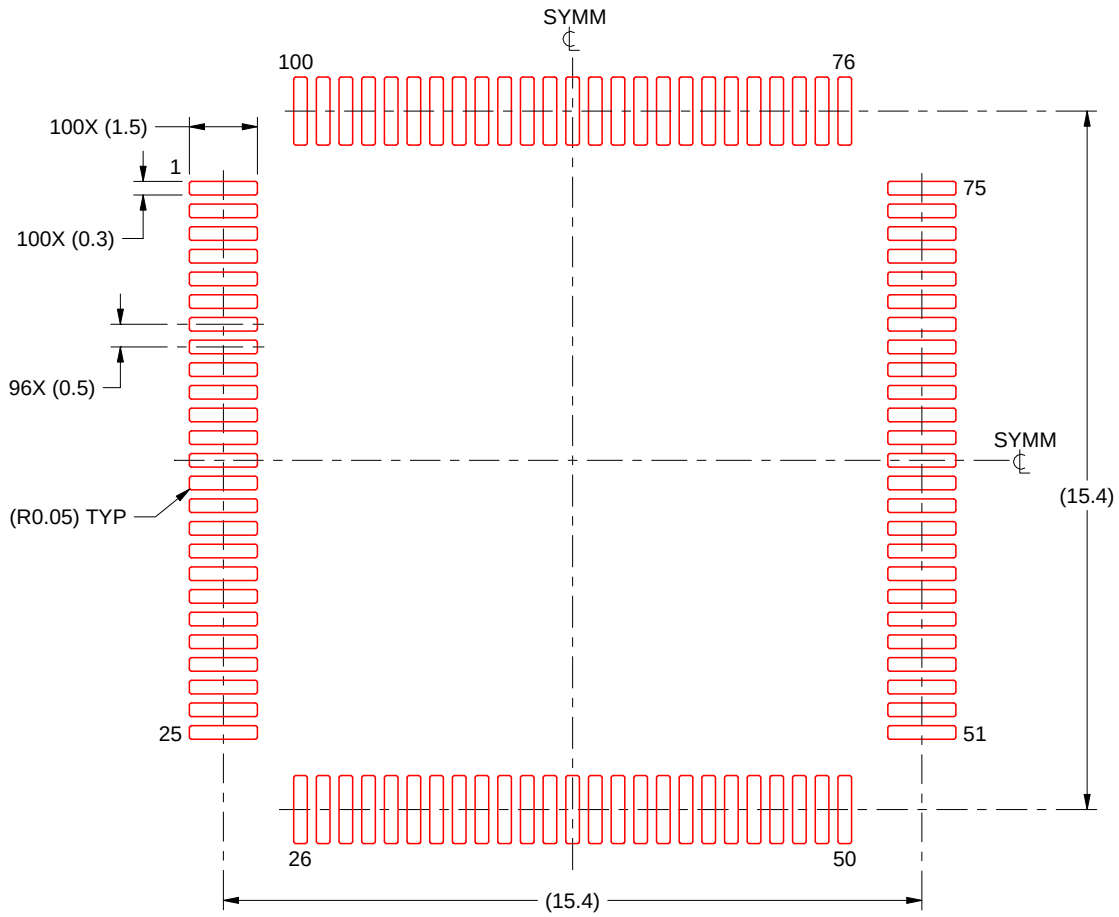

SOLDER PASTE EXAMPLE
BASED ON 0.125 mm THICK STENCIL
SCALE:6X

4215169/A 03/2017

NOTES: (continued)

8. Laser cutting apertures with trapezoidal walls and rounded corners may offer better paste release. IPC-7525 may have alternate design recommendations.
9. Board assembly site may have different recommendations for stencil design.

IMPORTANT NOTICE AND DISCLAIMER

TI PROVIDES TECHNICAL AND RELIABILITY DATA (INCLUDING DATASHEETS), DESIGN RESOURCES (INCLUDING REFERENCE DESIGNS), APPLICATION OR OTHER DESIGN ADVICE, WEB TOOLS, SAFETY INFORMATION, AND OTHER RESOURCES “AS IS” AND WITH ALL FAULTS, AND DISCLAIMS ALL WARRANTIES, EXPRESS AND IMPLIED, INCLUDING WITHOUT LIMITATION ANY IMPLIED WARRANTIES OF MERCHANTABILITY, FITNESS FOR A PARTICULAR PURPOSE OR NON-INFRINGEMENT OF THIRD PARTY INTELLECTUAL PROPERTY RIGHTS.

These resources are intended for skilled developers designing with TI products. You are solely responsible for (1) selecting the appropriate TI products for your application, (2) designing, validating and testing your application, and (3) ensuring your application meets applicable standards, and any other safety, security, regulatory or other requirements.

These resources are subject to change without notice. TI grants you permission to use these resources only for development of an application that uses the TI products described in the resource. Other reproduction and display of these resources is prohibited. No license is granted to any other TI intellectual property right or to any third party intellectual property right. TI disclaims responsibility for, and you fully indemnify TI and its representatives against any claims, damages, costs, losses, and liabilities arising out of your use of these resources.

TI’s products are provided subject to TI’s Terms of Sale, TI’s General Quality Guidelines, or other applicable terms available either on ti.com or provided in conjunction with such TI products. TI’s provision of these resources does not expand or otherwise alter TI’s applicable warranties or warranty disclaimers for TI products. Unless TI explicitly designates a product as custom or customer-specified, TI products are standard, catalog, general purpose devices.

TI objects to and rejects any additional or different terms you may propose.

Copyright © 2026, Texas Instruments Incorporated

Last updated 10/2025